WeatherMaster® 50P030-100 Single-Package Electric Heating and Electric Cooling Units with *Comfort*Link Controls

Installation Instructions

CONTENTS

Page

GENERAL 1
SAFETY CONSIDERATIONS 1
INSTALLATION 2
Step 1 — Perform Jobsite Survey 2
Step 2 — Place Unit 2
Step 3 — Roof Mount Unit 2
Step 4 — Slab Mount Unit 2
Step 5 — Install Curb Gasketing 2
Step 6 — Field-Fabricate Ductwork 16
Step 7 — Rig Unit 16
Step 8 — Connect Condensate Drain 21
Step 9 — Install Outdoor Hoods 33
Step 10 — Install Economizer Hoods (Units with Optional High-Capacity Power Exhaust) 34
Step 11 — Route Field Wiring 36
Step 12 — Make Field Electrical Connections 36
Step 13 — Connect Air Pressure Tubing 169
Step 14 — Supply-Fan Shipping Brackets 172
Step 15 — Remove Optional Return/Exhaust-Fan Shipping Brackets 173
Step 16 — Install Supply-Air Thermistors (Optional SCR Electric Heat Units Only) 173
Step 17 — Greenspeed/Low Ambient Control (Optional) 173
Step 18 — Install Unit Accessories 174
CONTROLS INSTALLATION 174
Constant Volume (CV) Units 174
Variable Air Volume (VAV) Units 174
Option and Accessory Control Wiring 176
Carrier Comfort Network® Interface 176
Optional UPC Open Installation 181
Smoke Control Modes 184

GENERAL

This installation instruction contains basic unit installation information, including installation of thermostats and remote temperature sensors which are required on all units.

For additional information, refer to the separate Controls and Troubleshooting literature.

Size 075-100 units are available with optional factory-installed integral economizer and high-capacity power exhaust.

SAFETY CONSIDERATIONS

Installation and servicing of air-conditioning equipment can be hazardous due to system pressure and electrical components. Only trained and qualified service personnel should install, repair, or service air-conditioning equipment.

Untrained personnel can perform basic maintenance functions of cleaning coils and filters and replacing filters. All other operations should be performed by trained service personnel. When working on air-conditioning equipment, observe precautions in the literature, tags and labels attached to the unit, and other safety precautions that may apply.

Follow all safety codes, including ANSI (American National Standards Institute) Z223.1. Wear safety glasses and work gloves. Use quenching cloth for unbrazing operations. Have fire extinguisher available for all brazing operations.

⚠ WARNING

Electrical shock can cause personal injury and death. Shut off all power to this equipment during installation. There may be more than one disconnect switch. Tag all disconnect locations to alert others not to restore power until work is completed.

⚠ WARNING

Do not store or use gasoline or other flammable vapors and liquids in the vicinity of this or any other appliance.

⚠ WARNING

Improper installation, adjustment, alteration, service, or maintenance can cause injury or property damage. Refer to this manual. For assistance or additional information, consult a qualified installer, service agency, or the gas supplier.

⚠ DANGER

DO NOT USE TORCH to remove any component. System contains oil and refrigerant under pressure.

To remove a component, wear protective gloves and goggles and proceed as follows:

a. Shut off electrical power to unit.
b. Recover refrigerant to relieve all pressure from system using both high-pressure and low pressure ports.
c. Traces of vapor should be displaced with nitrogen and the work area should be well ventilated. Refrigerant in contact with an open flame produces toxic gases.
d. Cut component connection tubing with tubing cutter and remove component from unit. Use a pan to catch any oil that may come out of the lines and as a gage for how much oil to add to the system.
e. Carefully un-sweat remaining tubing stubs when necessary. Oil can ignite when exposed to torch flame.

Failure to follow these procedures may result in personal injury or death.

Manufacturer reserves the right to discontinue, or change at any time, specifications or designs without notice and without incurring obligations.

⚠ CAUTION

DO NOT re-use compressor oil or any oil that has been exposed to the atmosphere. Dispose of oil per local codes and regulations. DO NOT leave refrigerant system open to air any longer than the actual time required to service the equipment. Seal circuits being serviced and charge with dry nitrogen to prevent oil contamination when timely repairs cannot be completed. Failure to follow these procedures may result in damage to equipment.

⚠ WARNING

CARBON-MONOXIDE POISONING HAZARD

Failure to follow instructions could result in severe personal injury or death due to carbon-monoxide poisoning, if combustion products infiltrate into the building.

Check that all openings in the outside wall around the vent (and air intake) pipe(s) are sealed to prevent infiltration of combustion products into the building.

Check that furnace vent (and air intake) terminal(s) are not obstructed in any way during all seasons.

⚠ AVERTISSEMENT

RISQUE D'INTOXICATION AU MONOXYDE DE CARBONE

Si ces directives ne sont pas suivies, cela peut entraîner des blessures graves ou une intoxication au monoxyde de carbone pouvant causer la mort, si des produits de combustion s'infiltrent dans le bâtiment.

Vérifier que toutes les ouvertures pratiquées dans le mur extérieur autour du ou des tuyaux d'évent (et de la prise d'air) sont scellées de manière à empêcher l'infiltration de produits de combustion dans le bâtiment.

Veiller à ce que la ou les sorties de l'évent de l'appareil de chauffage (et la prise d'air) ne soient, en aucune façon, obstruées, quelle que soit la saison.

INSTALLATION

Step 1 — Perform Jobsite Survey

Complete the following checks before installation.

1. Consult local building codes and the NEC (National Electrical Code) (ANSI/NFPA [National Fire Protection Association] 70) for special installation requirements.
2. Determine unit location (from project plans) or select unit location.
3. Check for possible overhead obstructions which may interfere with unit lifting or rigging.

⚠ CAUTION

Do not lift unit with forklift truck. Move unit with overhead rigging only. Damage to unit may result.

Step 2 — Place Unit

Inspect unit for transportation damage. File claim with transportation agency.

Provide clearance around and above unit for airflow, safety, and service access. Do not restrict top (area above condenser fans) in any way. Allow at least 6 ft on all sides for rated performance, code compliance, and service. On units equipped with power exhaust option, high velocity air is exhausted out the hood. Unit should be positioned with at least 10 ft clearance between the exhaust hood and any obstruction.

Check unit dimensional drawings for unit arrangement and minimum performance and service clearances.

Do not install unit in an indoor location. Do not locate air inlets near exhaust vents or other sources of contaminated air.

Although unit is weatherproof, guard against water from higher level runoff and overhangs.

Level by using unit frame as a reference. Physical data is shown in Tables 1-12.

Step 3 — Roof Mount Unit

Check building codes for weight distribution requirements. Unit weight is shown in Tables 1-3. Unit may be mounted on class A, B, or C roofing material.

ROOF CURB

Assemble and install as described in instructions shipped with the accessory. Accessory roof curb and information required to field fabricate a roof curb is shown in Fig. 1-5. Install insulation, cant strips, roofing and counter flashing as required. For unit condensate drain to function properly, curb must be level or within tolerances shown in Fig. 1-5.

STEEL BEAMS

If roof curb is not used, support unit with steel beams along its entire length and then support steel as required. As a minimum, unit must be supported across its width at each lifting lug location.

Step 4 — Slab Mount Unit

Provide a level concrete slab that extends beyond unit cabinet at least 6 inches. Make a slab 8 in. thick with 4 in. above grade. Use gravel apron in front of condenser coil air inlet to prevent grass and foliage from obstructing airflow. Ensure that slab is of sufficient height to allow for condensate trap as described in Step 8 on page 21.

Step 5 — Install Curb Gasketing

SIZE 030-060 UNITS

After ductwork has been connected to the roof curb, attach adhesive-backed gasketing on all end rails, cross rails, and duct rails. Be sure all joints and corners of gasket are square and flush to prevent possible water leaks. Follow all applicable building codes.

SIZE 070-100 UNITS

After ductwork has been connected to the roof curb, apply gasket material ($^1/_2$-in. thick x $1^1/_2$ in. wide neoprene) where indicated.

Single-Thickness Gasketing (See Fig. 6 and 7 for Item Numbers)

Apply gasketing in the following places:

1. Along both side rails (1) — 2 places, full length
2. Along return air end rail (2) — 1 place
3. Around return-air internal duct flange (3) — 1 or 2 places
4. Around supply-air internal duct flanges (4) — 3 places

Double-Thickness Gasketing (See Fig. 6 and 7 and Detail A-A)

Locate a line $9^3/_4$-in. from the supply air end of the accessory curb. Apply a double-thickness of gasket material along line per detail A-A.

NOTE: Do not apply gasket material along the outside edge of the curb (area "X"). This pan area of the curb extends out beneath the end of the unit's air handler section; applying gasket here develops a potential water trap area on top of the curb.

Condenser Section Roof Curb (See Fig. 8)

Apply single-thickness gasket along both side rails (5).

Table 1 — Physical Data (Sizes 030-050)

BASE UNIT	50P030		50P035	
NOMINAL CAPACITY (tons)	30		35	
OPERATING WEIGHT (lb)	Standard Chassis	Extended Chassis	Standard Chassis	Extended Chassis
Base Unit				
Vertical Discharge	4810	5310	4910	5410
Horizontal Discharge and Vertical Discharge with Discharge Plenum	5110	5610	5210	5710
With Economizer				
Vertical Discharge	5110	5610	5210	5710
Horizontal Discharge and Vertical Discharge with Discharge Plenum	5410	5910	5510	6010
COMPRESSORS	Scroll			
Quantity...Type	1...ZP154/1...ZP154		1...ZP182/1...ZP182	
Oil Charge (oz) per Compressor	110		110	
Number of Refrigerant Circuits	2		2	
REFRIGERANT	R-410A			
Operating Charge (lb), Ckt 1/Ckt 2				
Standard Evaporator Coil	15.4/14.8		17.1/17.5	
Standard Evaporator with Humidi-MiZer®	15.4/24.9		17.1/27.6	
Alternate High-Capacity Evaporator Coil	17.2/16.0		N/A	
Alternate High-Capacity Evaporator with Humidi-MiZer	17.2/26.1		N/A	
CONDENSER COILS	Aluminum Novation® Heat Exchanger with Microchannel Coils			
Quantity	1		1	
Total Face Area (sq ft)	33.3		33.3	
EVAPORATOR COILS				
Quantity	1			
Total Face Area (sq ft)	32.1			
Refrigerant Feed Device...No. per Circuit	TXV...1			
Standard Evaporator Coils				
Rows...Fins/in.	3...15.0		4...15.0	
Fin Type	Double Wavy		Double Wavy	
Tube Type	Cross Hatched		Cross Hatched	
Alternate, High-Capacity Evaporator Coils				
Rows...Fins/in.	4...15.0		N/A	
Fin Type	Double Wavy		N/A	
Tube Type	Cross Hatched		N/A	
CONDENSER FANS	Propeller Type			
Quantity...Diameter (in.)	2...30		2...30	
Nominal Cfm	18,000		19,500	
Motor Hp...Rpm	1.0...1140		1.0...1140	
SUPPLY FAN	Centrifugal 25 x 25 in.			
Nominal Cfm	12,000		14,000	
AHRI/DOE Rated Cfm	9,000		8,750	
Maximum Allowable Cfm	15,000		15,000	
Maximum Allowable Rpm	900		900	
Shaft Diameter at Pulley (in.)	$1^{11}/_{16}$		$1^{11}/_{16}$	

SUPPLY-FAN MOTOR AND DRIVE	(Any motor available on any unit)				
Motor Hp	7.5	10	15	20	25
Motor Frame Size	213T	215T	254T	256T	284T
Efficiency at Full Load (%)					
High Efficiency	88.5	89.5	91.0	91.0	91.7
Premium Efficiency	91.7	91.7	93.0	93.6	93.6
Fan Pulley Pitch Diameter (in.)	13.7	13.7	13.7	13.7	13.7
Motor Pulley Pitch Diameter (in.)	3.4	4.3	4.9	5.5	6.5
Resulting Fan Speed (rpm)	438	549	626	703	830
Belts Quantity...Type	2...BX60	2...5VX630	2...5VX630	2...5VX630	2...5VX650
Center Distance Range (in.)	17.74-14.30	17.74-14.30	17.63...14.01	17.63...14.01	16.63...12.87

OPTIONAL POWER EXHAUST†		Centrifugal, 18 x 15 in. (Any motor available on any unit)			
Quantity...Motor Hp		2...3.0	2...5.0	2...7.5	2...10
Motor Frame Size	High Eff	56HZ	184T	213T	215T
	Prem Eff	182T	184T	213T	215T
Efficiency at Full Load (%) High/Premium		81.0/88.5	87.5/89.5	88.5/91.7	89.5/91.7
Fan Pulley Pitch Diameter (in.)	High Eff	11	10.4	12	12
	Prem Eff	11.0	10.4	12	12
Motor Pulley Pitch Diameter Range (in.)	High Eff	4.1-3.1	4.7-3.7	6.0-4.8	7.0-5.8
	Prem Eff	4.1-3.1	4.7-3.7	6.0-4.8	7.0-5.8
Motor Pulley Pitch Diameter Factory Setup (in.)		4.1	4.2	5.4	6.4
Blower Shaft Diameter at Pulley (in.)		$1^{7}/_{16}$	$1^{7}/_{16}$	$1^{7}/_{16}$	$1^{7}/_{16}$
Fan Rpm Range		500-656	621-785	717-882	854-1000
Factory Setup Fan Rpm		656	703	800	927
Maximum Allowable Rpm		1000	1000	1000	1000

FILTERS		
Standard Efficiency Throwaway (Standard)		
Quantity...Size (in.)	8...20 x 25 x 2, 8...20 x 20 x 2	8...20 x 25 x 2, 8...20 x 20 x 2
Medium Efficiency (30%) Pleated (Optional)		
Quantity...Size (in.)	8...20 x 25 x 2, 8...20 x 20 x 2	8...20 x 25 x 2, 8...20 x 20 x 2
High Efficiency (90%) Bag Filters with High Velocity Prefilters (Opt)		
Quantity...Size (in.)		
Bag Filter	6...20 x 24 x 22, 6...20 x 20 x 22	6...20 x 24 x 22, 6...20 x 20 x 22
Prefilter	12...16 x 20 x 2, 3...20 x 24 x 2	12...16 x 20 x 2, 3...20 x 24 x 2
MERV 15 Cartridge Filters with High Velocity Prefilters (Opt)		
Quantity...Size (in.)		
Cartridge Filter	6...20 x 24 x 12, 6...20 x 20 x 12	6...20 x 24 x 12, 6...20 x 20 x 12
Prefilter	12...16 x 20 x 2, 3...20 x 24 x 2	12...16 x 20 x 2, 3...20 x 24 x 2
OUTSIDE AIR SCREENS		
Standard Hood (25%) Quantity...Size (in.)	None	None
OPTIONAL ECONOMIZER FILTER	Aluminum Frame, Permanent	
Quantity...Size (in.)	5...20 x 20 x 2, 2...20 x 25 x 1	5...20 x 20 x 1, 2...20 x 25 x 1

LEGEND

AHRI — Air Conditioning, Heating and Refrigeration Institute
DOE — Department of Energy
TXV — Thermostatic Expansion Valve

* 460-3-60 only.
†See Table 10 — Optional Power Exhaust Fan Drive Data on page 8 for more information.

Table 1 — Physical Data (Sizes 030-050) (cont)

BASE UNIT	50P040		50P050	
NOMINAL CAPACITY (tons)	40		50	
OPERATING WEIGHT (lb)	Standard Chassis	Extended Chassis	Standard Chassis	Extended Chassis
Base Unit				
Vertical Discharge	5310	5810	5525	6025
Horizontal Discharge and Vertical Discharge with Discharge Plenum	5610	6110	5825	6325
With Economizer				
Vertical Discharge	5610	6110	5825	6325
Horizontal Discharge and Vertical Discharge with Discharge Plenum	5910	6410	6125	6625
COMPRESSORS	Scroll			
Quantity...Type	2...ZP103/1...ZP182		2...ZP120/2...ZP137	
Oil Charge (oz) per Compressor	110		110	
Number of Refrigerant Circuits	2		2	
REFRIGERANT	R-410A			
Operating Charge (lb), Ckt 1/Ckt 2				
Standard Evaporator Coil	22.6/27.9		29.4/29.0	
Standard Evaporator with Humidi-MiZer®	22.6/40.6		29.4/41.4	
Alternate High-Capacity Evaporator Coil	31.1/37.2		35.2/36.5	
Alternate High-Capacity Evaporator with Humidi-MiZer	31.1/49.6		35.2/48.9	
CONDENSER COILS	Aluminum Novation® Heat Exchanger with Microchannel Coils			
Quantity	2		2	
Total Face Area (sq ft)	66.7		66.7	
EVAPORATOR COILS				
Quantity	1			
Total Face Area (sq ft)	45.5			
Refrigerant Feed Device...No. per Circuit	TXV...2			
Standard Evaporator Coils				
Rows...Fins/in.	3...15.0		4...15.0	
Fin Type	Double Wavy		Double Wavy	
Tube Type	Cross Hatched		Cross Hatched	
Alternate, High-Capacity Evaporator Coils				
Rows...Fins/in.	6...16.0		6...16.0	
Fin Type	Double Wavy		Double Wavy	
Tube Type	Cross Hatched		Cross Hatched	
CONDENSER FANS	Propeller Type			
Quantity...Diameter (in.)	3...30		4...30	
Nominal Cfm	30,000		38,000	
Motor Hp...Rpm	1.0...1140		1.0...1140	
SUPPLY FAN	Centrifugal 25 x 25 in.			
Nominal Cfm	16,000		20,000	
AHRI/DOE Rated Cfm	12,000		15,000	
Maximum Allowable Cfm	20,000		20,000	
Maximum Allowable Rpm	900		900	
Shaft Diameter at Pulley (in.)	$1^{11}/_{16}$		$1^{11}/_{16}$	

SUPPLY-FAN MOTOR AND DRIVE	(Any motor available on any unit)					
Motor Hp	7.5	10	15	20	25	30*
Motor Frame Size	213T	215T	254T	256T	284T	286T
Efficiency at Full Load (%)						
High Efficiency	88.5	89.5	91.0	91.0	91.7	92.4
Premium Efficiency	91.7	91.7	93.0	93.6	93.6	93.6
Fan Pulley Pitch Diameter (in.)	13.7	13.7	13.7	13.7	13.7	12.5
Motor Pulley Pitch Diameter (in.)	3.4	4.3	4.9	5.5	6.5	6.5
Resulting Fan Speed (rpm)	438	549	626	703	830	910
Belts Quantity...Type	2...BX60	2...5VX630	2...5VX630	2...5VX630	2...5VX650	3...5VX630
Center Distance Range (in.)	17.74-14.30	17.74-14.30	17.63...14.01	17.63...14.01	16.63...12.87	16.63...12.87

OPTIONAL POWER EXHAUST†		Centrifugal, 18 x 15 in. (Any motor available on any unit)			
Quantity...Motor Hp		2...3.0	2...5.0	2...7.5	2...10
Motor Frame Size	High Eff	56HZ	184T	213T	215T
	Prem Eff	182T	184T	213T	215T
Efficiency at Full Load (%) High/Premium		81.0/88.5	87.5/89.5	88.5/91.7	89.5/91.7
Fan Pulley Pitch Diameter (in.)	High Eff	11	10.4	12	12
	Prem Eff	11.0	10.4	12	12
Motor Pulley Pitch Diameter Range (in.)	High Eff	4.1-3.1	4.7-3.7	6.0-4.8	7.0-5.8
	Prem Eff	4.1-3.1	4.7-3.7	6.0-4.8	7.0-5.8
Motor Pulley Pitch Diameter Factory Setup (in.)		4.1	4.2	5.4	6.4
Blower Shaft Diameter at Pulley (in.)		$1^{7}/_{16}$	$1^{7}/_{16}$	$1^{7}/_{16}$	$1^{7}/_{16}$
Fan Rpm Range		500-656	621-785	717-882	854-1000
Factory Setup Fan Rpm		656	703	800	927
Maximum Allowable Rpm		1000	1000	1000	1000

FILTERS		
Standard Efficiency Throwaway (Standard)		
Quantity...Size (in.)	8...20 x 25 x 2, 8...20 x 20 x 2	8...20 x 25 x 2, 8...20 x 20 x 2
Medium Efficiency (30%) Pleated (Optional)		
Quantity...Size (in.)	8...20 x 25 x 2, 8...20 x 20 x 2	8...20 x 25 x 2, 8...20 x 20 x 2
High Efficiency (90%) Bag Filters with High Velocity Prefilters (Optional)		
Quantity...Size (in.)		
Bag Filter	6...20 x 24 x 22, 6...20 x 20 x 22	6...20 x 24 x 22, 6...20 x 20 x 22
Prefilter	12...16 x 20 x 2, 3...20 x 24 x 2	12...16 x 20 x 2, 3...20 x 24 x 2
MERV 15 Cartridge Filters with High Velocity Prefilters (Opt)		
Quantity...Size (in.)		
Cartridge Filter	6...20 x 24 x 12, 6...20 x 20 x 12	6...20 x 24 x 12, 6...20 x 20 x 12
Prefilter	12...16 x 20 x 2, 3...20 x 24 x 2	12...16 x 20 x 2, 3...20 x 24 x 2
OUTSIDE AIR SCREENS		
Standard Hood (25%) Quantity...Size (in.)	None	None
OPTIONAL ECONOMIZER FILTER	Aluminum Frame, Permanent	
Quantity...Size (in.)	5...20 x 20 x 2, 2...20 x 25 x 1	5...20 x 20 x 1, 2...20 x 25 x 1

LEGEND

AHRI — Air Conditioning, Heating and Refrigeration Institute
DOE — Department of Energy
TXV — Thermostatic Expansion Valve

* 460-3-60 only.
†See Table 10 — Optional Power Exhaust Fan Drive Data on page 8 for more information.

Table 2 — Physical Data (Sizes 055-070)

BASE UNIT	50P055		50P060		50P070	
NOMINAL CAPACITY (tons)	55		60		70	
OPERATING WEIGHT (lb)	Standard Chassis	Extended Chassis	Standard Chassis	Extended Chassis	Standard Chassis	Extended Chassis
Base Unit						
Vertical Discharge	6820	7370	6875	7425	7215	7765
Horizontal Discharge and Vertical Discharge with Discharge Plenum	7370	7920	7425	7975	7765	8315
With Economizer						
Vertical Discharge	7350	7900	7405	7955	7745	8295
Horizontal Discharge and Vertical Discharge with Discharge Plenum	7900	8450	7955	8505	8295	8845
COMPRESSORS	Scroll					
Quantity...Type	2...ZP137/2...ZP137		2...ZP154/2...ZP154		1...ZP154,1...ZP182/1...ZP154,1...ZP182	
Oil Charge (oz) per Compressor	110		110		110	
Number of Refrigerant Circuits	2		2		2	
REFRIGERANT	R-410A					
Operating Charge (lb), Ckt 1/Ckt 2						
Standard Evaporator Coil	37.6/37.9		37.6/37.9		41.2/44.8	
Standard Evaporator with Humidi-MiZer®	37.6/50.3		37.6/50.3		41.2/57.2	
Alternate High-Capacity Evaporator Coil	43.5/42.8		44.6/43.5		52.5/52.0	
Alternate High-Capacity Evaporator with Humidi-MiZer	43.5/55.2		44.6/55.9		52.5/64.4	
CONDENSER COILS	Aluminum Novation® Heat Exchanger with Microchannel Coils					
Quantity	2		2		4	
Total Face Area (sq ft)	66.7		66.7		106.7	
EVAPORATOR COILS						
Quantity	2					
Total Face Area (sq ft)	61.5					
Refrigerant Feed Device...No. per Circuit	TXV...2					
Standard Evaporator Coils						
Rows...Fins/in.	4...15		4...15		4...15	
Fin Type	Double Wavy		Double Wavy		Double Wavy	
Tube Type	Cross Hatched		Cross Hatched		Cross Hatched	
Alternate, High-Capacity Evaporator Coils						
Rows...Fins/in.	6...16		6...16		6...16	
Fin Type	Double Wavy		Double Wavy		Double Wavy	
Tube Type	Cross Hatched		Cross Hatched		Cross Hatched	
CONDENSER FANS	Propeller Type					
Quantity...Diameter (in.)	4...30		4...30		4...30	
Nominal Cfm	36,000		36,600		39,000	
Motor Hp...Rpm	1.0...1140		1.0...1140		1.0...1140	
SUPPLY FAN	Centrifugal 30 x 27.5 in.					
Nominal Cfm	22,000		24,000		28,000	
AHRI/DOE Rated Cfm	16,500		18,000		21,000	
Maximum Allowable Cfm	25,000		30,000		30,000	
Maximum Allowable Rpm	800		800		800	
Shaft Diameter at Pulley (in.)	$1^{11}/_{16}$		$1^{11}/_{16}$		$1^{11}/_{16}$	
SUPPLY-FAN MOTOR AND DRIVE	(Any motor available on any unit)					
Motor Hp	15	20	25	30	40*	
Motor Frame Size	254T	256T	284T	286T	S324T	
Efficiency at Full Load (%)						
High Efficiency	91.0	91.0	91.7	92.4	93.0	
Premium Efficiency	93.0	93.6	93.6	93.6	94.5	
Fan Pulley Pitch Diameter (in.)	13.7	13.7	13.7	15.5	16.1	
Motor Pulley Pitch Diameter (in.)	4.5	5.1	5.5	5.9	6.7	
Resulting Fan Speed (rpm)	575	651	703	711	740	
Belts Quantity...Type	2...5VX1230	2...5VX1230	2...5VX1230	2...5VX1230	3...5VX1250	
Center Distance Range (in.)	48.25-44.00	48.25-44.00	48.50-44.25	48.50-44.25	48.25-44.00	
OPTIONAL POWER EXHAUST†	Centrifugal, 18 x 15 in. (Any motor available on any unit)					
Quantity...Motor Hp	2...5		2...7.5		2...10	
Motor Frame Size	184T		213T		215T	
Efficiency at Full Load (%) High/Premium	87.5/89.5		88.5/91.7		89.5/91.7	
Resulting Fan Rpm	740		820		920	
Maximum Allowable Rpm	1000		1000		1000	
FILTERS						
Standard Efficiency Throwaway (Standard)						
Quantity...Size (in.)	12...20 x 25 x 2, 12...20 x 20 x 2		12...20 x 25 x 2, 12...20 x 20 x 2		12...20 x 25 x 2, 12...20 x 20 x 2	
Medium Efficiency (30%) Pleated (Optional)						
Quantity...Size (in.)	12...20 x 25 x 2, 12...20 x 20 x 2		12...20 x 25 x 2, 12...20 x 20 x 2		12...20 x 25 x 2, 12...20 x 20 x 2	
High Efficiency (90%) Bag Filters with High Velocity Prefilters (Optional)						
Quantity...Size (in.)						
Bag Filter	6...24 x 24 x 22, 6...24 x 20 x 22		6...24 x 24 x 22, 6...24 x 20 x 22		6...24 x 24 x 22, 6...24 x 20 x 22	
Prefilter	6...24 x 24 x 2, 6...20 x 24 x 2		6...24 x 24 x 2, 6...20 x 24 x 2		6...24 x 24 x 2, 6...20 x 24 x 2	
MERV 15 Cartridge Filters with High Velocity Prefilters (optional)						
Quantity...Size (in.)						
Cartridge Filter	6...24 x 24 x 12,, 6...24 x 20 x 12		6...24 x 24 x 12, 6...24 x 20 x 12		6...24 x 24 x 12, 6...24 x 20 x 12	
Prefilter	6...24 x 24 x 2, 6...20 x 24 x 2		6...24 x 24 x 2, 6...20 x 24 x 2		6...24 x 24 x 2, 6...20 x 24 x 2	
OUTSIDE AIR SCREENS						
Standard Hood (25%) Quantity...Size (in.)	4...25 x 16 x 1 2...20 x 16 x 1		4...25 x 16 x 1 2...20 x 16 x 1		4...25 x 16 x 1 2...20 x 16 x 1	
OPTIONAL ECONOMIZER FILTER	Aluminum Frame, Permanent					
Quantity...Size (in.)	12...16 x 25 x 1 2...16 x 20 x 1		12...16 x 25 x 1 2...16 x 20 x 1		12...16 x 25 x 1 2...16 x 20 x 1	

LEGEND

AHRI — Air Conditioning, Heating and Refrigeration Institute
DOE — Department of Energy
TXV — Thermostatic Expansion Valve

* 460-3-60 and 575-3-60 only.
†See Table 10 — Optional Power Exhaust Fan Drive Data on page 8 for more information.

Table 3 — Physical Data (Sizes 075-100)

BASE UNIT	50P075		50P5090		50P100	
NOMINAL CAPACITY (tons)	75		90		100	
OPERATING WEIGHT (lb)	Standard Chassis	Extended Chassis	Standard Chassis	Extended Chassis	Standard Chassis	Extended Chassis
Base Unit						
Vertical Discharge	8665	9215	9265	9815	9285	9835
Horizontal Discharge and Vertical Discharge with Discharge Plenum	—	—	—	—	—	—
With Economizer						
Vertical Discharge	9195	9745	9795	10,345	9815	10,365
Horizontal Discharge and Vertical Discharge with Discharge Plenum	—	—	—	—	—	—
COMPRESSORS	Scroll					
Quantity...Type	2...ZP182/2...ZP182		3...ZP154,3...ZP154		3...ZP154,3...ZP182	
Oil Charge (oz) per Compressor	110		110		110	
Number of Refrigerant Circuits	2		2		2	
REFRIGERANT	R-410A					
Operating Charge (lb), Ckt 1/Ckt 2						
Standard Evaporator Coil	41.2/44.8		50.4/51.3		50.8/52.8	
Standard Evaporator with Humidi-MiZer®	41.2/57.2		50.4/69.1		50.8/70.6	
Alternate High-Capacity Evaporator Coil	52.5/52.0		61.5/62.9		59.3/62.8	
Alternate High-Capacity Evaporator with Humidi-MiZer	52.5/64.4		61.5/80.7		59.3/80.6	
CONDENSER COILS	Aluminum Novation® Heat Exchanger with Microchannel Coils					
Quantity	4		6		6	
Total Face Area (sq ft)	106.7		160.0		160.0	
EVAPORATOR COILS						
Quantity	2					
Total Face Area (sq ft)	61.5					
Refrigerant Feed Device...No. per Circuit	TXV...2					
Standard Evaporator Coils						
Rows...Fins/in.	4...15		4...15		4...15	
Fin Type	Double Wavy		Double Wavy		Double Wavy	
Tube Type	Cross Hatched		Cross Hatched		Cross Hatched	
Alternate, High-Capacity Evaporator Coils						
Rows...Fins/in.	6...16		6...16		6...16	
Fin Type	Double Wavy		Double Wavy		Double Wavy	
Tube Type	Cross Hatched		Cross Hatched		Cross Hatched	
CONDENSER FAN	Propeller Type					
Quantity...Diameter (in.)	4...30		6...30		6...30	
Nominal Cfm	39,000		58,000		58,000	
Motor Hp (ea)...rpm	1.0...1140		1.0...1140		1.0...1140	
STANDARD SUPPLY FAN	Forward Curved Centrifugal 36 x 30 in.					
Nominal Cfm	30,000		36,000		40,000	
Maximum Allowable Cfm	30,000		36,000		40,000	
Maximum Allowable Rpm	680		680		680	
Shaft Diameter at Pulley (in.)	$1^{11}/_{16}$		$1^{11}/_{16}$		$1^{11}/_{16}$	
STANDARD SUPPLY-FAN MOTOR AND DRIVE	(Any motor available on any unit)					
Motor Hp	30		40	50	60	
Motor Frame Size	S268T		S324T	S326T	S364T	
Efficiency at Full Load (%)						
High Efficiency	92.4		93.0	93.0	93.6	
Premium Efficiency	93.6		94.5	94.5	95.4	
Fan Pulley Pitch Diameter (in.)	18.5		18.5	18.5	18.5	
Motor Pulley Pitch Diameter (in.)	5.3		5.7	6.5	7.1	
Resulting Fan Rpm	501		539	615	672	
Belts Quantity...Type	3...5VX1320		4...5VX1320	4...5VX1320	4...5VX1320	
Center Distance Range (in.)	47.88-45.01		47.64-44.76	47.42-44.52	47.42-44.52	
ALTERNATE, AIRFOIL FAN	Airfoil					
Nominal Airflow (cfm)	30,000		36,000		40,000	
Maximum Allowable Airflow (cfm)	30,000		36,000		40,000	
Maximum Allowable Wheel Speed (rpm)	1846		1846		1846	
Shaft Diameter at Pulley (in.)	$2^{11}/_{16}$		$2^{11}/_{16}$		$2^{11}/_{16}$	
ALTERNATE SUPPLY-FAN MOTOR AND DRIVE	(Any motor available on any unit)					
Motor Hp	30	40	50	60	75	
Motor Frame Size	S268T	S324T	S326T	S364T	365T	
Efficiency at Full Load (%)						
High Efficiency	92.4	93.0	93.0	93.6	94.1	
Premium Efficiency	93.6	94.5	94.5	95.4	95.4	
Fan Pulley Pitch Diameter (in.)	9.7	10.2	8.9	8.9	10.8	
Motor Pulley Pitch Diameter (in.)	7.5	8.7	8.1	8.7	11.1	
Resulting Fan Rpm	1353	1493	1593	1711	1799	
Belts Quantity...Type	2...5VX1150	2...5VX1180	3...5VX1150	3...5VX1150	3...5VX1230	
Center Distance Range (in.)	42.96...45.82	42.96...45.57	42.96...45.57	42.45...45.35	42.45...45.35	
OPTIONAL POWER EXHAUST*	Centrifugal, 18 x 15 in. (Any motor available on any unit.)					
Quantity...Motor Hp	2...5		2...7.5		2...10	
Motor Frame Size	184T		213T		215T	
Efficiency at Full Load (%)						
High Efficiency	87.5		88.5		89.5	
Premium Efficiency	89.5		91.7		91.7	
Fan Pulley Pitch Diameter (in.)	10.6		10.6		10.6	
Motor Pulley Pitch Diameter (in.)	4.5		5.0		5.6	
Shaft Diameter at Pulley (in.)	$1^{7}/_{16}$		$1^{7}/_{16}$		$1^{7}/_{16}$	
Resulting Fan Rpm	740		820		920	
Maximum Allowable Rpm	1000		1000		1000	
FILTERS						
Standard Efficiency Throwaway (Standard)	12...20 x 25 x 2		12...20 x 25 x 2		12...20 x 25 x 2	
Quantity...Size (in.)	12...20 x 20 x 2		12...20 x 20 x 2		12...20 x 20 x 2	
30% and 65% Pleated (Optional)	12...20 x 25 x 2		12...20 x 25 x 2		12...20 x 25 x 2	
Quantity...Size (in.)	12...20 x 20 x 2		12...20 x 20 x 2		12...20 x 20 x 2	
OUTSIDE AIR SCREENS						
Standard Hood (25%) Quantity...Size (in.)	4...25 x 16 x 1 2...20 x 16 x 1		4...25 x 16 x 1 2...20 x 16 x 1		4...25 x 16 x 1 2...20 x 16 x 1	
OPTIONAL ECONOMIZER FILTER	Aluminum Frame, Permanent					
Quantity...Size (in.)	12...16 x 25 x 1 2...16 x 20 x 1		12...16 x 25 x 1 2...16 x 20 x 1		12...16 x 25 x 1 2...16 x 20 x 1	

LEGEND

TXV — Thermostatic Expansion Valve

* See page 7 for Table 6 — Optional High-Capacity Power Exhaust Specifications. See Table 10 — Optional Power Exhaust Fan Drive Data on page 8 for more information.

Table 4 — Hydronic Heat Coil Specifications

UNIT SIZE 50P	030-050	055-100
COIL CONSTRUCTION	½-in. OD copper tubes, aluminum plate fins, galvanized steel frame	
FACE AREA (sq ft)	22.6	(2) sections: total 27.1
ROWS...FINS PER INCH	2…8	2…11
CIRCUIT ARRANGEMENT	Half	Half
CONNECTIONS — (Qty) Dim Supply (in.) Return (in.)	 (1) $2^1/_2$ NPT (1) $2^1/_2$ NPT	 (2) $1^1/_2$ NPT (2) $1^1/_2$ NPT
HEADER MATERIAL	Steel	Steel
INTERNAL VOLUME (cu ft)	0.5272	0.6327

Table 5 — Optional Return/Exhaust Fan Specifications

UNIT SIZE 50P	P030-050				P055-070				P075-100			
RETURN/EXHAUST FAN	Plenum Fan, 47.13 in. (Any motor available on any unit.)											
Quantity...Motor Hp	1...10	1...15	1...20	1...25	1...15	1...20	1...25	1...30	1...20	1...25	1...30	1...40
Motor Frame Size	215T	254T	256T	284T	254T	256T	284T	286T	256T	284T	286T	324T
Efficiency at Full Load (%) High/ Premium	91.7	93	93.6	93.6	93	93.6	93.6	93.6	91.0/ 93.6	91.7/ 93.6	92.4/ 93.6	93.0/ 93.8
Fan Pulley Pitch Diameter (in.)	6.6	7.4	6.8	8.0	9.1	9.1	9.1	9.1	8.5	9.8	8.5	8.5
Motor Pulley Pitch Diameter (in.)	4.9	6.6	6.6	8.0	5.9	6.1	6.7	6.9	5.3	6.7	6.1	6.7
Shaft Diameter at Pulley (in.)	$1^7/_{16}$	$1^7/_{16}$	$1^7/_{16}$	$1^7/_{16}$	$1^{11}/_{16}$	$1^{11}/_{16}$	$1^{11}/_{16}$	$1^{11}/_{16}$	$2^{15}/_{16}$	$2^{15}/_{16}$	$2^{15}/_{16}$	$2^{15}/_{16}$
Resulting Fan Rpm	1300	1540	1700	1730	1150	1200	1300	1327	1104	1209	1271	1396
Maximum Allowable Rpm	1750	1750	1750	1750	1750	1750	1750	1750	1447	1447	1447	1447

Table 6 — Optional High-Capacity Power Exhaust Specifications (50P075-100 Only)

UNIT SIZE 50P	075-100				
POWER EXHAUST	Centrifugal, 22 x 20 in., $1^{11}/_{16}$ in. shaft diameter (Any motor available on any unit)				
Total Hp	20	30	40	50	60
Quantity...Motor Hp	2...10	2...15	2...20	2...25	2...30
Motor Frame Size	S215T	D254T	S256T	S284T	S286T
Efficiency at Full Load (%)					
High Efficiency	89.5	91	91	91.7	92.4
Premium Efficiency	91.7	93	93.6	93.6	93.6
Fan Sheave Pitch Diameter (in.)	12.4	12.4	11.1	11.1	11.1
Motor Sheave Pitch Diameter (in.)	4.8	5.8	5.9	6.5	6.9
Resulting Fan Rpm	714	841	928	1020	1094
Maximum Allowable Rpm	1175	1175	1175	1175	1175
Belts — Quantity...Type	2...BX93	2...BX93	2...5VX950	2...5VX950	2...5VX950

Table 7 — Optional Humidi-MiZer® Coil Data

UNIT SIZE 50P	030-075	090,100
Humidi-MiZer Coil Construction	Aluminum Novation® Coil	
Quantity	1	1
Face Area (sq ft)	26.7	33.3

Table 8 — Operating Weights of Options and Accessories

OPTION OR ACCESSORY	50P UNIT SIZE							
	030,035	040,050	055	060	070	075	090	100
Electric Heat*	140	140	140	140	140	250	250	250
Condenser Section Roof Curb	—	—	540	540	625	625	625	625
Economizer	300†	300†	530†	530†	530†	530†	530†	530†
Power Exhaust (PE)	710†	710†	710†	710†	710†	710†	710†	710†
Barometric Relief	200	200	200	200	200	200	200	200
Double Wall Construction	700	800	900	900	900	900	900	900
Roof Curb								
50P Standard Length	390	480	560	560	560	605	605	605
50P with Discharge Plenum	455	495	605	605	605	605	605	605
50P Extended Length	545	545	545	545	545	—	—	—
50P Extended Length with Discharge Plenum	545	545	1200	1200	—	—	—	—
50P with High-Capacity Power Exhaust	—	—	—	—	—	700	700	700
High-Efficiency Filters	20	20	20	20	20	20	20	20
Bag Filters	35	35	40	40	40	—	—	—
Hail Guard	120	150	145	145	210	210	210	210
Inlet Guide Vanes	95	95	115	115	115	115	115	115
Variable Frequency Drive								
7.5 hp	20	20	—	—	—	—	—	—
10 hp	20	20	—	—	—	—	—	—
15 hp	35	35	35	35	35	—	—	—
20 hp	35	35	35	35	35	—	—	—
25 hp	53	53	53	53	53	—	—	—
30 hp	—	—	53	53	53	53	53	53
40 hp	—	—	53	53	53	53	53	53
50 hp	—	—	—	—	—	53	53	53
60 hp	—	—	—	—	—	53	53	53
75 hp	—	—	—	—	—	152	152	152
High-Capacity Evaporator Coil	150	300	300	300	300	300	300	300
Airfoil Fan	—	—	—	—	—	350	350	350
Hot Water Coil*	150	150	180	180	180	180	180	180
Humidi-MiZer Adaptive Dehumidification System	72	72	72	72	72	72	92	92

*Vertical discharge units only.
†Includes hood.

Table 9 — Supply Fan Drive Data

HP	SHAFT DIA (in.)	SPEED (rpm)	MOTOR SHEAVE	MOTOR PITCH DIA. (in.)	WHEEL SHEAVE	WHEEL PITCH DIA. (in.)	QUANTITY ...BELT
Sizes 030-050							
7.5	1 3/8	438	2BK36	3.4	2B5V136	13.6	2...BX60
10	1 3/8	549	2B5V42	4.3	2B5V136	13.7	2...5VX630
15	1 5/8	626	2B5V48	4.9	2B5V136	13.7	2...5VX630
20	1 5/8	703	2B5V54	5.5	2B5V136	13.7	2...5VX630
25	1 7/8	830	2B5V64	6.5	2B5V136	13.7	2...5VX650
30*	1 7/8	910	3B5V64	6.5	3B5V124	12.5	3...5VX630
Sizes 055-070							
15	1 5/8	575	2B5V44	4.5	2B5V136	13.7	2...5VX1230† 2...5VX1120**
20	1 5/8	651	2B5V50	5.1	2B5V136	13.7	2...5VX1230† 2...5XV1150**
25	1 7/8	703	2B5V54	5.5	2B5V136	13.7	2...5VX1230† 2...5VX1150**
30	1 7/8	711	2B5V62	5.9	2B5V154	15.5	2...5VX1230† 2...5VX1180**
40	2 1/8	740	3B5V66	6.7	3B5V160	16.1	3...5VX1250† 3...5VX1180**
Sizes 075-100 (Forward Curved Fan)							
30	1 7/8	501	3B5V52	5.33	B5V184	18.5	3...5VX1320
40	2 1/8	539	4B5V56	5.74	B5V184	18.5	4...5VX1320
50	2 1/8	615	4B5V64	6.54	B5V184	18.5	4...5VX1320
60	2 3/8	672	4B5V70	7.14	B5V184	18.5	4...5VX1320
Sizes 075-100 (Airfoil Fan)							
30	1 7/8	1353	2B5V74	7.5	2Q5V97	9.7	2...5VX1150
40	2 1/8	1493	2B5V86	8.7	2Q5V103	10.2	2...5VX1180
50	2 1/8	1593	3B5V80	8.1	3R5V90	8.9	3...5VX1150
60	2 3/8	1711	3B5V86	8.7	3R5V90	8.9	3...5VX1150
75	2 3/8	1799	3B5V110	11.1	3R5V109	10.8	3...5VX1230

*Sizes 040,050 only.
†Horizontal discharge units.
**Vertical discharge and extended plenum units.

NOTE: Part numbers are Browning Manufacturing Corp. reference.

Table 10 — Optional Power Exhaust Fan Drive Data

TOTAL HP	MOTOR QTY...HP	MOTOR SHAFT DIAMETER (in.)	FAN SPEED RPM	MOTOR SHEAVE		BLOWER SHEAVE		50P2,P3 UNITS		50P4,P5 UNITS	
				Part Number	Pitch Diameter (in.)	Part Number	Pitch Diameter (in.)	BELTS QTY...P/N	CENTER DISTANCE RANGE (in.)	BELTS QTY...P/N	CENTER DISTANCE RANGE (in.)
Sizes 030-050											
6*	2...3	7/8	656/500	1VL44	4.1-3.1	BK115	11.0	1...BX71	23.62-26.50	1...BX46	11.40-13.26
6†	2...3	1 1/8	656/500	1VP44L	4.1-3.1	BK115	11.0	1...BX71	23.62-26.50	1...BX46	11.40-13.26
10**	2...5	1 1/8	785/621	1VP50L	4.7-3.7	BK110	10.4	1...BX71	23.62-26.50	1...BX46	11.16-13.05
15**	2...7.5	1 3/8	882/717	1VP65	6.0-4.8	BK130	12.0	1...BX77	23.62-26.50	1...BX53	11.40-13.26
20**	2...10	1 3/8	1000/854	1VP75	7.0-5.8	BK130	12.0	1...BX79	23.62-26.50	1...BX53	11.04-12.95
Sizes 055-100											
10	2...5	1 1/8	740	2P3V45	4.5	2Q3V106	10.6	2...3VX71	22.71-26.38	2...3VX50	10.91-13.30
15	2...7.5	1 3/8	820	2P3V50	5.0	2Q3V106	10.6	2...3VX71	22.71-26.38	2...3VX50	10.78-13.20
20	2...10	1 3/8	920	2P3V56	5.6	2Q3V106	10.6	2...3VX75	22.71-26.38	2...3VX50	10.78-13.20

*High Efficiency Motor Option.
†Premium Efficiency Motor Option.
**Applies to both motor options.

NOTE: Part numbers are Browning Manufacturing Corp. reference.

Table 11 — Optional High-Capacity Power Exhaust Fan Drive Data

TOTAL HP	MOTOR QTY...HP	MOTOR SHAFT DIA. (in.)	SPEED RPM	MOTOR SHEAVE		BLOWER SHEAVE		QTY...BELT	CENTER DISTANCE RANGE (in.)
				Part Number	Pitch Diameter (in.)	Part Number	Pitch Diameter (in.)		
20	2...10	1.375	714	2B5V48	4.8	2B5V124	12.4	2...BX93	32.8 to 36.7
30	2...15	1.625	841	2B5V58	5.8	2B5V124	12.4	2...BX93	32.6 to 36.5
40	2...20	1.625	928	2B5V58	5.9	2B5V110	11.1	2...5VX950	32.6 to 36.5
50	2...25	1.875	1020	2B5V64	6.5	2B5V110	11.1	2...5VX950	32.5 to 36.3
60	2...30	1.875	1094	2B5V68	6.9	2B5V110	11.1	2...5VX950	32.5 to 36.3

Table 12 — Optional Return/Exhaust Fan Drive Data

TOTAL HP	MOTOR QTY...HP	MOTOR SHAFT DIA. (in.)	SPEED RPM	MOTOR SHEAVE		BLOWER SHEAVE		QTY...BELT	CENTER DISTANCE RANGE (in.)
				Part Number	Pitch Diameter (in.)	Part Number	Pitch Diameter (in.)		
P030-050									
10	1...10	1.375	1300	2B5V48	4.9	D4700	6.6	2...BX80	31.3 to 34.20
15	1...15	1.625	1540	2B5V66	6.6	2BK80	7.4	2...BX86	38.2 to 35.7
20	1...20	1.625	1700	2B5V66	6.6	D4720	6.8	2...BX85	38.2 to 35.7
25	1...25	1.875	1730	2B5V80	8.0	2B5V808	8.0	2...BX90	33.0 to 35.9
P055-070									
15	1...15	1.625	1150	2B5V58	5.9	2B5V90	9.1	2...5VX950	34.8 to 37.7
20	1...20	1.625	1200	2B5V60	6.1	2B5V90	9.1	2...5VX950	34.8 to 37.7
25	1...25	1.875	1300	2B5V66	6.7	2B5V90	9.1	2...5VX1000	35.6 to 38.5
30	1...30	1.875	1327	2B5V68	6.9	2B5V90	9.1	2...5VX1000	35.6 to 38.5
P075-100									
20	1...20	1.625	1104	3B5V52	5.3	3R5V85	8.5	3...5VX1000	38.1 to 41.0
25	1...25	1.875	1209	3B5V66	6.7	3R5V97	9.8	3...5VX1060	38.9 to 41.8
30	1...30	1.875	1271	3B5V60	6.1	3R5V85	8.5	3...5VX1030	38.9 to 41.8
40	1...40	2.125	1396	3B5V66	6.7	3R5V85	8.5	3...5VX1060	39.9 to 42.8

NOTES:

1. ROOF CURB IS SHIPPED DISASSEMBLED.
2. ROOFCURB: 14 GA.[VA03-56] STL.
3. DIMENSIONS IN [ ] ARE MILLIMETERS.

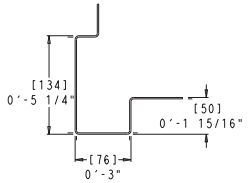

BASE RAIL CROSS SECTION
TYP ALL BASE RAILS

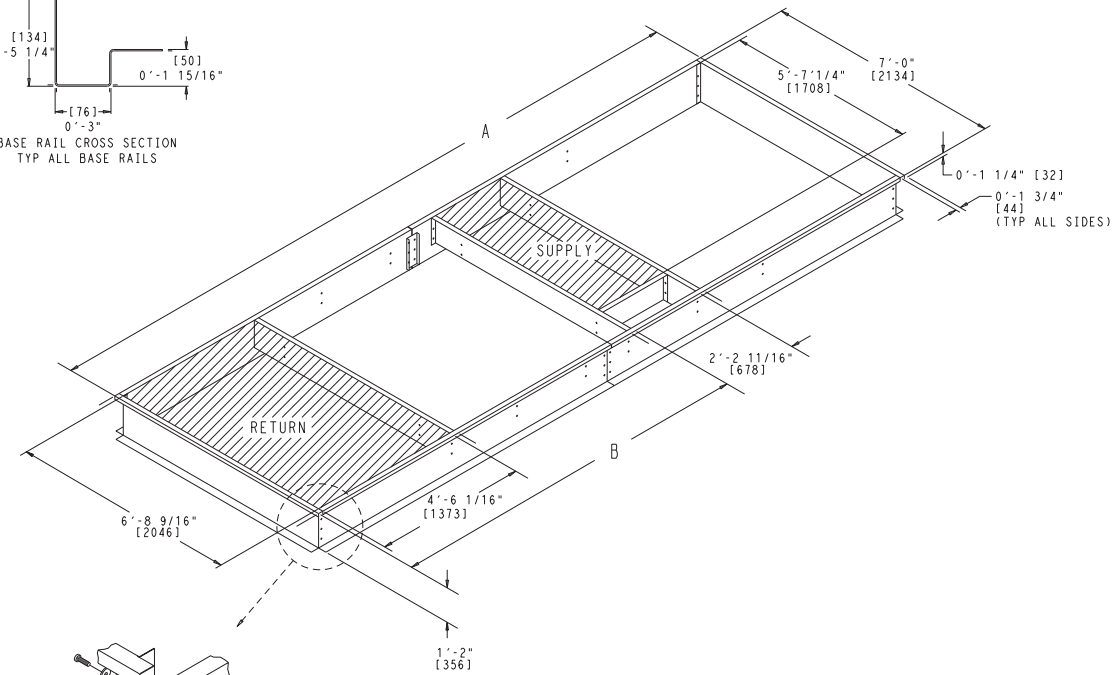

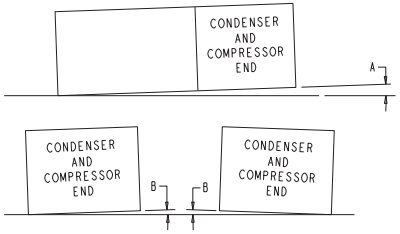

DIMENSIONS
(degrees and inches)

A		B	
DEG.	IN.	DEG.	IN.
1.0	2.0	.50	.75

UNIT LEVELING TOLERANCES
*From edge of unit to horizontal.

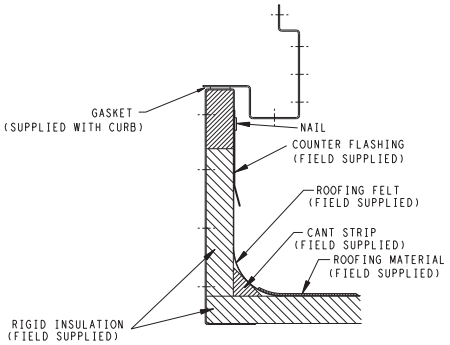

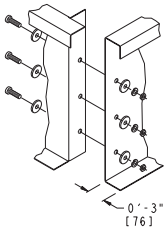

(CORNER CONNECTIONS AND
SPLICE PLATE CONNECTIONS)

UNIT TYPE	DIMENSION	UNIT SIZE 030,035	UNIT SIZE 040,050
50P VERTICAL SUPPLY & RETURN	A B	19′-2 3/8″ 10′-10 3/8″	25′-9 5/8″ 13′-7 1/16″
50P VERTICAL SUPPLY & RETURN W/EXTENDED CHASSIS	A B	21′-3 9/16″ 12′-11 9/16″	27′-10 13/16″ 15′-8 7/32″
48/50P VERTICAL & HORIZONTAL SUPPLY & RETURN W/EXTENDED PLENUM	A B	20′-9 1/16″ 13′-3 11/16″	27′-4 9/16″ 16′-0 5/8″
48/50P VERTICAL & HORIZONTAL SUPPLY & RETURN W/EXTENDED CHASSIS & PLENUM	A B	22′-10 1/4″ 15′-4 7/8″	29′-5 13/16″ 18′-1 7/8″

Fig. 1 — Roof Curb — Sizes 030-050

NOTES:
1. ROOF CURB IS SHIPPED DISASSEMBLED.
2. ROOF CURB: 14 GA.[VA03-56] STL.
3. DIMENSIONS IN [ ] ARE MILLIMETERS.

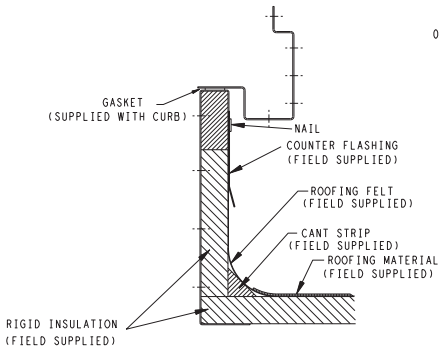

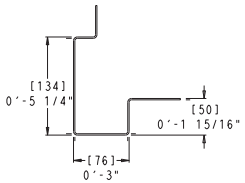

BASE RAIL CROSS SECTION
TYP ALL BASE RAILS

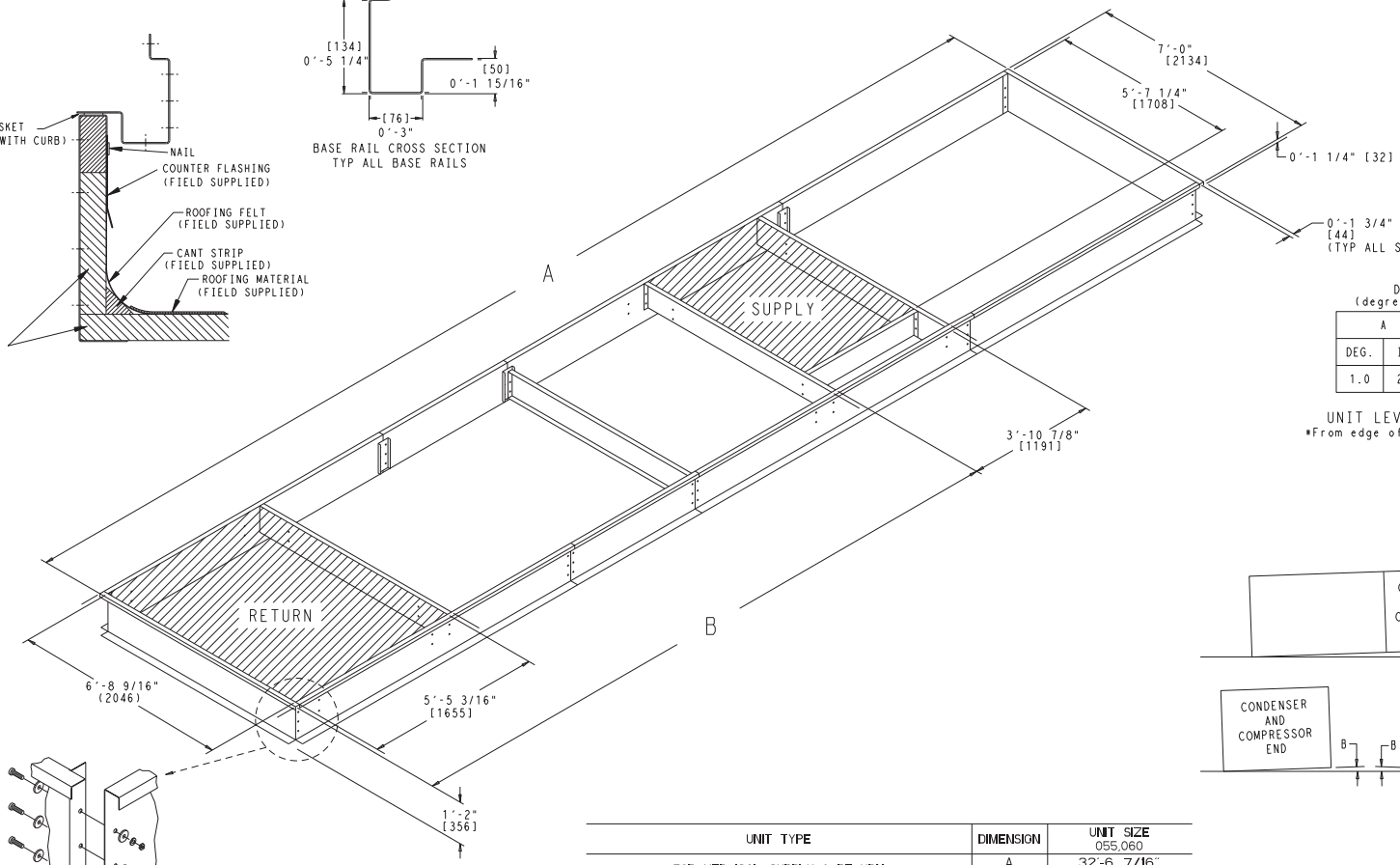

DIMENSIONS
(degrees and inches)

A		B	
DEG.	IN.	DEG.	IN.
1.0	2.0	.50	.75

UNIT LEVELING TOLERANCES
*From edge of unit to horizontal.

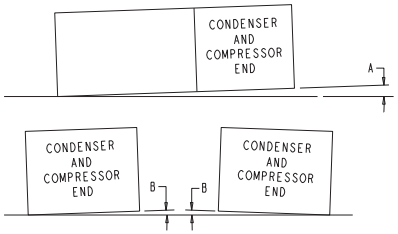

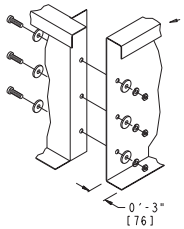

(CORNER CONNECTIONS AND
SPLICE PLATE CONNECTIONS)

UNIT TYPE	DIMENSION	UNIT SIZE 055,060
50P VERTICAL SUPPLY & RETURN	A B	32'-6 7/16" 19'-5 9/16"
50P VERTICAL SUPPLY & RETURN W/EXTENDED CHASSIS	A B	34'-7 5/8" 21-6 3/4"
48/50P VERTICAL & HORIZONTAL SUPPLY & RETURN W/EXTENDED PLENUM	A B	35'-11 1/16" 22'-10 3/16"
48/50P VERTICAL & HORIZONTAL SUPPLY & RETURN W/EXTENDED CHASSIS & PLENUM	A B	38'-0 1/4" 24'-11 3/8"

Fig. 2 — Roof Curb — Sizes 055, 060

NOTES:
1. ROOF CURB ACCESSORY IS SHIPPED DISASSEMBLED.
2. ROOF CURB: 14 GA.[VA03-56] STL.
3. DIMENSIONS IN [ ] ARE MILLIMETERS.
4. SUGGESTED HOLE LOCATION FOR FIELD WIRING THROUGH ROOF CURB(HOLES TO BE SUPPLIED BY FIELD).
5. COVER TO BE INSTALLED AFTER SUPPLY DISCHARGE.

BASE RAIL CROSS SECTION
TYP ALL BASE RAILS

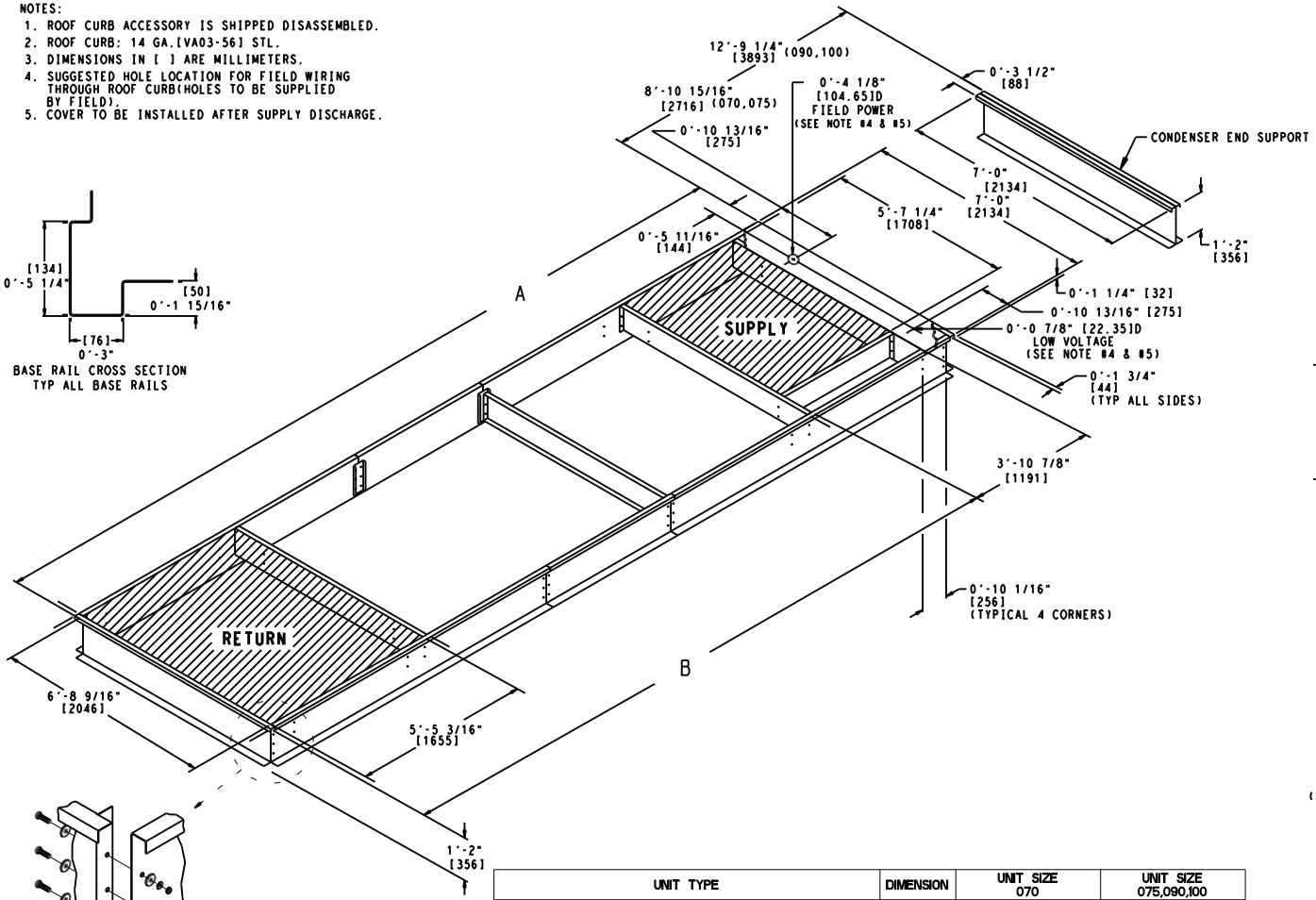

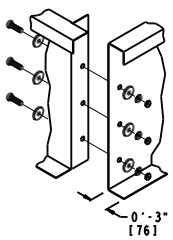

(CORNER CONNECTIONS AND SPLICE PLATE CONNECTIONS)

DIMENSIONS
(degrees and inches)

A		B	
DEG.	IN.	DEG.	IN.
1.0	2.0	.50	.75

UNIT LEVELING TOLERANCES
•From edge of unit to horizontal.

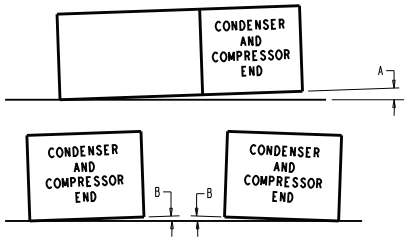

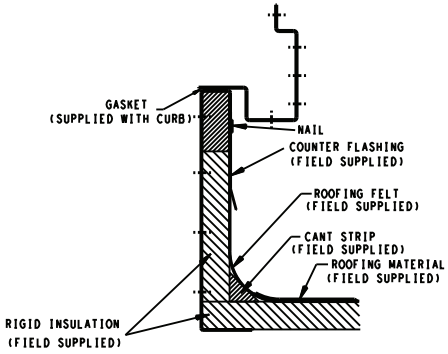

UNIT TYPE	DIMENSION	UNIT SIZE 070	UNIT SIZE 075,090,100
50P VERTICAL SUPPLY & RETURN	A B	24'-5 1/16" 19'-5 9/16"	27'-9 11/16" 22'-10 3/16"
50P VERTICAL SUPPLY & RETURN W/EXTENDED CHASSIS	A B	26'-6 1/4" 21'-6 3/4"	29'-10 7/8" 24'-11 3/8"
48/50P VERTICAL & HORIZONTAL SUPPLY & RETURN W/EXTENDED PLENUM	A B	27'-9 11/16" 22'-10 3/16"	27'-9 11/16" 22'-10 3/16"
48/50P VERTICAL & HORIZONTAL SUPPLY & RETURN W/EXTENDED CHASSIS & PLENUM	A B	29'-10 7/8" 24'-11 3/8"	29'-10 7/8" 24'-11 3/8"

SHEET					
1 OF 1	02/19/09	50DW412157	48/50P070-100 VERTICAL & HORIZONTAL SUPPLY & RETURN W/EXTENDED CHASSIS & PLENUM	48ZZ501985	A.3

Fig. 3 — Roof Curb — Sizes 070-100

NOTES:
1. ROOF CURB ACCESSORY CRRFCURB070A00 IS SHIPPED DISASSEMBLED.
2. DIMENSIONS IN [ ] ARE MILLIMETERS.
3. ROOF CURB: 14 GA.[VA03-56] STL.
   ROOF CURB PANS: 16 GA.[VA03-56] STL.

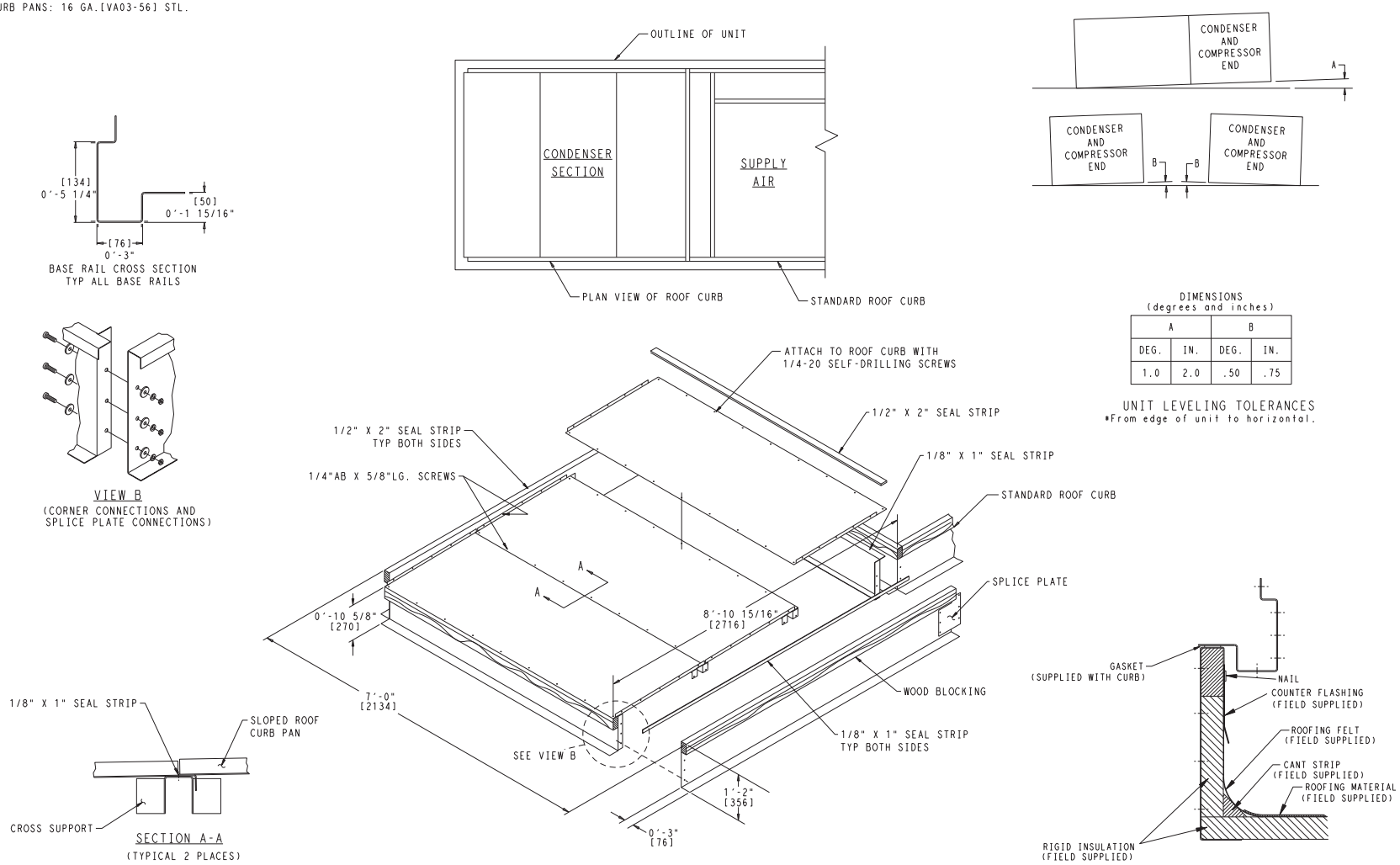

DIMENSIONS
(degrees and inches)

A		B	
DEG.	IN.	DEG.	IN.
1.0	2.0	.50	.75

UNIT LEVELING TOLERANCES
*From edge of unit to horizontal.

Fig. 4 — Condenser Section Roof Curb (Sizes 070 and 075)

NOTES:
1. ROOF CURB ACCESSORY CRRFCURB071A00 IS SHIPPED DISASSEMBLED.
2. DIMENSIONS IN [ ] ARE MILLIMETERS.
3. ROOF CURB: 14 GA.[VA03-56] STL.
   ROOF CURB PANS: 16 GA.[VA03-56] STL.

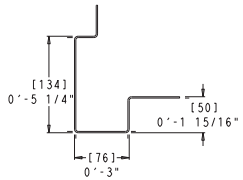

BASE RAIL CROSS SECTION
TYP ALL BASE RAILS

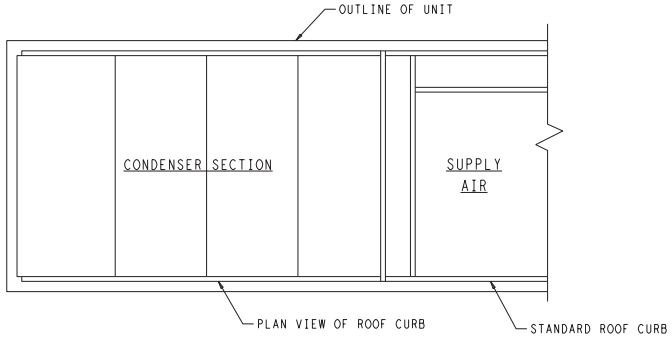

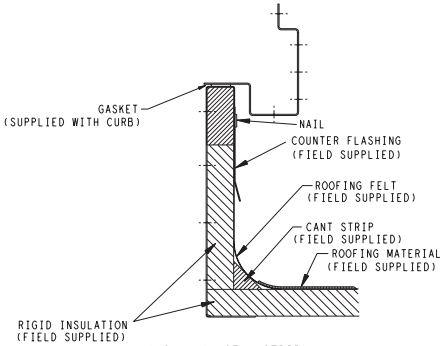

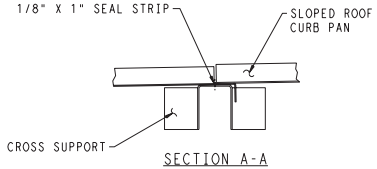

SECTION A-A
(TYPICAL 3 PLACES)
SCALE 1:3

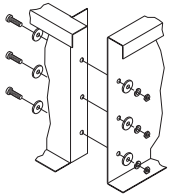
VIEW B
(CORNER CONNECTIONS AND
SPLICE PLATE CONNECTIONS)

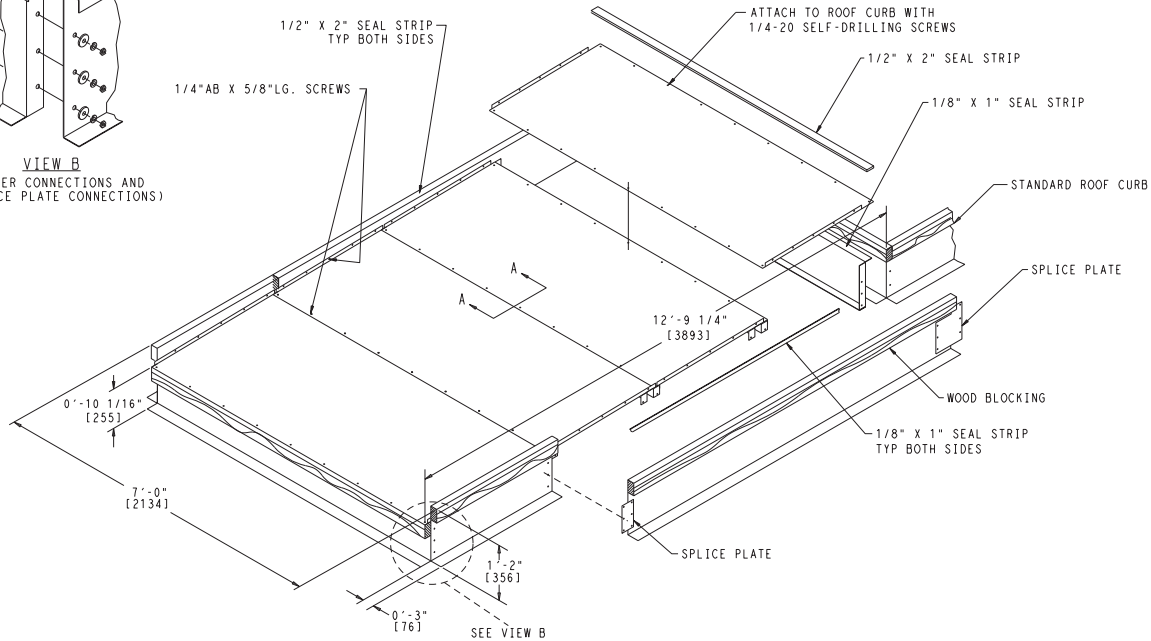

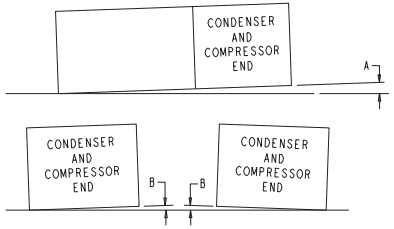

DIMENSIONS
(degrees and inches)

A		B	
DEG.	IN.	DEG.	IN.
1.0	2.0	.50	.75

UNIT LEVELING TOLERANCES
*From edge of unit to horizontal.

Fig. 5 — Condenser Section Roof Curb (Sizes 090 and 100)

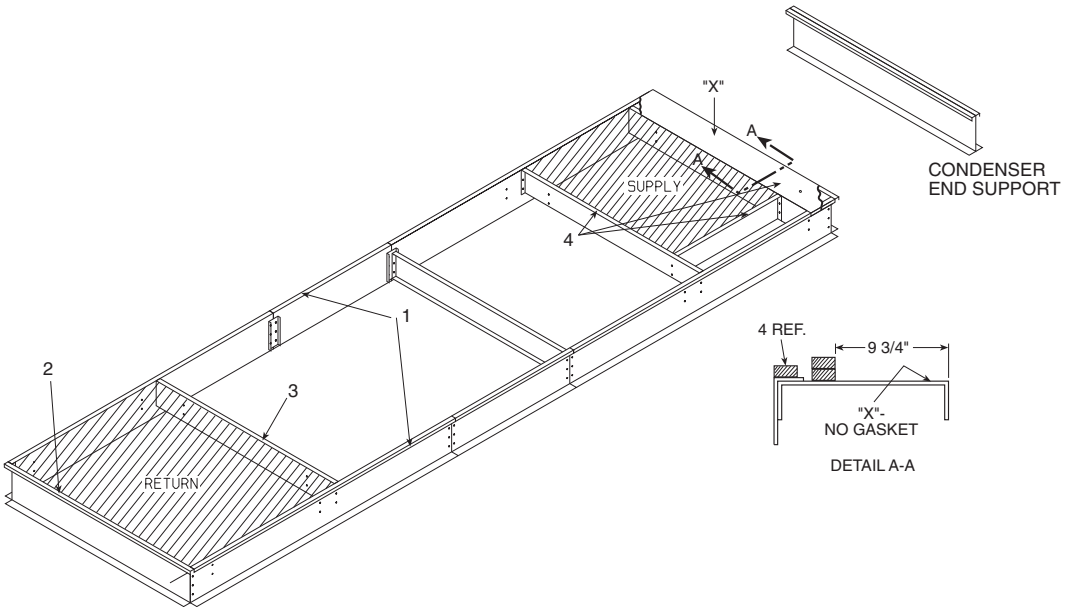

Fig. 6 — Gasket Location on Roof Curb (Size 070-100 Units)

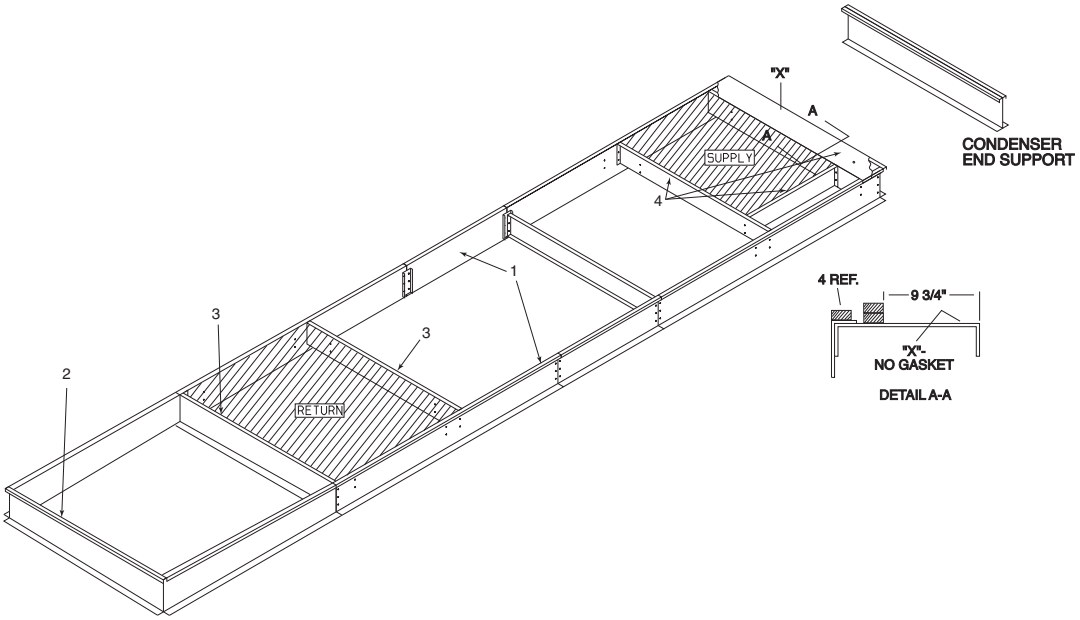

Fig. 7 — Gasket Location on Roof Curb (Size 075-100 Units with Optional High-Capacity Power Exhaust)

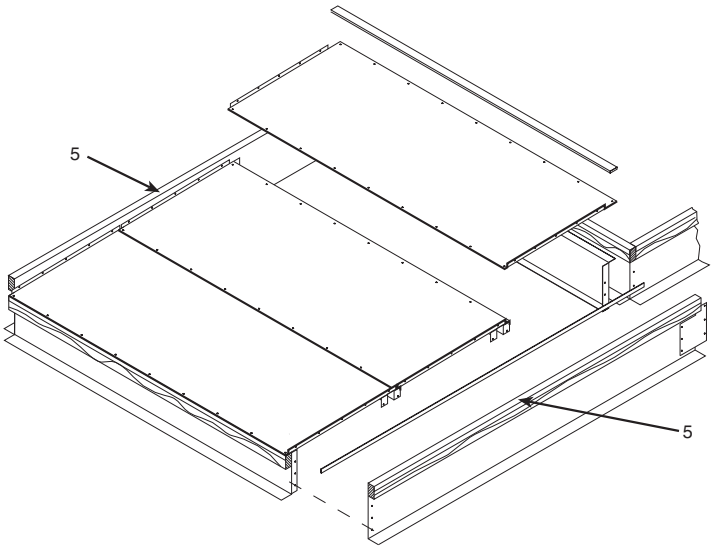

Fig. 8 — Gasket Location — Condenser Section Roof Curb (Size 070-100 Units)

Step 6 — Field-Fabricate Ductwork

⚠ WARNING

For vertical supply and return units, tools or parts could drop into ductwork and cause an injury. Install a 90-degree elbow in the return ductwork between the unit and the conditioned space. If a 90-degree elbow cannot be installed, then a grille of sufficient strength and density should be installed to prevent objects from falling into the conditioned space. Due to electric heater, supply duct will require 90-degree elbow. Failure to follow these instructions could result in personal injury or property damage due to fire or falling objects.

NOTE: A 90-degree elbow must be provided in the supply ductwork to comply with UL (Underwriters Laboratories) codes for use with electric heat.

VERTICAL SUPPLY/RETURN

The 50P2,P3,P6,P7 units are designed for vertical supply/return only. Field-fabricated ductwork must be attached to the roof curb, or to the support steel, prior to the final rigging and installation of the unit. Supply and return duct dimensions are shown in Fig. 1-3.

To attach ductwork to roof curb, insert duct approximately 10 to 11 in. up into roof curb. Connect ductwork to 14-gage roof curb material with sheet metal screws driven from inside the duct.

Secure all ducts to the building structure, using flexible duct connectors between roof curbs and ducts as required. Ducts passing through an unconditioned space must be insulated and covered with a vapor barrier. Outlet grilles must not lie directly below unit discharge.

Design supply duct strong enough to handle expected static pressures.

HORIZONTAL SUPPLY/RETURN

The 50P4,P5,P8,P9 units are designed for horizontal return (end of unit) and horizontal supply (left hand side of unit). Units are shipped with sheet metal duct opening covers. Units are provided with duct flanges on each opening. Ductwork should be connected directly to the unit duct flanges after the unit has been rigged, positioned, and installed. Remove and discard duct covers prior to connecting ductwork. Supply and return duct dimensions are shown in Base Unit Dimensional Drawings on pages 22-31.

To attach ductwork to unit flanges, insert duct approximately 3-in. over the flanges. Connect ductwork to 14-gage flanges with sheet metal screws driven from outside of the duct. Add sealant or caps to sharp points on screws where appropriate for technician safety.

Secure all ducts to the building structure, using flexible duct connectors between roof curbs and ducts as required. Ducts passing through an unconditioned space must be insulated and covered with a vapor barrier.

Design supply duct strong enough to handle expected static pressures.

HORIZONTAL SUPPLY/VERTICAL RETURN WITH OPTIONAL RETURN/EXHAUST FAN

The 50P4,P5 units with return/exhaust fan are designed for vertical return and horizontal supply (left hand side of unit). Units are shipped with sheet metal duct opening cover for the horizontal supply. Units are provided with duct flanges on the supply opening. Ductwork should be connected directly to the unit duct flanges after the unit has been rigged, positioned and installed. Remove and discard duct covers prior to connecting ductwork. Field-fabricated ductwork must be attached to the return roof curb, on to the support steel, prior to the final rigging and installation of the unit. Return duct dimensions are shown in Fig. 3.

To attach ductwork to roof curb, insert duct approximately 10 to 11-in. up into roof curb. Connect ductwork to 14-gage roof curb material with sheet metal screws driven from inside the duct. To attach ductwork to unit flanges, insert duct approximately 3-in. over the flanges. Connect ductwork to 14-gage flanges with sheet metal screws driven from outside of the duct. Add sealant or caps to sharp points on screws where appropriate for technician safety.

Secure all ducts to the building structure, using flexible duct connectors between roof curbs and ducts, as required. Ducts passing through an unconditioned space must be insulated and covered with a vapor barrier. Outlet grilles must not lie directly below unit discharge. The return duct must have a 90-degree elbow before opening into the building space if the unit is equipped with power exhaust.

Design supply duct strong enough to handle expected static pressures.

Step 7 — Rig Unit

Do not drop unit; keep upright. Use spreader bars over unit to prevent sling or cable damage. Sheets of plywood placed along the condenser coils will provide additional protection. All lifting lugs MUST be used when lifting unit. Level by using unit frame as a reference. See Fig. 9 and 10 for information. Unit and accessory weights are shown in Tables 1-3 and 8. Weight distribution and center of gravity can be found in Fig. 11.

⚠ CAUTION - NOTICE TO RIGGERS:

ALL PANELS MUST BE IN PLACE WHEN RIGGING.

NOTE: Rig with four cables and spread with two 95 inch (2413 MM) spreader bars.

Position			Units	Size	Weight		Center of Gravity Dimensions				Lifting Lugs	
							A		B		C	
1,2,3	4	5			Lbs	Kgs	Inches	Millimeters	Inches	Millimeters	Inches	Millimeters
48P	2,3,4,5	B,D,H	48 P2, P3, P4, P5, P6,P7,P8,P9	30	6019	2733	170.6	4334	45.8	1164	166.4	4227
	6,7,8,9		Vertical Supply/ Return	35	6169	2801	170.9	4342	45.8	1164	166.4	4227
			Horizontal Supply/ Return	40	6710	3046	198.2	5035	45.8	1164	185.3	4707
			Low Gas Heat	50	6925	3144	198.0	5029	45.8	1164	185.3	4707
				55	9220	4186	228.9	5814	45.8	1164	257.5	6541
				60	9275	4211	228.5	5803	45.8	1164	257.5	6541
				70	9615	4365	244.7	6215	40.2	1021	219.0	5563
48P	2,3,4,5	C,E,J	48 P2, P3, P4, P5, P6,P7,P8,P9	30	6149	2792	169.7	4310	45.8	1164	166.4	4227
	6,7,8,9		Vertical Supply/ Return	35	6299	2860	170.0	4319	45.8	1164	166.4	4227
			Horizontal Supply/ Return	40	6840	3105	197.3	5012	45.8	1164	185.3	4707
			High Gas Heat	50	7055	3203	200.4	5090	45.8	1164	185.3	4707
				55	9350	4245	229.0	5816	45.8	1164	257.5	6541
				60	9405	4270	228.5	5805	45.8	1164	257.5	6541
				70	9745	4424	244.8	6218	40.2	1021	219.0	5563
48P	2,3,4,5	P,R,W	48 P2, P3, P4, P5, P6,P7,P8,P9	30	6519	2960	187.1	4753	45.8	1164	191.6	4867
	6,7,8,9		Vertical Supply/ Return	35	6669	3028	187.7	4768	45.8	1164	191.6	4867
			Horizontal Supply/ Return	40	7210	3273	214.8	5456	45.8	1164	208.2	5288
			Low Gas Heat	50	7425	3371	217.8	5532	45.8	1164	208.2	5288
			Extended Chassis	55	9770	4436	242.7	6164	45.8	1164	273.2	6939
				60	9825	4461	242.2	6151	45.8	1164	273.2	6939
				70	10165	4615	258.3	6562	40.2	1021	250.2	6355
48P	2,3,4,5	Q,S,X	48 P2, P3, P4, P5, P6,P7,P8,P9	30	6649	3019	186.1	4726	45.8	1164	191.6	4867
	6,7,8,9		Vertical Supply/ Return	35	6799	3087	186.7	4742	45.8	1164	191.6	4867
			Horizontal Supply/ Return	40	7340	3332	213.8	5431	45.8	1164	208.2	5288
			High Gas Heat	50	7555	3430	216.8	5507	45.8	1164	208.2	5288
			Extended Chassis	55	9900	4495	242.7	6166	45.8	1164	273.2	6939
				60	9955	4520	242.3	6153	45.8	1164	273.2	6939
				70	10295	4674	258.4	6564	40.2	1021	250.2	6355
50P	2,3,6,7	-,A,B,C	50 P2, P3, P6, P7	30	5519	2506	159.2	4043	45.8	1164	148.1	3762
			Vertical Supply/ Return	35	5669	2574	159.4	4049	45.8	1164	148.1	3762
				40	6210	2819	186.1	4727	45.8	1164	169.5	4305
				50	6425	2917	189.3	4807	45.8	1164	169.5	4305
				55	8230	3736	212.6	5401	45.8	1164	210.5	5347
				60	8285	3761	212.3	5392	45.8	1164	210.5	5347
				70	8625	3916	250.5	6362	40.2	1021	176.5	4483
50P	2,3,6,7	H	50 P2, P3, P6,P7	30	5819	2642	152.3	3867	45.8	1164	166.4	4227
			Vertical Supply/ Return w/ Ext Plenum	35	5969	2710	152.1	3863	45.8	1164	166.4	4227
				40	6510	2956	180.2	4576	45.8	1164	185.3	4707
	4,5,8,9	-	50 P4, P5, P8,P9	50	6725	3053	183.6	4665	45.8	1164	185.3	4707
			Horizontal Supply/ Return	55	8780	3986	231.7	5885	45.8	1164	257.5	6541
				60	8835	4011	231.3	5874	45.8	1164	257.5	6541
				70	9175	4165	247.5	6287	40.2	1021	219.0	5563
50P	2,3,6,7	R,S,T,V,W	50 P2, P3, P6, P7	30	6019	2733	175.4	4456	45.8	1164	173.3	4402
			Vertical Supply/ Return	35	6169	2801	176.2	4475	45.8	1164	173.3	4402
			w/ Extended Chassis	40	6710	3046	202.8	5151	45.8	1164	194.7	4945
				50	6925	3144	205.8	5228	45.8	1164	194.7	4945
				55	8780	3986	226.0	5741	45.8	1164	208.2	5288
				60	8835	4011	225.6	5731	45.8	1164	208.2	5288
				70	9175	4165	264.8	6725	40.2	1021	201.7	5123
50P	2,3,6,7	P,Y	50 P2, P3, P6, P7	30	6319	2869	166.8	4237	45.8	1164	191.6	4867
		R,W	Vertical Supply/ Return w/ Ext Plenum	35	6469	2937	167.1	4244	45.8	1164	191.6	4867
			w/ Extended Chassis	40	7010	3183	195.3	4961	45.8	1164	208.2	5288
	4,5,8,9		50 P4, P5, P8, P9	50	7225	3280	198.8	5050	45.8	1164	208.2	5288
			Horizontal Supply/ Return	55	9330	4236	245.1	6226	45.8	1164	273.2	6939
			w/ Extended Chassis	60	9385	4261	244.7	6214	45.8	1164	273.2	6939
				70	9725	4415	260.8	6625	45.8	1164	250.2	6355
50P	2,3,6,7	-,A,B,C	50 P2, P3, P6, P7	30	6394	2903	158.7	4030	45.8	1164	191.6	4867
			Vertical Supply/ Return w/ RE Fan	35	6544	2971	158.9	4037	45.8	1164	191.6	4867
				40	7085	3217	185.1	4703	45.8	1164	208.2	5288
				50	7300	3314	188.0	4776	45.8	1164	208.2	5288
				55	9458	4294	211.0	5358	45.8	1164	273.2	6939
				60	9513	4319	210.5	5347	45.8	1164	273.2	6939
				70	9853	4473	249.0	6325	40.2	1021	250.2	6355
48P	2,3,6,7	B,D,H	48 P2, P3, P6, P7 Low Gas Heat	30	6894	3130	170.1	4321	45.8	1164	191.6	4867
			Vertical Supply/ Return	35	7044	3198	170.5	4330	45.8	1164	191.6	4867
				40	7585	3444	197.3	5013	45.8	1164	208.2	5288
				50	7800	3541	197.2	5008	45.8	1164	208.2	5288
				55	10448	4743	227.3	5774	45.8	1164	273.2	6939
				60	10503	4768	226.8	5760	45.8	1164	273.2	6939
				70	10843	4923	243.0	6173	40.2	1021	250.2	6355
48P	2,3,6,7	C,E,J	48 P2, P3, P6, P7 High Gas Heat	30	7024	3189	169.2	4298	45.8	1164	191.6	4867
			Vertical Supply/ Return	35	7174	3257	169.6	4307	45.8	1164	191.6	4867
				40	7715	3503	196.5	4990	45.8	1164	208.2	5288
				50	7930	3600	199.3	5061	45.8	1164	208.2	5288
				55	10578	4802	227.4	5777	45.8	1164	273.2	6939
				60	10633	4827	226.9	5763	45.8	1164	273.2	6939
				70	10973	4982	243.2	6176	40.2	1021	250.2	6355
50P	2,3,6,7	R,S,T,V,W	50 P2, P3, P6 ,P7	30	6894	3130	176.6	4486	45.8	1164	191.6	4867
			Vertical Supply/ Return	35	7044	3198	179.9	4570	45.8	1164	191.6	4867
			w/ Extended Chassis	40	7585	3444	207.4	5268	45.8	1164	208.2	5288
			w/ Return Fan	50	7800	3541	210.6	5350	45.8	1164	208.2	5288
				55	10008	4544	230.0	5842	45.8	1164	273.2	6939
				60	10063	4569	229.6	5833	45.8	1164	273.2	6939
				70	10403	4723	263.4	6689	40.2	1021	250.2	6355
48P	2,3,6,7	P,R,W	48 P2, P3, P6, P7	30	7394	3357	188.0	4776	45.8	1164	191.6	4867
			Vertical Supply/ Return	35	7544	3425	191.6	4867	45.8	1164	191.6	4867
			w/ Return Fan	40	8085	3671	220.7	5607	45.8	1164	208.2	5288
			Low Gas Heat	50	8300	3768	224.3	5697	45.8	1164	208.2	5288
			Extended Chassis	55	10998	4993	241.2	6125	45.8	1164	273.2	6939
				60	11053	5018	240.6	6111	45.8	1164	273.2	6939
				70	11393	5172	240.6	6112	40.2	1021	250.2	6355
48P	2,3,6,7	Q,S,X	48 P2, P3, P6, P7	30	7524	3416	187.4	4760	45.8	1164	191.6	4867
			Vertical Supply/ Return	35	7674	3484	190.6	4840	45.8	1164	191.6	4867
			w/ Return Fan	40	8215	3730	218.0	5536	45.8	1164	208.2	5288
			High Gas Heat	50	8430	3827	221.2	5618	45.8	1164	208.2	5288
			Extended Chassis	55	11128	5052	241.3	6128	45.8	1164	273.2	6939
				60	11183	5077	240.7	6114	45.8	1164	273.2	6939
				70	11523	5231	276.3	7019	40.2	1021	250.2	6355

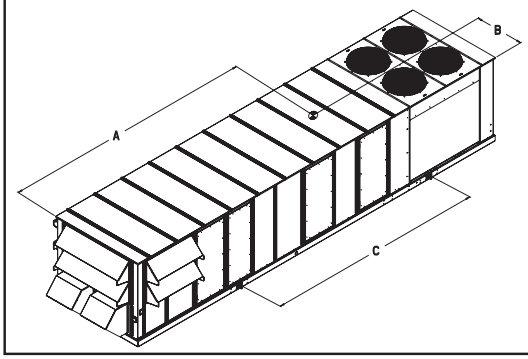

NOTE:
1. **Weights do not include economizer or power exhaust.**
2. **Label only for units size 30-70.**

48ZZ501077 C

Fig. 9 — Rigging Label — 030-070 Units

⚠ CAUTION - NOTICE TO RIGGERS:

ALL PANELS MUST BE IN PLACE WHEN RIGGING.

NOTE: Rig with four cables and spread with two 95 inch (2413 MM) spreader bars.

Position			Units	Size	Weight		Center of Gravity Dimensions				Lifting Lugs			
							A		B		C		D	
1,2,3	4	5			Lbs	Kgs	Inches	Millimeters	Inches	Millimeters	Inches	Millimeters	Inches	Millimeters
48P	2,3,4,5	B,D,H	48 P2, P3, P4, P5, P6,P7,P8,P9 Low Gas Heat	75	10665	4842	253.1	6429	40.2	1021	255.7	6495	111.3	2827
	6,7,8,9		Vertical Supply/ Return	90	11265	5114	260.9	6628	41.5	1054	255.7	6495	110.4	2804
			Horizontal Supply/ Return	100	11285	5123	260.0	6603	41.5	1054	255.7	6495	110.4	2804
48P	2,3,4,5	C,E,J	48 P2, P3, P4, P5, P6,P7,P8,P9 High Gas Heat	75	10795	4901	254.4	6462	40.2	1021	255.7	6495	111.3	2827
	6,7,8,9		Vertical Supply/ Return	90	11395	5173	262.1	6657	41.5	1054	255.7	6495	110.4	2804
			Horizontal Supply/ Return	100	11415	5182	261.3	6637	41.5	1054	255.7	6495	110.4	2804
48P	2,3,4,5	P,R,W	48 P2, P3, P4, P5, P6,P7,P8,P9 Low Gas Heat	75	11215	5092	266.7	6775	40.2	1021	280.8	7132	139.4	3541
	6,7,8,9		Vertical Supply/ Return	90	11815	5364	274.7	6976	41.5	1054	280.8	7132	139.4	3541
			Horizontal Supply/ Return Extended Chassis	100	11835	5373	273.4	6944	41.5	1054	280.8	7132	139.4	3541
48P	2,3,4,5	Q,S,X	48 P2, P3, P4, P5, P6,P7,P8,P9 High Gas Heat	75	11345	5151	268.0	6808	40.2	1021	280.8	7132	139.4	3541
	6,7,8,9		Vertical Supply/ Return	90	11945	5423	275.8	7005	41.5	1054	280.8	7132	139.4	3541
			Horizontal Supply/ Return Extended Chassis	100	11965	5432	274.7	6978	41.5	1054	280.8	7132	139.4	3541
50P	2,3,4,5	-,B,C	50 P2, P3, P4, P5, P6, P7, P8, P9	75	10265	4660	250.1	6354	40.2	1021	255.7	6495	111.3	2827
	6,7,8,9		Vertical Supply/ Return	90	10865	4933	258.4	6562	41.5	1054	255.7	6495	110.4	2804
			Horizontal Supply/ Return	100	10885	4942	257.3	6535	41.5	1054	255.7	6495	110.4	2804
50P	2,3,4,5	R,T,V,W	50 P2, P3, P4, P5, P6, P7, P8, P9	75	10815	4910	264.6	6722	40.2	1021	280.8	7132	139.4	3541
	6,7,8,9		Vert, Horz Supply/ Return	90	11415	5182	272.9	6932	41.5	1054	280.8	7132	139.4	3541
			w/ Extended Chassis	100	11435	5191	271.6	6899	41.5	1054	280.8	7132	139.4	3541
50P	2,3,4,5	-,B,C	50 P2, P3, P4, P5, P6, P7, P8, P9	75	11921	5412	220.1	5590	40.2	1021	255.7	6495	111.3	2827
	6,7,8,9		Vert Supply/Return w/ RE Fan	90	12521	5685	228.4	5800	41.5	1054	255.7	6495	110.4	2804
			Horz Supply Vert Return w/ RE Fan	100	12541	5694	227.8	5786	41.5	1054	255.7	6495	110.4	2804
48P	2,3,4,5	B,D,H	48 P2,P3,P4,P5,P6,P7,P8,P9 Low Gas Heat	75	12321	5594	224.6	5706	40.2	1021	255.7	6495	111.3	2827
	6,7,8,9		Vert Supply/Return w/ RE Fan	90	12921	5866	232.6	5908	41.5	1054	255.7	6495	110.4	2804
			Horz Supply Vert Return w/ RE Fan	100	12941	5875	230.4	5853	41.5	1054	255.7	6495	110.4	2804
48P	2,3,4,5	C,E,J	48 P2,P3,P4,P5,P6,P7,P8,P9 High Gas Heat	75	12451	5653	226.9	5764	40.2	1021	255.7	6495	111.3	2827
	6,7,8,9		Vert Supply/Return w/ RE Fan	90	13051	5925	233.7	5936	41.5	1054	255.7	6495	110.4	2804
			Horz Supply Vert Return w/ RE Fan	100	13071	5934	232.9	5915	41.5	1054	255.7	6495	110.4	2804
50P	2,3,4,5	R,T,V,W	50 P2, P3, P4, P5, P6, P7, P8, P9	75	12471	5662	231.7	5885	40.2	1021	280.8	7132	139.4	3541
	6,7,8,9		Vert Sup/Ret, Horz Sup/ Vert Ret	90	13071	5934	240.1	6098	41.5	1054	280.8	7132	139.4	3541
			w/ RE Fan, w/ Ext Chassis	100	13091	5943	239.2	6075	41.5	1054	280.8	7132	139.4	3541
48P	2,3,4,5	P,R,W	48 P2,P3,P4,P5,P6,P7,P8,P9 Low Gas Heat	75	12871	5843	236.2	6000	40.2	1021	280.8	7132	139.4	3541
	6,7,8,9		Vert Sup/Ret, Horz Sup/ Vert Ret	90	13471	6116	244.3	6205	41.5	1054	280.8	7132	139.4	3541
			w/ RE Fan, w/ Ext Chassis	100	13491	6125	241.8	6142	41.5	1054	280.8	7132	139.4	3541
48P	2,3,4,5	Q,S,X	48 P2,P3,P4,P5,P6,P7,P8,P9 High Gas Heat	75	13001	5902	238.5	6058	40.2	1021	280.8	7132	139.4	3541
	6,7,8,9		Vert Sup/Ret, Horz Sup/ Vert Ret	90	13601	6175	245.4	6234	41.5	1054	280.8	7132	139.4	3541
			w/ RE Fan, w/ Ext Chassis	100	13621	6184	244.2	6203	41.5	1054	280.8	7132	139.4	3541
48P	2,3,4,5	B,D,H	48 P2,P3,P4,P5,P6,P7,P8,P9 Low Gas Heat	75	13499	6129	290.1	7367	40.2	1021	312.1	7927	162.6	4130
	6,7,8,9		Vert Sup/Ret, Horz Sup/Ret	90	14097	6400	297.7	7561	41.5	1054	312.1	7927	171.4	4354
			w/ Hi Cap PE	100	14119	6410	297.1	7546	41.5	1054	312.1	7927	171.4	4354
48P	2,3,4,5	C,E,J	48 P2,P3,P4,P5,P6,P7,P8,P9 High Gas Heat	75	13629	6188	291.3	7400	40.2	1021	312.1	7927	162.6	4130
	6,7,8,9		Vert Sup/Ret, Horz Sup/Ret	90	14227	6459	298.9	7593	41.5	1054	312.1	7927	171.4	4354
			w/ Hi Cap PE	100	14249	6469	298.2	7575	41.5	1054	312.1	7927	171.4	4354
50P	2,3,4,5	-,B,C	50 P2, P3, P4, P5, P6, P7, P8, P9	75	13099	5947	287.1	7293	40.2	1021	312.1	7927	162.6	4130
	6,7,8,9		Vert Sup/Ret, Horz Sup/Ret	90	13697	6218	295.1	7496	41.5	1054	312.1	7927	171.4	4354
			w/ Hi Cap PE	100	13719	6228	294.4	7478	41.5	1054	312.1	7927	171.4	4354
48P	2,3,4,5	P,R,W	48 P2,P3,P4,P5,P6,P7,P8,P9 Low Gas Heat	75	14049	6378	483.5	12280	40.2	1021	337.3	8567	151.7	3853
	6,7,8,9		Vert Sup/Ret, Horz Sup/Ret	90	14647	6650	484.3	12302	41.5	1054	337.3	8567	196.7	4996
			w/ Hi Cap PE w/ Ext Chassis	100	14669	6660	493.8	12542	41.5	1054	337.3	8567	196.7	4996
48P	2,3,4,5	Q,S,X	48 P2,P3,P4,P5,P6,P7,P8,P9 High Gas Heat	75	14179	6437	483.5	12280	40.2	1021	337.3	8567	151.7	3853
	6,7,8,9		Vert Sup/Ret, Horz Sup/Ret	90	14777	6709	484.3	12301	41.5	1054	337.3	8567	196.7	4996
			w/ Hi Cap PE w/ Ext Chassis	100	14799	6719	493.8	12542	41.5	1054	337.3	8567	196.7	4996
50P	2,3,4,5	R,T,V,W	50 P2, P3, P4, P5, P6, P7, P8, P9	75	13649	6197	483.5	12281	40.2	1021	337.3	8567	151.7	3853
	6,7,8,9		Vert Sup/Ret, Horz Sup/Ret	90	14247	6468	484.4	12304	41.5	1054	337.3	8567	196.7	4996
			w/ Hi Cap PE w/ Ext Chassis	100	14269	6478	493.8	12543	41.5	1054	337.3	8567	196.7	4996

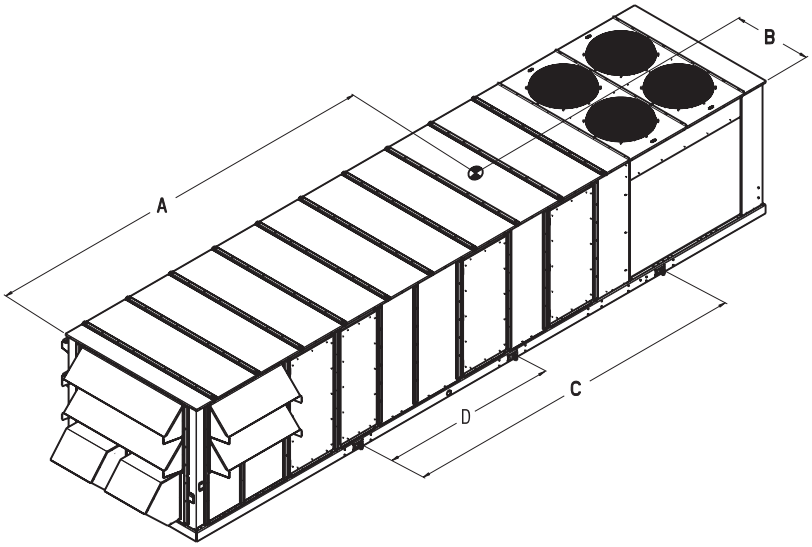

48ZZ501078 C

Fig. 10 — Rigging Label — 075-100 Units

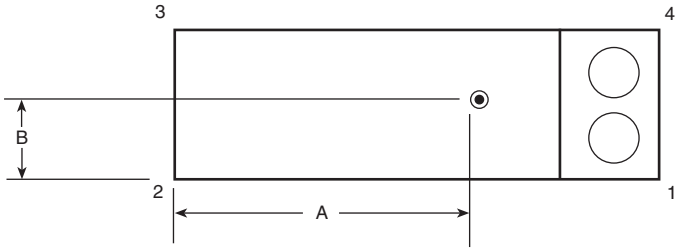

Units	SIZE	CORNER WEIGHTS (lb)				TOTAL (lb)	A in.	B in.
		1	2	3	4			
50 P2, P3, P6, P7	30	1848	914	913	1845	5519	159.16	45.81
Vertical Supply/ Return	35	1901	935	934	1898	5669	159.42	45.81
	40	1826	1281	1279	1824	6210	186.11	45.81
	50	1921	1293	1291	1919	6425	189.25	45.81
	55	2204	1914	1911	2201	8230	212.64	45.81
	60	2215	1930	1928	2212	8285	212.30	45.81
	70	2984	1860	1452	2329	8625	250.48	40.20
50 P2, P3, P4, P5, P6, P7, P8, P9	75	3219	2545	1987	2514	10265	250.14	40.20
Vertical Supply/ Return	90	3108	2839	2348	2570	10865	258.36	41.50
Horizontal Supply/ Return	100	3101	2857	2363	2564	10885	257.29	41.50
50 P2, P3, P6,P7	30	1727	1184	1183	1725	5819	152.25	45.81
Vertical Supply/ Return w/ Ext Plenum	35	1770	1217	1215	1768	5969	152.09	45.81
	40	1749	1508	1506	1746	6510	180.16	45.81
50 P4, P5, P8,P9	50	1842	1523	1521	1839	6725	183.65	45.81
Horizontal Supply/ Return	55	2321	2072	2069	2318	8780	231.70	45.81
	60	2331	2089	2087	2328	8835	231.27	45.81
	70	2847	2305	1800	2223	9175	247.50	40.20

Units with Optional Extended Chassis	SIZE	CORNER WEIGHTS (lb)				TOTAL (lb)	A in.	B in.
		1	2	3	4			
50 P2, P3, P6, P7	30	2009	1003	1002	2006	6019	175.44	45.81
Vertical Supply/ Return	35	2067	1019	1018	2064	6169	176.19	45.81
w/ Extended Chassis	40	1992	1365	1363	1989	6710	202.80	45.81
	50	2086	1378	1377	2084	6925	205.83	45.81
	55	2350	2043	2040	2347	8780	226.02	45.81
	60	2361	2060	2057	2357	8835	225.63	45.81
	70	3159	1993	1556	2467	9175	264.78	40.20
50 P2, P3, P4, P5, P6, P7, P8, P9	75	3398	2676	2089	2653	10815	264.64	40.20
Vert, Horz Supply/ Return	90	3282	2966	2453	2714	11415	272.91	41.50
w/ Extended Chassis	100	3272	2987	2470	2706	11435	271.63	41.50
50 P2, P3, P6, P7	30	1872	1290	1288	1869	6319	166.83	45.81
Vertical Supply/ Return w/ Ext Plenum	35	1919	1318	1316	1916	6469	167.08	45.81
w/ Extended Chassis	40	1899	1608	1606	1896	7010	195.31	45.81
50 P4, P5, P8, P9	50	1992	1623	1620	1990	7225	198.82	45.81
Horizontal Supply/ Return	55	2467	2201	2198	2464	9330	245.14	45.81
w/ Extended Chassis	60	2476	2219	2216	2473	9385	244.65	45.81
	70	2683	2183	2180	2679	9725	260.81	45.81

LEGEND

PE — Power Exhaust

NOTE: The weight distribution and center of gravity information include the impact of an economizer, the largest indoor fan motor, and a VFD (variable frequency drive). On units with a return fan or high-capacity power exhaust, the largest motors and VFD are also included. These weights do not include the impact of other factory-installed options such as barometric relief, power exhaust, high-capacity indoor coil, hot water coil, or indoor fan.

Fig. 11 — Weight Distribution and Center of Gravity

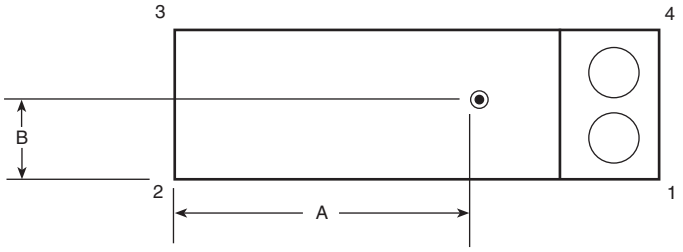

Units with Optional Return Fan	SIZE	CORNER WEIGHTS (lb)				TOTAL (lb)	A in.	B in.
		1	2	3	4			
50 P2, P3, P6, P7	30	2142	1070	1068	2139	6419	158.64	45.81
Vertical Supply/ Return w/ RE Fan	35	2196	1091	1089	2193	6569	158.93	45.81
	40	2080	1478	1476	2077	7110	185.12	45.81
	50	2176	1489	1487	2173	7325	188.00	45.81
	55	2523	2230	2227	2520	9500	210.91	45.81
	60	2532	2248	2245	2529	9555	210.46	45.81
	70	3402	2154	1682	2656	9895	248.98	40.20
50 P2, P3, P4, P5, P6, P7, P8, P9	75	3290	3405	2658	2568	11921	220.09	40.20
Vert Supply/Return w/ RE Fan	90	3166	3688	3049	2618	12521	228.36	41.50
Horz Supply Vert Return w/ RE Fan	100	3163	3702	3061	2615	12541	227.79	41.50
50 P2, P3, P6 ,P7	30	2324	1138	1136	2321	6919	176.60	45.81
Vertical Supply/ Return	35	2419	1118	1117	2416	7069	179.90	45.81
w/ Extended Chassis	40	2310	1497	1495	2307	7610	207.38	45.81
w/ Return Fan	50	2412	1503	1501	2409	7825	210.59	45.81
	55	2737	2292	2289	2733	10050	229.95	45.81
	60	2747	2308	2305	2744	10105	229.59	45.81
	70	3577	2289	1787	2793	10445	263.32	40.20
50 P2, P3, P4, P5, P6, P7, P8, P9	75	3430	3573	2790	2678	12471	231.69	40.20
Vert Sup/Ret, Horz Sup/ Vert Ret	90	3306	3849	3182	2734	13071	240.08	41.50
w/ RE Fan, w/ Ext Chassis	100	3299	3867	3198	2728	13091	239.18	41.50

Units with Optional High-Capacity Power Exhaust	SIZE	CORNER WEIGHTS (lb)				TOTAL (lb)	A in.	B in.
		1	2	3	4			
50 P2, P3, P4, P5, P6, P7, P8, P9	75	4006	3350	2615	3128	13099	287.12	40.20
Vert Sup/Ret, Horz Sup/Ret	90	3857	3641	3010	3189	13697	295.12	41.50
w/ Hi Cap PE	100	3854	3655	3023	3187	13719	294.43	41.50
50 P2, P3, P4, P5, P6, P7, P8, P9	75	6709	956	746	5238	13649	483.51	40.20
Vert Sup/Ret, Horz Sup/Ret	90	6308	1491	1233	5216	14247	484.40	41.50
w/ Hi Cap PE w/ Ext Chassis	100	6441	1370	1133	5326	14269	493.84	41.50

LEGEND

PE — Power Exhaust

NOTE: The weight distribution and center of gravity information include the impact of an economizer, the largest indoor fan motor, and a VFD (variable frequency drive). On units with a return fan or high-capacity power exhaust, the largest motors and VFD are also included. These weights do not include the impact of other factory-installed options such as barometric relief, power exhaust, high-capacity indoor coil, hot water coil, or indoor fan.

Fig. 11 — Weight Distribution and Center of Gravity (cont)

Step 8 — Connect Condensate Drain

There are a total of five drain connections required on each unit: one primary drain (on right-hand side of the unit) and four secondary drains (two on each side of unit).

PRIMARY DRAIN

The primary drain is a 2-in. FPT pipe connection located on the right-hand side of the unit looking at the unit from the return air end. See Fig. 12-21. Figure 22 shows the additional chassis length for optional extended chassis units.

With field-supplied fittings and pipe sections, plumb the primary condensate drain to the 2-in. FPT connector on the base rail. Use a trap height of at least 4-in. for size 030-070 units and 7-in. for size 075-105 units. See Fig. 23 and 24. Apply a bead of RTV or similar sealant around the pipe joint at the connector in the base rail.

SECONDARY DRAINS (UNITS INSTALLED ON CURB)

There are two secondary drain connections on each side of the unit. There are secondary drains on each side of the unit in the filter section and one on each side of the unit in the supply fan section. There are labels marking each location on the unit base rail. See Fig. 12-21.

Locate the four $1^1/_4$-in. drain coupling assemblies and mounting screws (shipped in a bag taped to the basepan in the supply fan section, located behind the access panel marked FAN SECTION). The drain couplings are a 10-gage plate with a $1^1/_4$ in. half coupling welded to the plate.

At each secondary drain hole location, there is a $1^3/_8$-in. hole predrilled in the bottom of the base rail, surrounded by four 0.20-in. engagement holes. Install a drain coupling assembly using screws provided at each secondary drain hole location. See Fig. 25. Do not attach any drain coupling assemblies in the condenser section base rail.

Using field-supplied fittings and pipe sections, assemble U-traps at each secondary drain fitting. See Fig. 26. Provide a minimum size of ½-in. pipe for secondary drains. Use a trap at least 4-in. deep for size 030-070 units and 7-in. deep for size 075-105 units. Apply a bead of RTV or similar sealant around the drain assemblies. See Fig. 26.

Consult local plumbing codes for direction on joining multiple drain lines. Total size of any combined line does not need to exceed nominal 2-in. size of primary drain connection.

Fill the U-traps at the secondary drain locations prior to unit start-up. Also check the U-traps before each cooling season to ensure the traps are filled and functioning properly.

SECONDARY DRAINS (UNITS INSTALLED ON STEEL BEAM OR SLAB)

There are two secondary drain connections required on each side of the unit. There are secondary drains on the bottom of the base rail on each side of the unit in the filter section and on each side of the unit in the supply fan section. There are labels marking each location on the unit base rail. See Fig. 12-21. Drain holes will need to be drilled in these locations at the side of the base rail. The existing secondary drain holes in the bottom of the base rail must be sealed. Prior to final positioning of the unit, apply a bead of RTV or similar sealant around each secondary drain hole in the bottom of the unit base rail and install field-supplied metal seal plate, then position the unit into final location. See Fig. 27.

Using field-supplied fittings and pipe sections, assemble U-traps at each secondary drain fitting. See Fig. 26. Provide a minimum size of ½-in. pipe for secondary drains. Use a trap at least 4-in. deep for size 030-070 units and 7-in. deep for size 075-105 units. Apply a bead of RTV or similar sealant around the drain assemblies. See Fig. 24.

Locate the four $1^1/_4$-in. drain coupling assemblies and mounting screws (shipped in a bag taped to the basepan in the supply fan section, located behind the access panel marked FAN SECTION). The drain couplings are a 10-gage plate with a $1^1/_4$ in. half coupling welded to the plate.

After final positioning of the unit, perform the following procedure:

1. At each of the four secondary drain location (marked with labels on the unit base rail), position the drain coupling assembly in the side of the base rail. Mark the screw holes and the drain hole locations on the base rail.
2. Drill holes for drain outlet (use $1^3/_8$-in. hole saw) and for the mounting screws (use $^3/_{16}$-in. drill bit).
3. Install a drain coupling assembly using screws provided at each secondary drain hole location.
4. Using field-supplied fittings and pipe sections, assemble U-traps at each secondary drain fitting. See Fig. 24. Provide minimum size of $^1/_2$-in. pipe for secondary drains. Use a trap at least 4-in. deep for size 030-070 units and 7-in. deep for size 075-105 units.
5. Apply a bead of RTV or similar sealant around the drain assemblies.

Consult local plumbing codes for direction on joining multiple drain lines. Total size of any combined line does not need to exceed nominal 2-in. size of primary drain connection.

Fill the U-traps at the secondary drain locations prior to unit start-up. Also check the U-traps before each cooling season to ensure the traps are filled and functioning properly.

NOTES:
1. DIMENSIONS IN [ ] ARE IN MILLIMETERS.
2. ⊕ UNIT WEIGHT AND CENTER OF GRAVITY INCLUDES ECONOMIZER, LARGEST INDOOR FAN MOTOR AND HIGH CAPACITY EVAPORATOR COIL
3. UNIT CLEARANCES
   TOP - DO NOT RESTRICT CONDENSER FANS
   CONTROL BOX END - 6′-0″
   SIDES - 6′-0″
   ECONOMIZER END - 6′-0″(EXCEPT POWER EXHAUST UNITS 10′-0″)
4. DOWNSHOT DUCTS DESIGNED TO BE ATTACHED TO ACCESSORY ROOF CURB. IF UNIT IS MOUNTED ON DUNNAGE,IT IS RECOMMENDED THE DUCTS BE SUPPORTED BY CROSS BRACES AS DONE ON THE ACCESSORY ROOF CURB.
5. WHEN THE UNIT IS SLAB MOUNTED, PLUG THE FACTORY DRILLED AUXILIARY CONDENSATE DRAIN HOLES.
6. ECONOMIZER SIDE HOODS ARE FOLDED INSIDE UNIT FOR SHIPPING.

UNIT SIZE	WEIGHT		A		B	
	LBS.	KGS.	MM	FT. IN.	MM	FT.IN
030	5519	2504	4043	13′-3 3/16″	1164	3′-9 13/16″
035	5669	2572	4049	13′-3 7/16″	1164	3′-9 13/16″

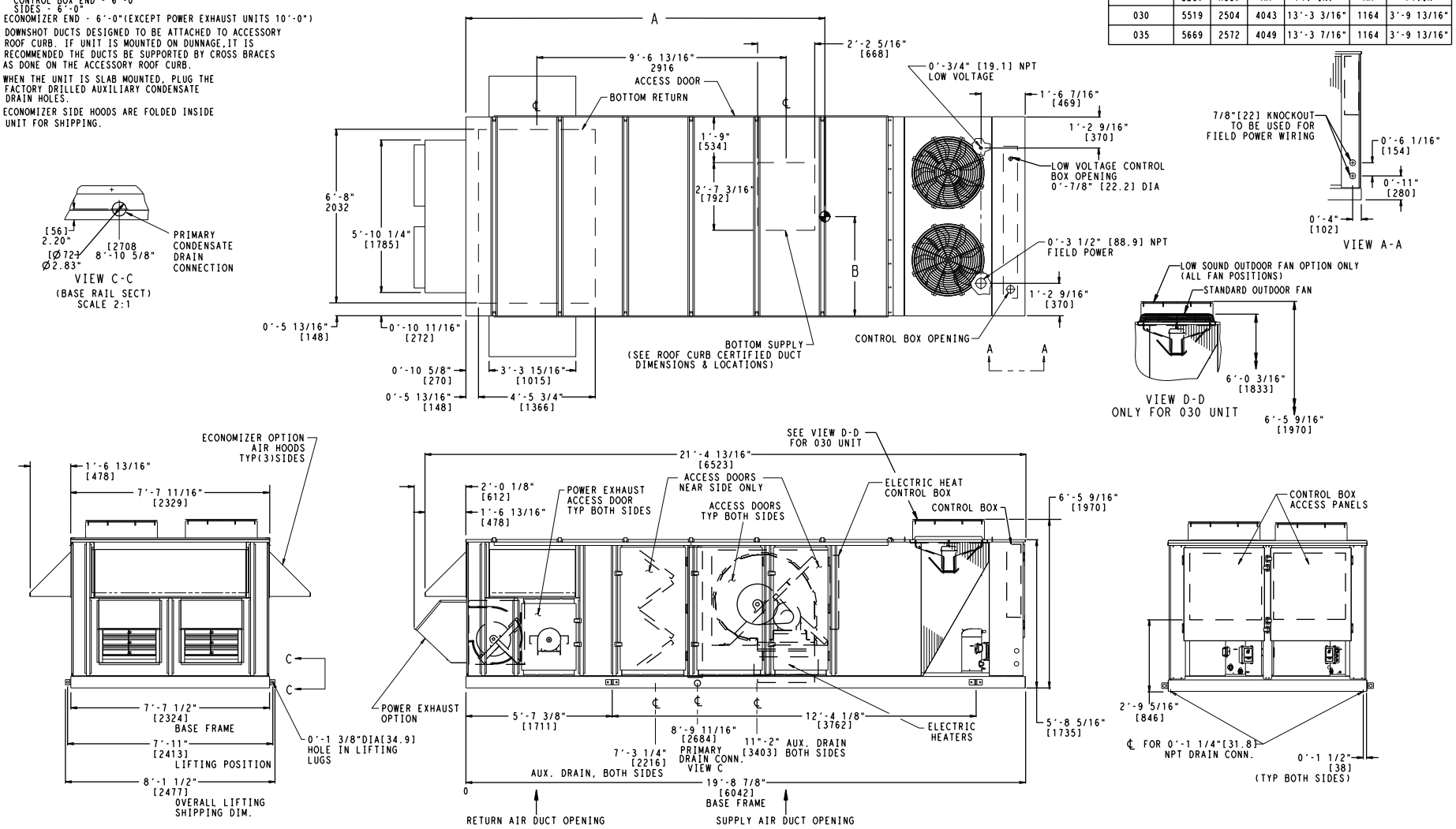

Fig. 12 — Base Unit Dimensional Drawing — 50P2,P3,P6,P7030,035 (Standard Chassis Unit Shown)

NOTES:
1. DIMENSIONS IN [ ] ARE IN MILLIMETERS.
2. UNIT WEIGHT AND CENTER OF GRAVITY INCLUDES ECONOMIZER, LARGEST INDOOR FAN MOTOR AND HIGH CAPACITY EVAPORATOR COIL.
3. UNIT CLEARANCES
   TOP - DO NOT RESTRICT CONDENSER FANS
   CONTROL BOX END - 6′-0"
   SIDES - 6′-0"
   ECONOMIZER END - 6′-0"(EXCEPT POWER EXHAUST UNITS 10′-0")
4. SUGGESTED FIELD CONNECTIONS TO BE MADE INSIDE OR OUTSIDE OF 32.5 mm FLANGE.
5. WHEN THE UNIT IS SLAB MOUNTED, PLUG THE FACTORY DRILLED AUXILIARY CONDENSATE DRAIN HOLES.
6. ECONOMIZER SIDE HOODS ARE FOLDED INSIDE UNIT FOR SHIPPING.

UNIT SIZE	WEIGHT		A		B	
	LBS.	KGS.	MM	FT. IN.	MM	FT.IN.
030	5819	2640	3867	12′-8 1/4"	1164	3′-9 13/16"
035	5969	2708	3863	12′-8 1/16"	1164	3′-9 13/16"

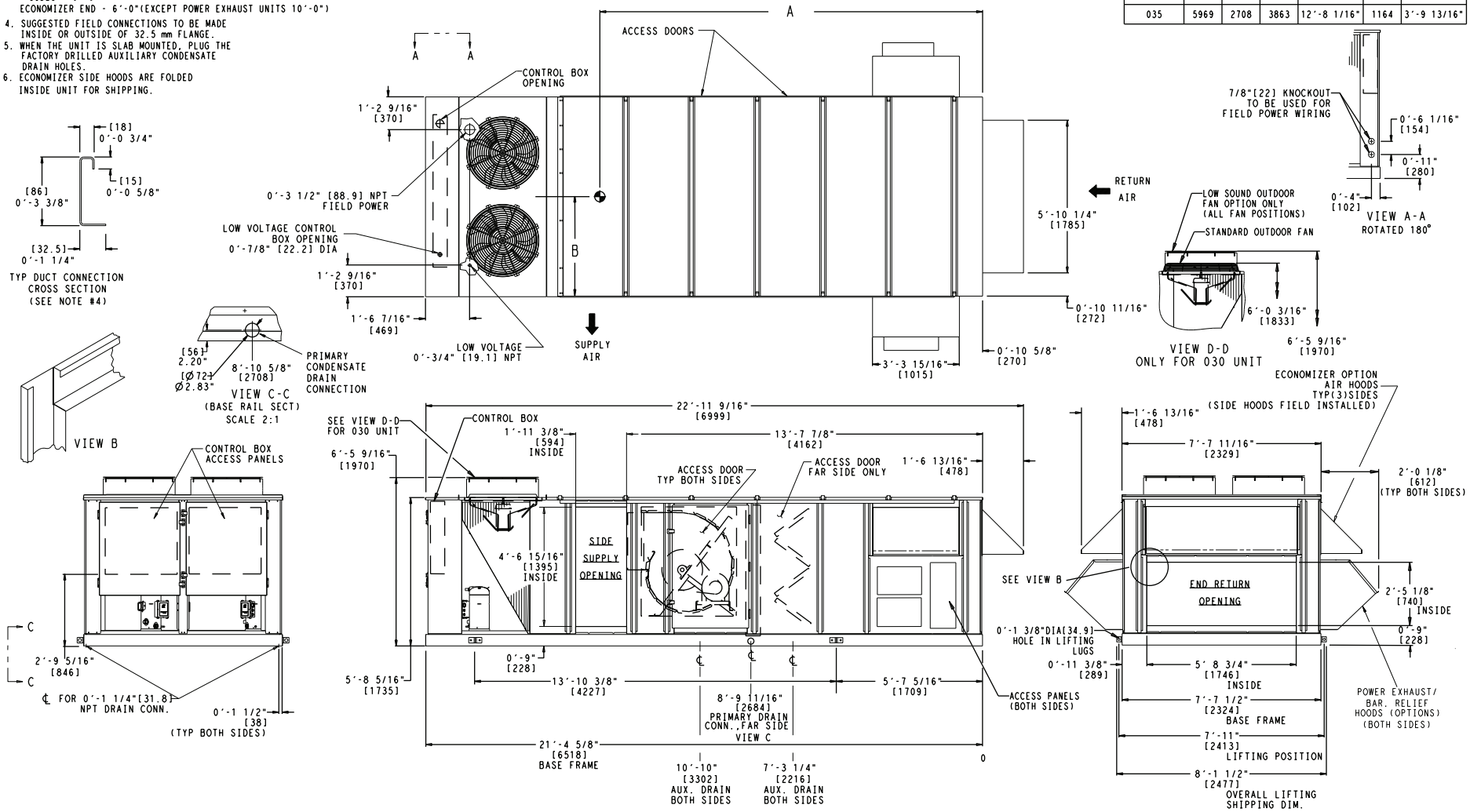

Fig. 13 — Base Unit Dimensional Drawing — 50P4,P5,P8,P9030,035 (Standard Chassis Unit Shown)

NOTES:
1. DIMENSIONS IN [ ] ARE IN MILLIMETERS.
2. UNIT WEIGHT AND CENTER OF GRAVITY INCLUDES ECONOMIZER, LARGEST INDOOR FAN MOTOR AND HIGH CAPACITY EVAPORATOR COIL.
3. UNIT CLEARANCES
   TOP - DO NOT RESTRICT CONDENSER FANS
   CONTROL BOX END - 6'-0"
   SIDES - 6'-0"
   ECONOMIZER END - 6'-0"(EXCEPT POWER EXHAUST UNITS 10'-0")
4. DOWNSHOT DUCTS DESIGNED TO BE ATTACHED TO ACCESSORY ROOF CURB. IF UNIT IS MOUNTED ON DUNNAGE,IT IS RECOMMENDED THE DUCTS BE SUPPORTED BY CROSS BRACES AS DONE ON THE ACCESSORY ROOF CURB.
5. WHEN THE UNIT IS SLAB MOUNTED, PLUG THE FACTORY DRILLED AUXILIARY CONDENSATE DRAIN HOLES.
6. ECONOMIZER SIDE HOODS ARE FOLDED INSIDE UNIT FOR SHIPPING

UNIT SIZE	WEIGHT LBS.	WEIGHT KGS.	A MM	A FT. IN.
040	6210	2817	4727	15'-6 1/8"
050	6425	2914	4807	15'-9 5/16"

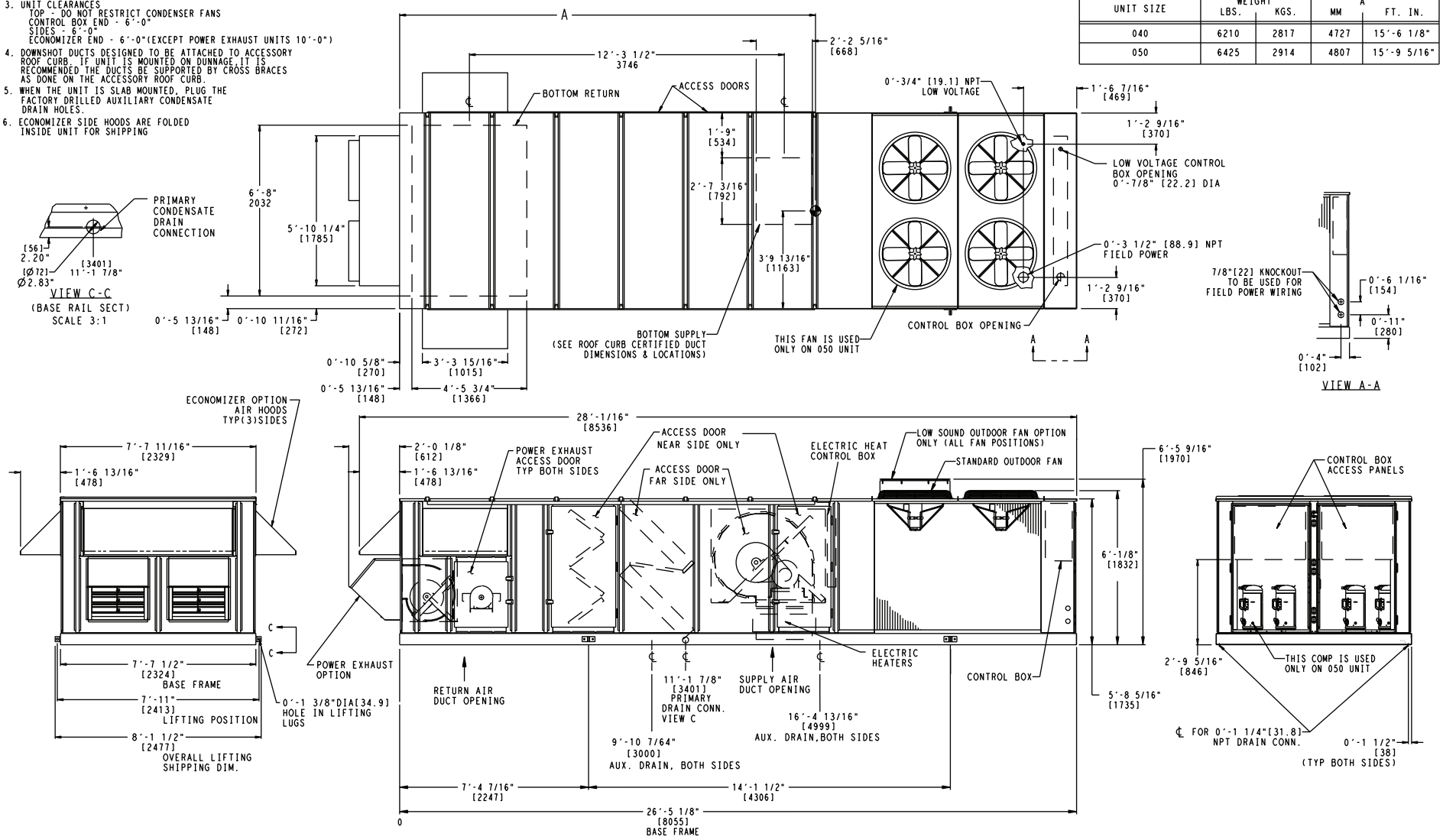

Fig. 14 — Base Unit Dimensional Drawing — 50P2,P3,P6,P7040-050 (Standard Chassis Unit Shown)

NOTES:
1. DIMENSIONS IN [ ] ARE IN MILLIMETERS.
2. ⊕ UNIT WEIGHT AND CENTER OF GRAVITY INCLUDES ECONOMIZER, LARGEST INDOOR FAN MOTOR AND HIGH CAPACITY EVAPORATOR COIL.
3. UNIT CLEARANCES
   TOP - DO NOT RESTRICT CONDENSER FANS
   CONTROL BOX END - 6'-0"
   SIDES - 6'-0"
   ECONOMIZER END - 6'-0"(EXCEPT POWER EXHAUST UNITS 10'-0")
4. SUGGESTED FIELD CONNECTIONS TO BE MADE INSIDE OR OUTSIDE OF 32.5 mm FLANGE.
5. WHEN THE UNIT IS SLAB MOUNTED, PLUG THE FACTORY DRILLED AUXILIARY CONDENSATE DRAIN HOLES.
6. ECONOMIZER SIDE HOODS ARE FOLDED INSIDE UNIT FOR SHIPPING.

UNIT SIZE	WEIGHT LBS.	WEIGHT KGS.	A MM	A FT. IN.
040	6510	2953	4576	15'-3/16"
050	6725	3050	4665	15'-3 11/16"

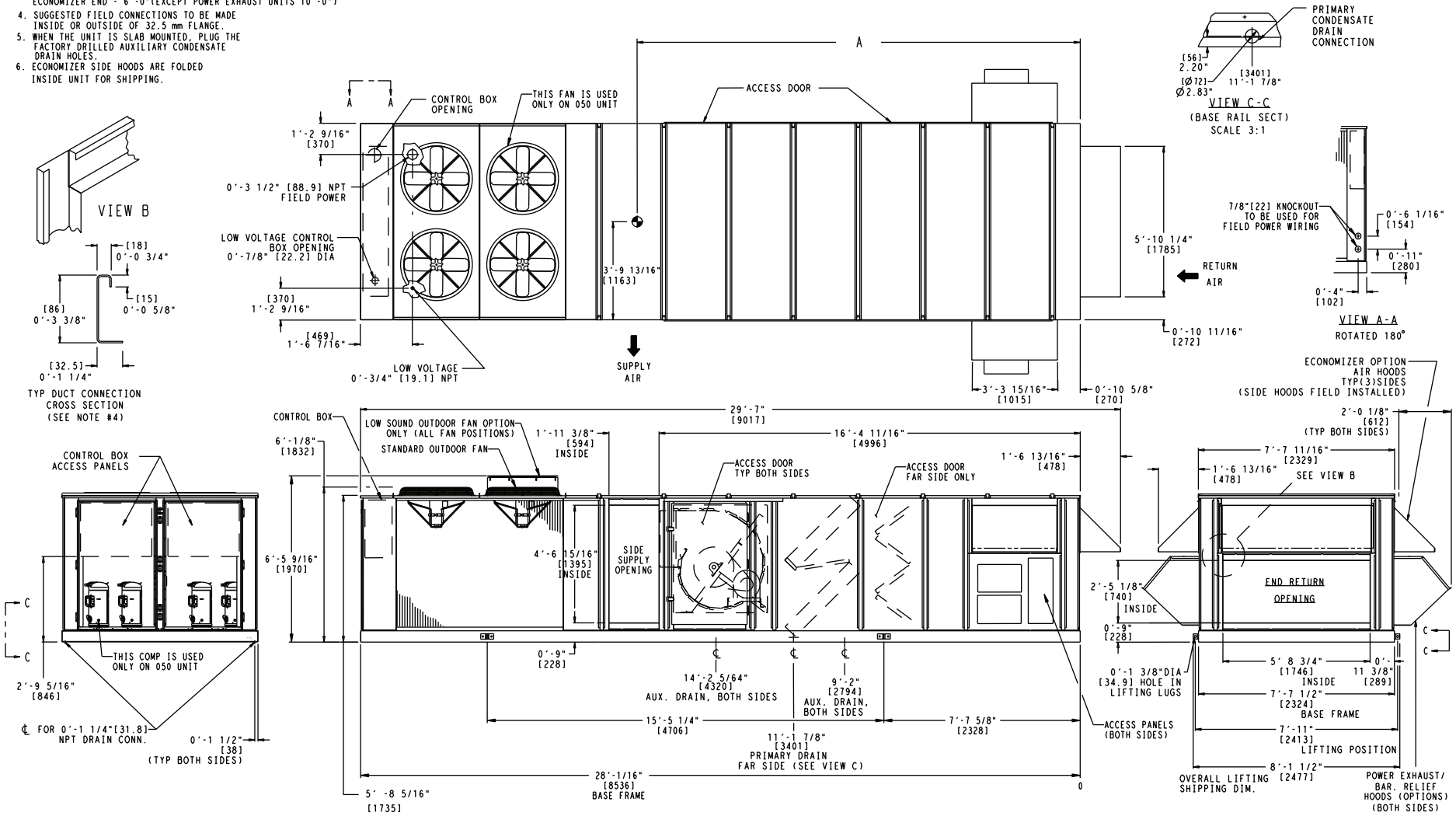

Fig. 15 — Base Unit Dimensional Drawing — 50P4,P5,P8,P9040-050 (Standard Chassis Unit Shown)

UNIT SIZE	WEIGHT LBS.	WEIGHT KGS.	A MM	A FT. IN.	B MM	B FT. IN.	C MM	C FT. IN.	D MM	D FT. IN.	E MM	E FT. IN.	F MM	F FT. IN.
055	8230	3733	2864	9′-4 3/4"	5363	17′-7 1/8"	5401	17′-8 5/8"	1163	3′-9 13/16"	10108	33′-1 15/16"	10492	34′-5 1/16"
060	8285	3758	2864	9′-4 3/4"	5363	17′-7 1/8"	5392	17′-8 5/16"	1163	3′-9 13/16"	10108	33′-1 15/16"	10492	34′-5 1/16"

NOTES:
1. DIMENSIONS IN [ ] ARE IN MILLIMETERS.
2. UNIT WEIGHT AND CENTER OF GRAVITY INCLUDES ECONOMIZER, LARGEST INDOOR FAN MOTOR AND HIGH CAPACITY EVAPORATOR COIL.
3. UNIT CLEARANCES
   TOP - DO NOT RESTRICT CONDENSER FANS
   CONTROL BOX END - 6′-0"
   SIDES - 6′-0"
   ECONOMIZER END - 6′-0"(EXCEPT POWER EXHAUST UNITS 10′-0")
4. DOWNSHOT DUCTS DESIGNED TO BE ATTACHED TO ACCESSORY ROOF CURB. IF UNIT IS MOUNTED ON DUNNAGE,IT IS RECOMMENDED THE DUCTS BE SUPPORTED BY CROSS BRACES AS DONE ON THE ACCESSORY ROOF CURB.
5. WHEN THE UNIT IS SLAB MOUNTED, PLUG THE FACTORY DRILLED AUXILIARY CONDENSATE DRAIN HOLES.
6. ECONOMIZER SIDE HOODS ARE FOLDED INSIDE UNIT FOR SHIPPING

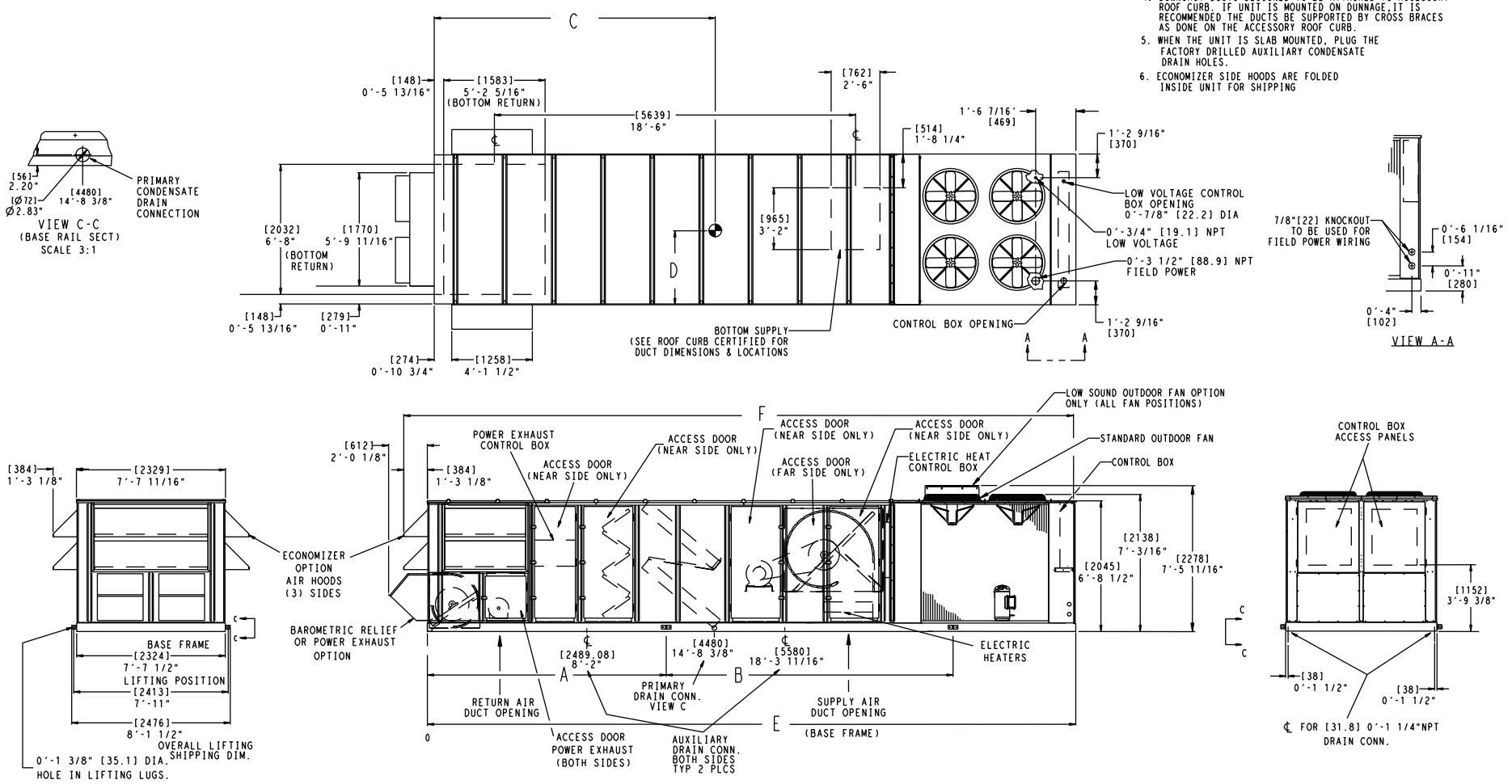

Fig. 16 — Base Unit Dimensional Drawing — 50P2,P3,P6,P7055,060 (Standard Chassis Unit Shown)

UNIT SIZE	WEIGHT LBS.	WEIGHT KGS.	A MM	A FT. IN.	B MM	B FT. IN.	C MM	C FT. IN.	D MM	D FT. IN.	E MM	E FT. IN.	F MM	F FT. IN.
055	8780	3983	2830	9′-3 3/4″	6427	21′-1″	5885	19′-3 11/16″	1163	3′-9 13/16″	11140	36′-6 9/16″	11524	37′-9 11/16″
060	8835	4008	2830	9′-3 3/4″	6427	21′-1″	5874	19′-3 5/16″	1163	3′-9 13/16″	11140	36′-6 9/16″	11524	37′-9 11/16″

NOTES:
1. DIMENSIONS IN [ ] ARE IN MILLIMETERS.
2. UNIT WEIGHT AND CENTER OF GRAVITY INCLUDES ECONOMIZER, LARGEST INDOOR FAN MOTOR AND HIGH CAPACITY EVAPORATOR COIL.
3. UNIT CLEARANCES
   TOP - - DO NOT RESTRICT CONDENSER FANS
   CONTROL BOX END - 6′-0″
   SIDES - 6′-0″ (EXCEPT POWER EXHAUST UNITS 10′-0″)
   ECONOMIZER END - 6′-0″
4. SUGGESTED FIELD CONNECTIONS TO BE MADE INSIDE OR OUTSIDE OF 32.5 mm FLANGE.
5. WHEN THE UNIT IS SLAB MOUNTED, PLUG THE FACTORY DRILLED AUXILIARY CONDENSATE DRAIN HOLES.
6. ECONOMIZER SIDE HOODS ARE FOLDED IN FOR SHIPPING.

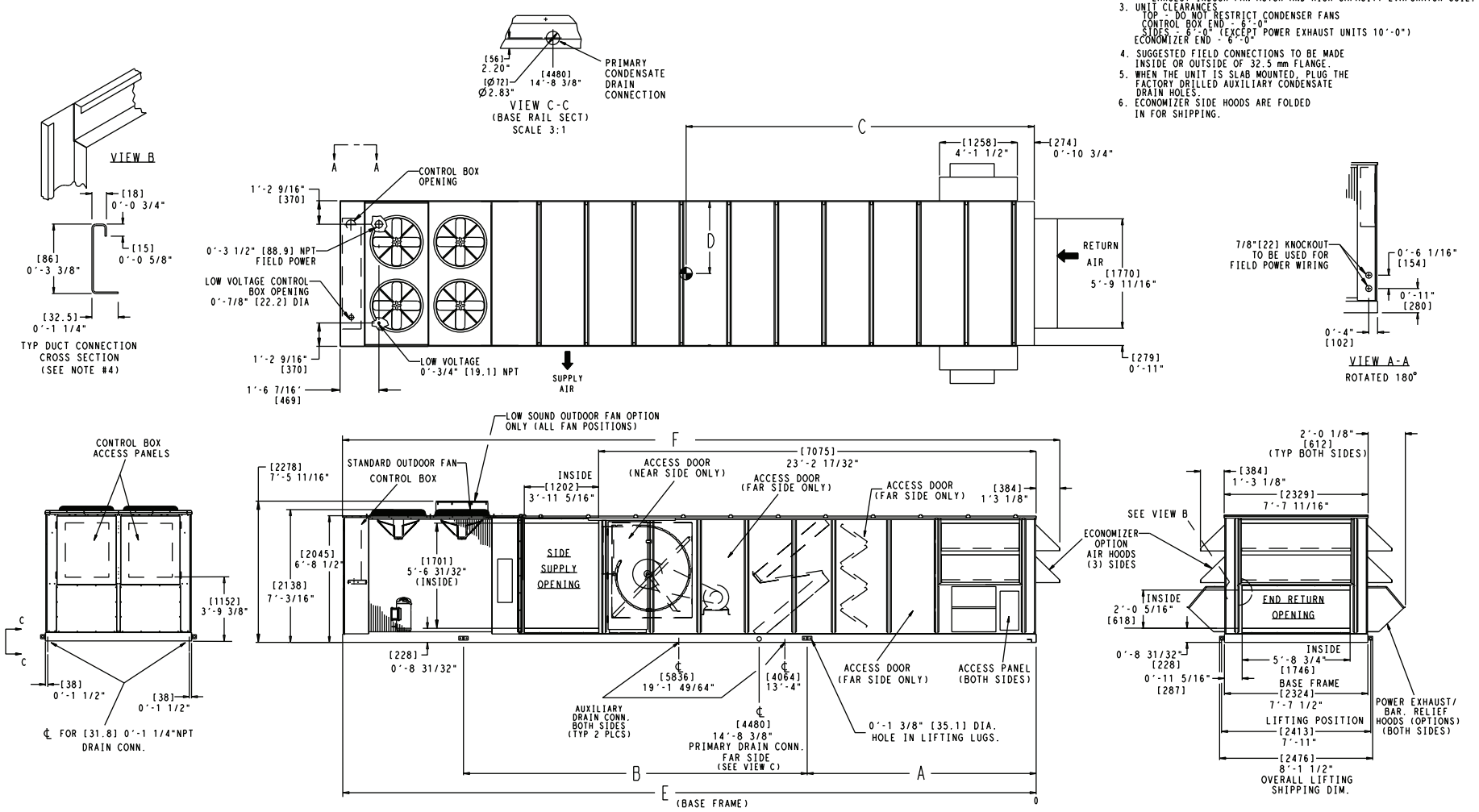

Fig. 17 — Base Unit Dimensional Drawing — 50P4,P5,P8,P9055,060 (Standard Chassis Unit Shown)

UNIT SIZE	WEIGHT LBS.	WEIGHT KGS.
070	8625	3912

NOTES:
1. DIMENSIONS IN [ ] ARE IN MILLIMETERS.
2. ⊕ UNIT WEIGHT AND CENTER OF GRAVITY INCLUDES ECONOMIZER, LARGEST INDOOR FAN MOTOR AND HIGH CAPACITY EVAPORATOR COIL.
3. UNIT CLEARANCES
   TOP - DO NOT RESTRICT CONDENSER FANS
   CONTROL BOX END - 6'-0"
   SIDES - 6'-0"
   ECONOMIZER END - 6'-0"(EXCEPT POWER EXHAUST UNITS 10'-0")
   FOR SMALLER SERVICE AND OPERATIONAL CLEARANCES, CONTACT CARRIER APPLICATION ENGINEERING DEPARTMENT.'
4. DOWNSHOT DUCTS DESIGNED TO BE ATTACHED TO ACCESSORY ROOF CURB. IF UNIT IS MOUNTED ON DUNNAGE,IT IS RECOMMENDED THE DUCTS BE SUPPORTED BY CROSS BRACES AS DONE ON THE ACCESSORY ROOF CURB.
5. WHEN THE UNIT IS SLAB MOUNTED, PLUG THE FACTORY DRILLED AUXILIARY CONDENSATE DRAIN HOLES.
6. ECONOMIZER SIDE HOODS ARE FOLDED INSIDE UNIT FOR SHIPPING

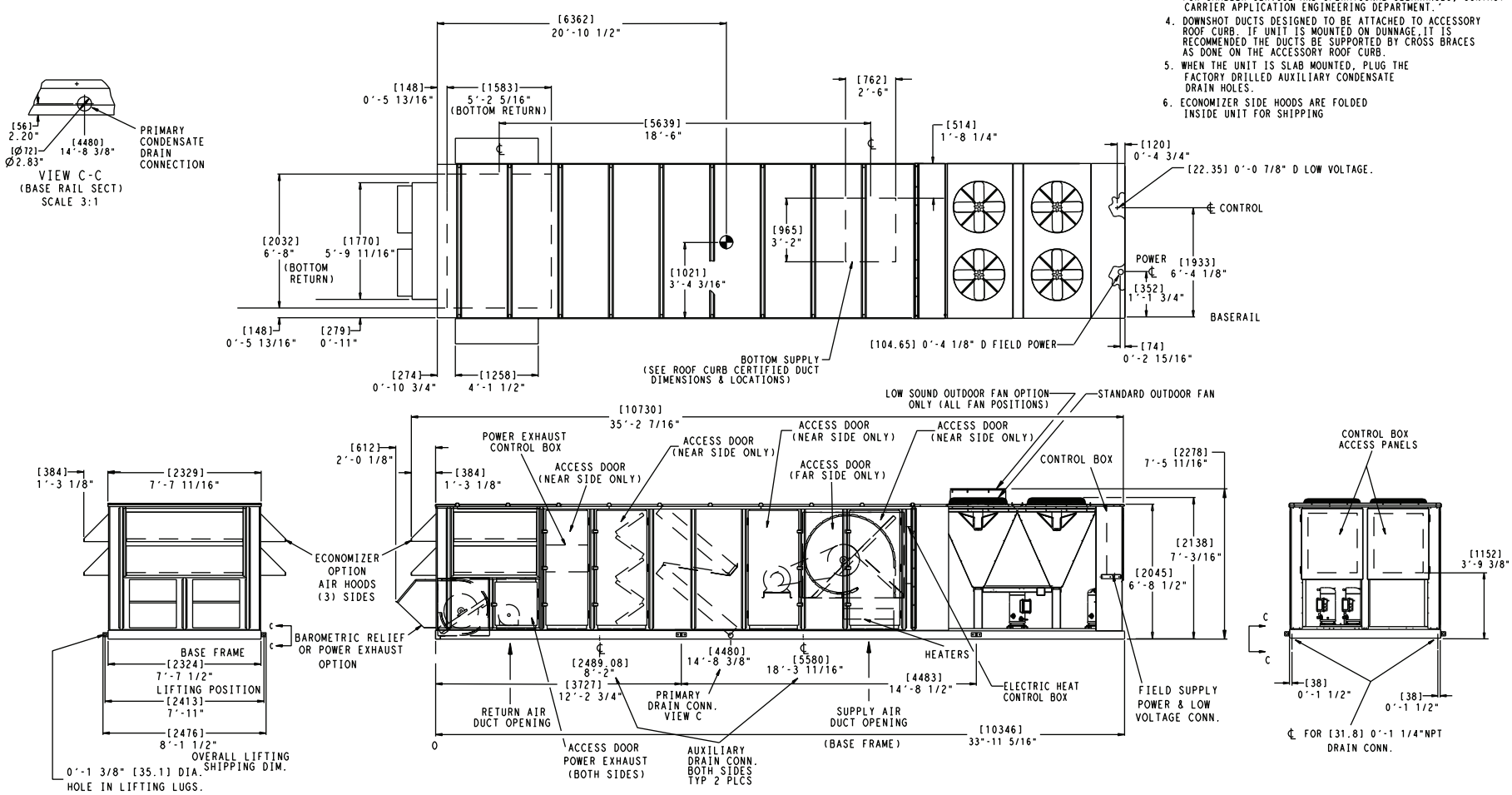

Fig. 18 — Base Unit Dimensional Drawing — 50P2,P3,P6,P7070 (Standard Chassis Unit Shown)

UNIT SIZE	WEIGHT LBS.	WEIGHT KGS.
070	9175	4162

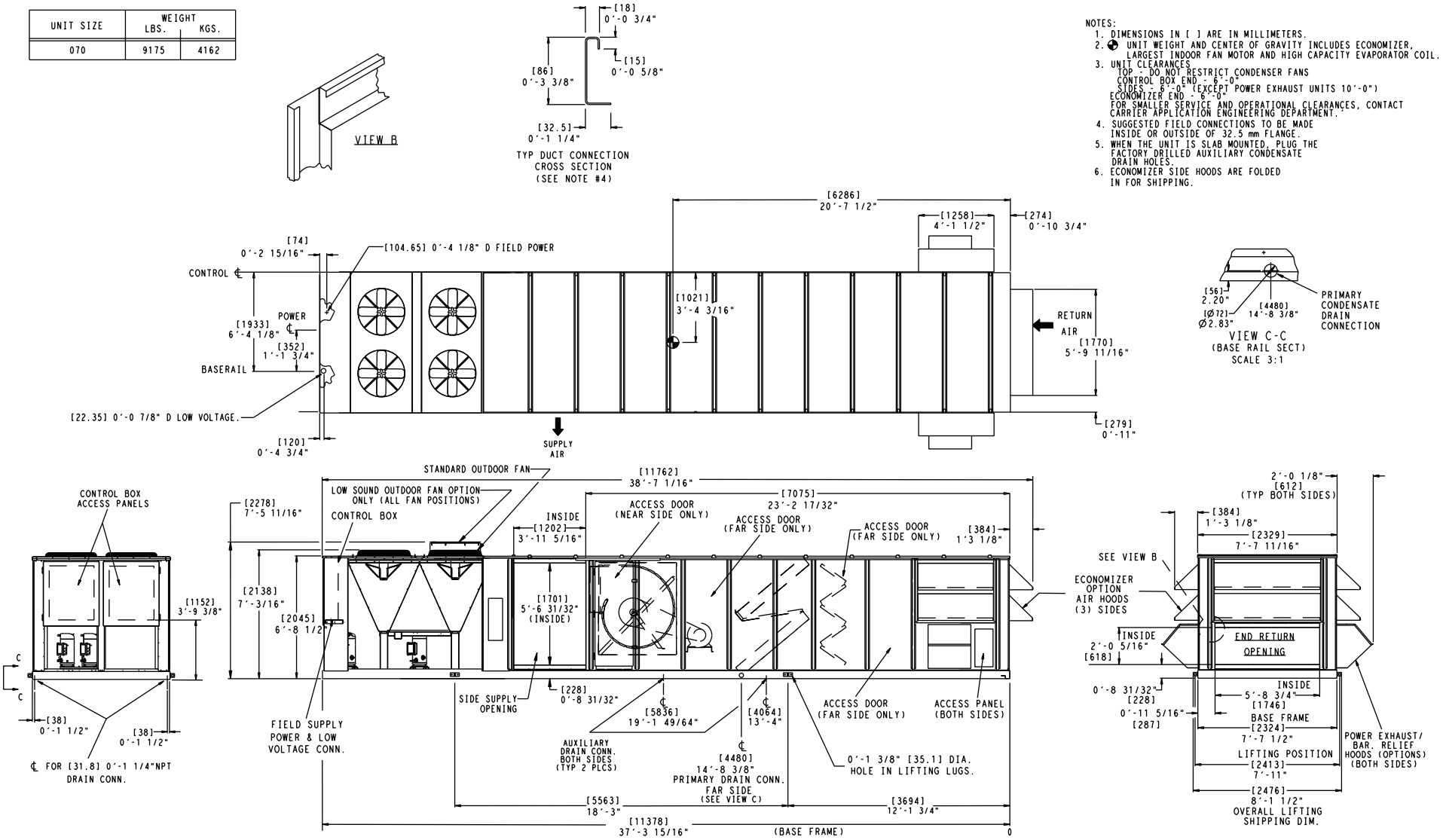

Fig. 19 — Base Unit Dimensional Drawing — 50P4,P5,P8,P9070 (Standard Chassis Unit Shown)

UNIT SIZE	WEIGHT LBS.	WEIGHT KGS.	A MM	A FT.IN.	B MM	B FT.IN.	C MM	C FT.IN.	D MM	D FT.IN.	E MM	E FT.IN.	F MM	F FT.IN.
075	13099	5942	3833	11′-7 1/2"	7927	21′-3 5/8"	7293	23′-11 1/8"	1021	3′-4 3/16"	13380	43′-10 1/4"	13970	45′-10"
090	13697	6213	3833	11′-7 1/2"	7927	21′-3 5/8"	7496	24′-7 1/8"	1054	3′-5 1/2"	14557	47′-9 1/8"	15147	49′-8 5/16"
100	13719	6223	3833	11′-7 1/2"	7927	21′-3 5/8"	7478	24′-6 3/8"	1054	3′-5 1/2"	14557	47′-9 1/8"	15147	49′-8 5/16"

NOTES:
1. DIMENSIONS IN [ ] ARE IN MILLIMETERS.
2. ⊕ UNIT WEIGHT AND CENTER OF GRAVITY INCLUDES ECONOMIZER, LARGEST INDOOR FAN MOTOR, HIGH CAPACITY EVAPORATOR COIL AND LARGEST POWER EXHAUST MOTOR.
3. UNIT CLEARANCES
   TOP - DO NOT RESTRICT CONDENSER FANS
   CONTROL BOX END - 6′-0"
   SIDES - 6′-0" (EXCEPT POWER EXHAUST UNITS 10′-0")
4. SUGGESTED FIELD CONNECTIONS TO BE MADE INSIDE OR OUTSIDE OF 32.5 mm FLANGE.
5. WHEN THE UNIT IS SLAB MOUNTED, PLUG THE FACTORY DRILLED AUXILIARY CONDENSATE DRAIN HOLES.
6. ECONOMIZER SIDE HOODS ARE FOLDED IN FOR SHIPPING.

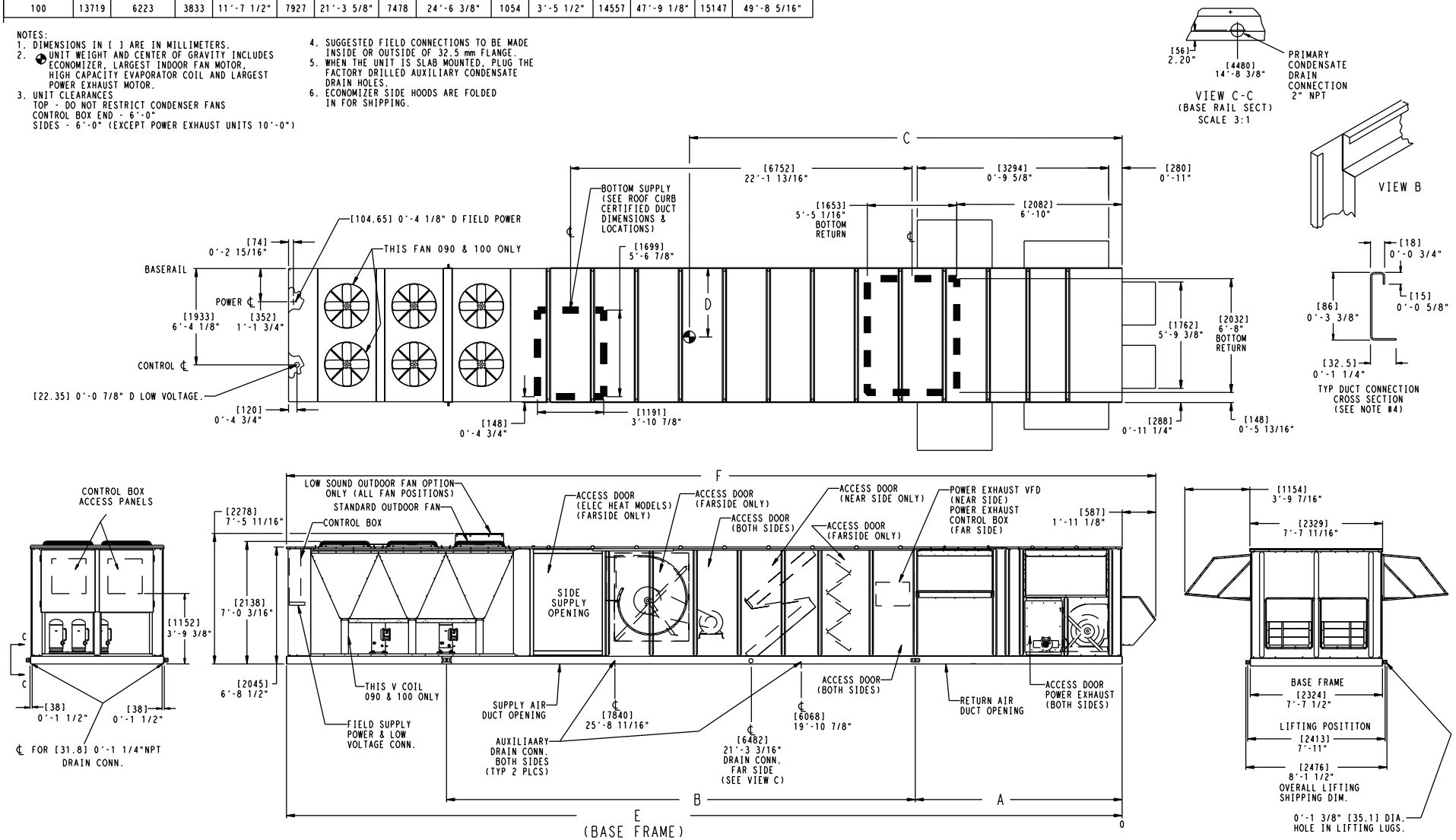

Fig. 20 — Base Unit Dimensional Drawing — 50P2,P3,P6,P7075-100 (Standard Chassis Unit with Optional High-Capacity Power Exhaust Shown)

UNIT SIZE	WEIGHT LBS.	WEIGHT KGS.	A MM	A FT.IN.	B MM	B FT.IN.	C MM	C FT.IN.	D MM	D FT.IN.	E MM	E FT.IN.	F MM	F FT.IN.
075	11921	5407	3543	11′-7 1/2"	6494	21′-3 5/8"	5590	18′-4 1/16"	1021	3′-4 3/16"	11378	37′-3 5/16"	11762	38′-7 1/16"
090	12521	5679	3543	11′-7 1/2"	6494	21′-3 5/8"	5800	19′-0 5/16"	1054	3′-5 1/2"	12555	41′-2 5/16"	12939	42′-5 7/16"
100	12541	5688	3543	11′-7 1/2"	6494	21′-3 5/8"	5786	18′-11 13/16"	1054	3′-5 1/2"	12555	41′-2 5/16"	12939	42′-5 7/16"

NOTES:
1. DIMENSIONS IN [ ] ARE IN MILLIMETERS.
2. ⊕ UNIT WEIGHT AND CENTER OF GRAVITY INCLUDES ECONOMIZER, LARGEST INDOOR FAN MOTOR, HIGH CAPACITY EVAPORATOR COIL AND LARGEST POWER EXHAUST MOTOR.
3. UNIT CLEARANCES
   TOP - DO NOT RESTRICT CONDENSER FANS
   CONTROL BOX END - 6′-0"
   SIDES - 6′-0"
   ECONOMIZER END - 6′-0" (EXCEPT POWER EXHAUST UNITS 10′-0")
   FOR SMALLER SERVICE AND OPERATIONAL CLEARANCES, CONTACT CARRIER APPLICATION ENGINEERING DEPARTMENT.′
4. SUGGESTED FIELD CONNECTIONS TO BE MADE INSIDE OR OUTSIDE OF 32.5 mm FLANGE.
5. WHEN THE UNIT IS SLAB MOUNTED, PLUG THE FACTORY DRILLED AUXILIARY CONDENSATE DRAIN HOLES.
6. ECONOMIZER SIDE HOODS ARE FOLDED IN FOR SHIPPING.

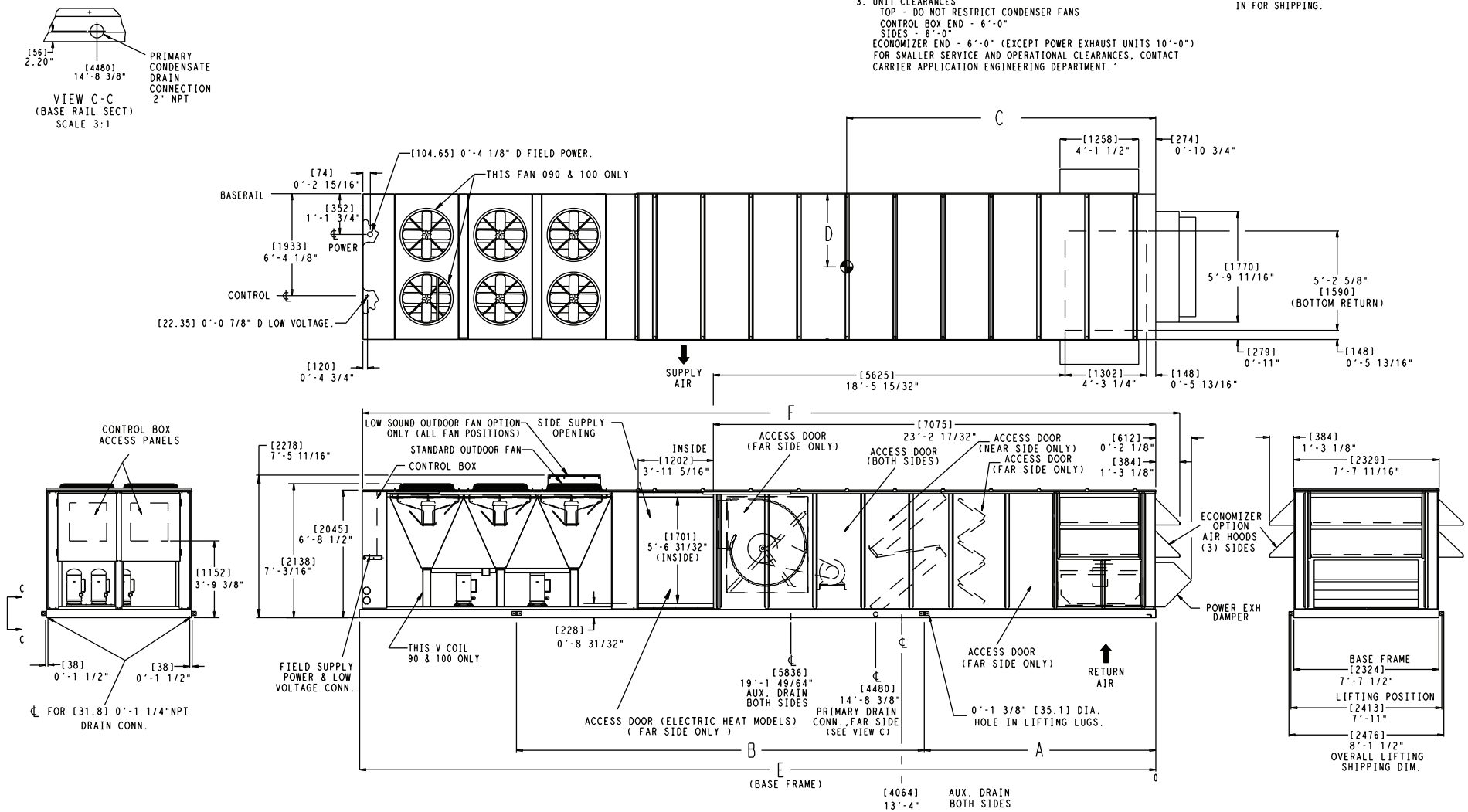

Fig. 21 — Base Unit Dimensional Drawing — 50P4,P5,P8,P9075-100 (Standard Chassis Unit with Optional Return Fan Shown)

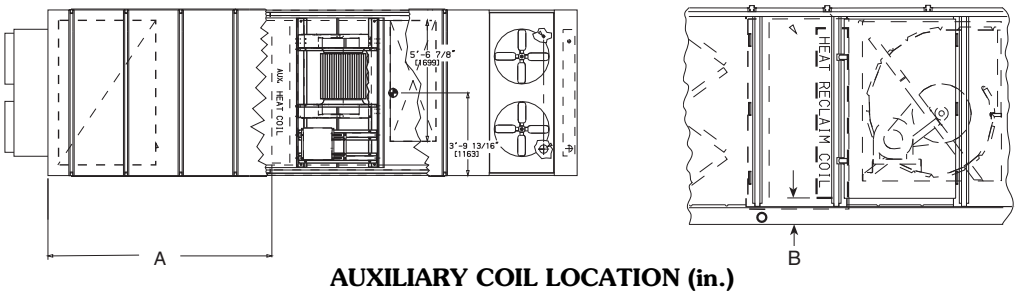

AUXILIARY COIL LOCATION (in.)

UNIT SIZES	DISTANCE A	HEIGHT B
030,035	123.0	6.6
040,050	156.8	6.6
055-070	200.4	6.6
075-100	200.4	6.6
075-100 with High Capacity Power Exhaust	279.2	6.6

Fig. 22 — Units with Optional Extended Chassis — Location of Coil Tracks

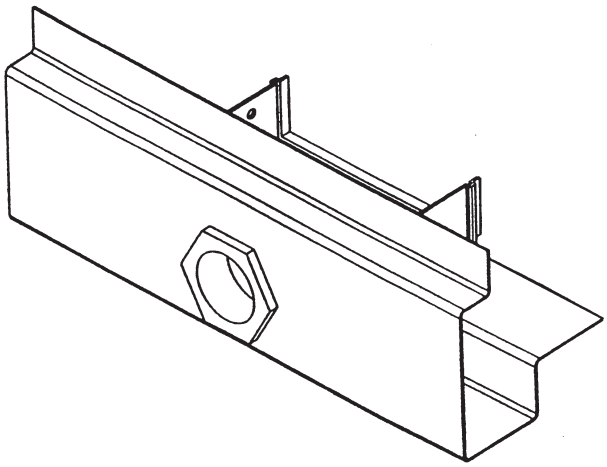

Fig. 23 — Primary Drain Connection

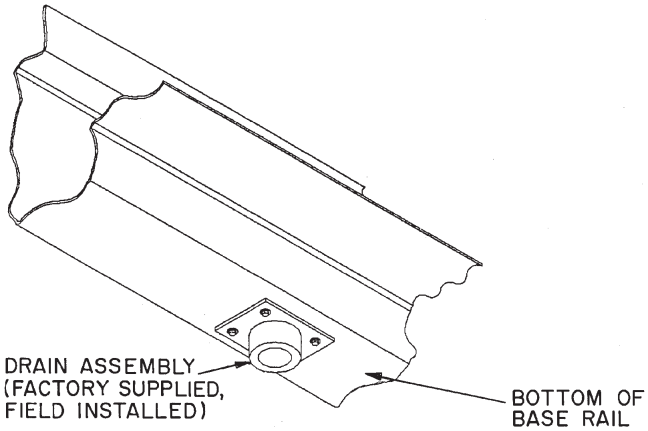

Fig. 25 — Secondary Condensate Drain Location (Curb Mount)

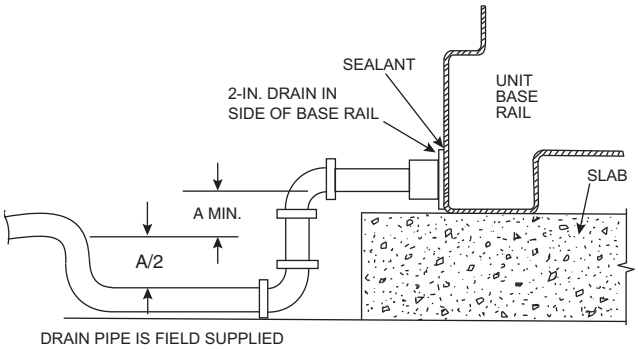

A = 4-in. (102 mm) min — Sizes 030-070
7-in. (178 mm) min — Sizes 075-100

Fig. 24 — Primary Condensate Drain Piping Details (Slab and Curb Mounted) and Slab-Mounted Secondary Condensate Drain Piping Details

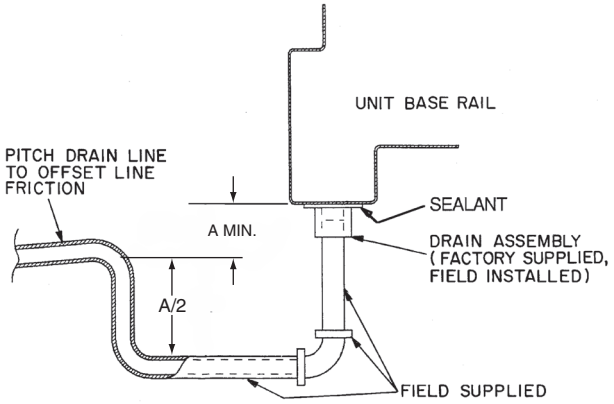

A = 4-in. (102 mm) min — sizes 030-070
7-in. (178 mm) min — sizes 075-100

Fig. 26 — Curb-Mounted Secondary Condensate Drain Pipe Details

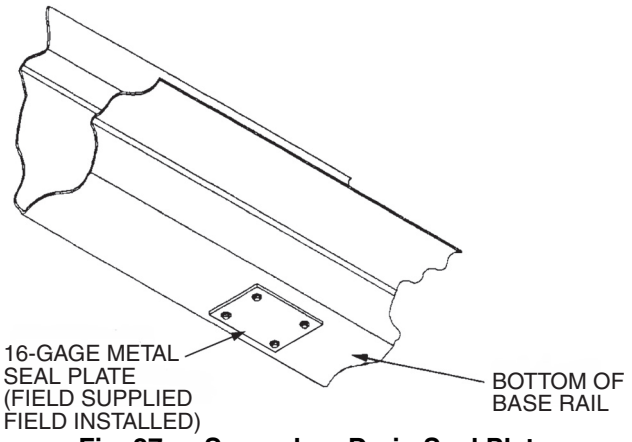

Fig. 27 — Secondary Drain Seal Plate Location (Slab Mount)

Step 9 — Install Outdoor Hoods[1]

UNIT SIZES 030-050

25% Outdoor-Air Hoods (Units without Economizer Option) (Fig. 28)

1. Outdoor-air hoods are shipped bolted to the unit in a shipping position. Remove the 6 screws holding each 25% outdoor-air hood shipping cover in place.
2. Remove the holddown screw from each upper corner of each hood.
3. Pivot hoods outward (2 hoods).
4. Install 17 screws around outside of each hood. (Screws are in the fastener package taped to the basepan inside the fan section.)
5. Apply a bead of RTV or similar sealant to corner of each hood at pivot points to prevent water leaks. See Fig. 29.

Economizer Hoods (Units with Economizer Option, Fig. 30 and 31)

1. Outdoor-air hoods are shipped bolted to the unit in a shipping position.
2. Remove the holddown screw from the lower corner of each hood.
3. Pivot hoods out and upward (2 hoods).
4. Apply seal strip to upper horizontal flange of the hood top extensions. Apply seal strip to vertical flange of hood sides. (Hood top extensions, sides, screws, and seal strip are shipped inside the fan section of the unit.)
5. Install hood top extensions on bottom side of hood using 6 screws on each hood. Install hood sides using 10 screws on each side (7 along the top, 3 to fasten to unit side wall).
6. Apply a bead of RTV or similar sealant to corners of economizer hoods at pivot points to prevent water leaks. See Fig. 29.

UNIT SIZES 055-100

25% Outdoor-Air Hoods (Fig. 32)

The outdoor-air hoods are factory installed on the 055-100 units.

Economizer Hoods (Units with Economizer Option) (Fig. 33-35)

1. Outdoor-air hoods are shipped bolted to the unit in a shipping position.
2. Remove the holddown screw from the lower corner of each economizer hood.
3. Pivot hoods out and upward (4 hoods).
4. Apply seal strip to upper horizontal flange of the hood top extensions. Apply seal strip to vertical flange of hood sides. (Hood top extensions, sides, screws, and seal strip are shipped inside the fan section of the unit.)
5. Install hood top extensions on bottom side of hood top using 6 screws for each hood. Install hood sides using 10 screws for each side (7 along the top, 3 to fasten to unit side wall).
6. Apply a bead of RTV or similar sealant to corners of economizer hoods at pivot points to prevent water leaks. See Fig. 29.

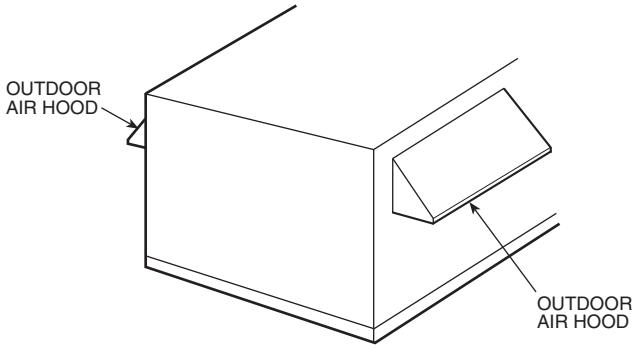

Fig. 28 — Outdoor-Air Hood Installation (Sizes 030-050)

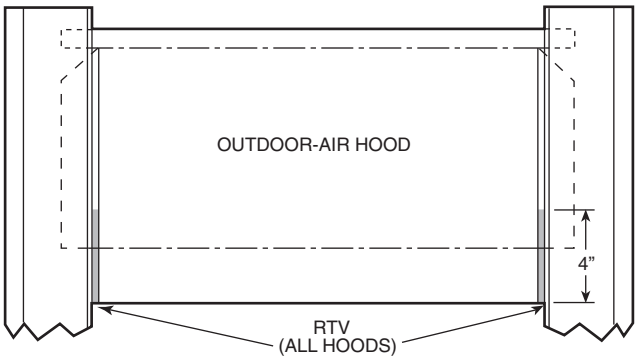

Fig. 29 — Outdoor-Air and Economizer Hood

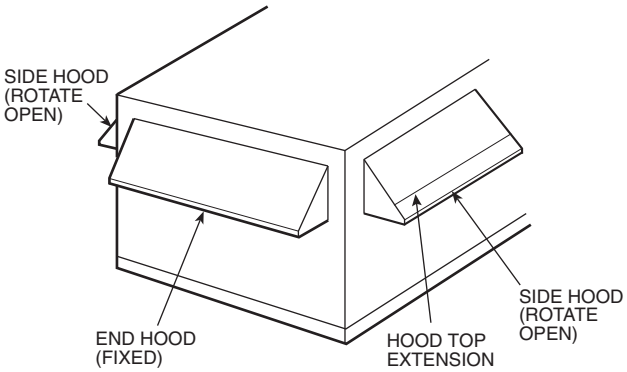

Fig. 30 — Economizer Outdoor-Air Hood Installation (Sizes 030-050)

1. For Greenspeed option units, (50P6,P7,P8,P9), secure the OAT sensor in the outdoor-air stream to measure the ambient air temperature.

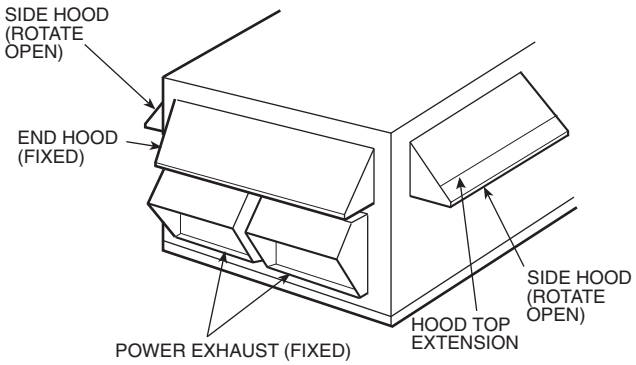

Fig. 31 — Economizer with Power Exhaust Outdoor-Air Hood Installation (Sizes 030-050)

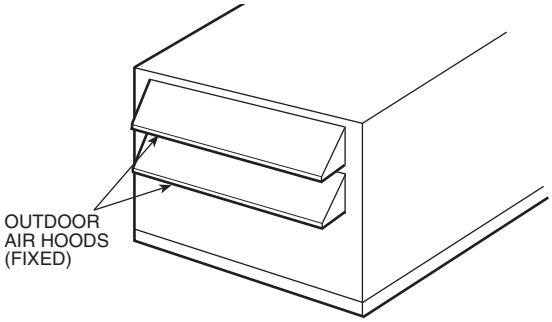

Fig. 32 — 25% Outdoor-Air Hood Location (Sizes 055-100)

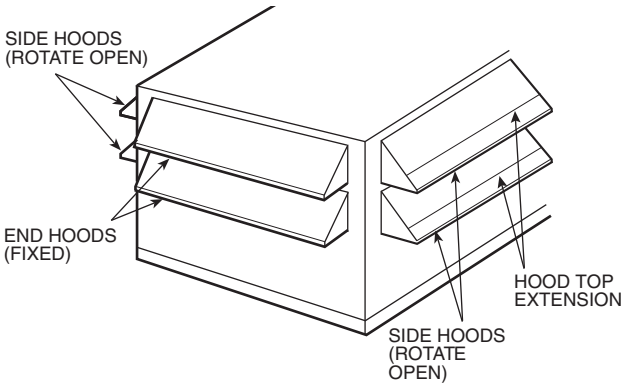

Fig. 33 — Economizer Outdoor-Air Hood Installation (Sizes 055-100)

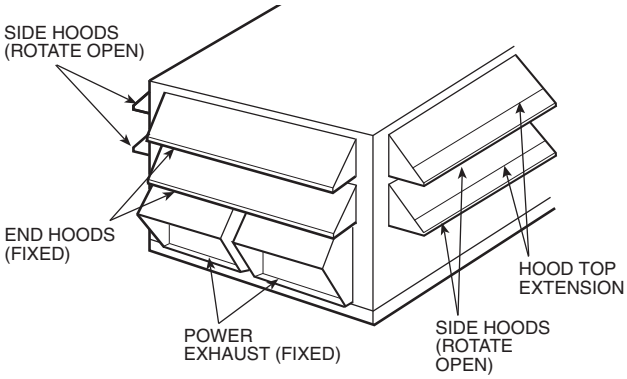

Fig. 34 — Economizer with Power Exhaust Outdoor-Air Hood Installation (Sizes 055-100)

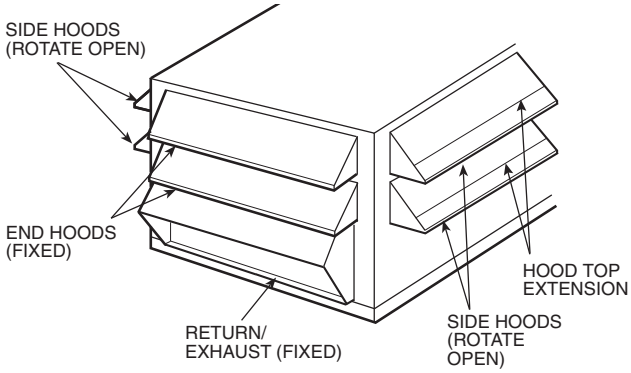

Fig. 35 — Economizer with Return/Exhaust Fan Outdoor-Air Hood Installation (Units with Optional Return Fan)

Step 10 — Install Economizer Hoods (Units with Optional High-Capacity Power Exhaust)

The economizer uses a total of 4 outdoor intake hoods, 2 on each side of the unit. See Fig. 36. Two small hoods (one per side) are factory-installed and are pivoted inside the unit chassis for shipment. Two large hoods are shipped in packages located inside the unit. The large hoods (1 on each side) require field assembly and mounting.

INSTALL SMALL HOODS

To install the small economizer hoods, perform the following procedure:

1. Remove the 10 screws holding each of the small economizer hood shipping covers in place.
2. Pivot hoods outward (2 hoods).
3. Apply seal strip to vertical flange of hood sides.
4. Install 15 screws (4 each side, 7 across top) around the outside of each hood. Screws are in the fastener package taped to the basepan inside the fan section.
5. Apply a bead of RTV or similar sealant to corner of economizer hood at pivot point to prevent water leaks. (See Fig. 29.)

INSTALL LARGE HOODS

Large hoods are shipped disassembled in the economizer section of the unit behind the large economizer hood shipping cover. See Fig. 37 for assembly details for large economizer hoods. To install the large economizer hoods, perform the following procedure:

1. Remove the 17 screws holding each of the large economizer hood shipping covers in place.
2. Remove the packages containing the disassembled large economizer hoods (total of 2 packages). Each package contains the following (see Fig. 37 for Item numbers): left hood side (Item 1), right hood side (Item 2), hood top (Item 3), hood front (Item 4), top filter flange (Item 5), 4 side filter flanges (Item 6), bottom support (Item 7), front support (Item 8), 6 filters (Item 9), 9 filter clips (Item 10), seal strip, and fasteners.
3. Place seal strip on backside of bottom support (Item 7) along entire length of support, covering 6 clearance holes.
4. Attach bottom support piece (Item 7) to unit. Be sure seal strip is between bottom support and panel on unit.
5. Place seal strip on $^3/_4$-in. flange on both the left and right hood sides (Items 1 and 2).
6. Attach the side filter flanges (Item 6) to the left and right hood sides (Items 1 and 2), 2 on each hood side.

7. Attach left and right hood sides (Items 1 and 2) to unit. Be sure seal strip is between hood side and unit.
8. Place seal strip on 3/4-in. flange on hood top (Item 3).
9. Attach top filter flange (Item 5) to hood top (Item 3).
10. Attach top hood to unit and to hood sides. Be sure seal strip is between hood top and unit.
11. Attach front support (Item 8) between left and right hood sides.
12. Place seal strip on all filter flanges.
13. Attach filter clips (Item 10) to front and bottom supports (Items 7 and 8).
14. Install filters (Item 9). Filters are held in place with filter clips.
15. Attach hood front (Item 4) to hood top and sides.
16. Apply RTV or similar sealant to 6 places shown in Fig. 37.

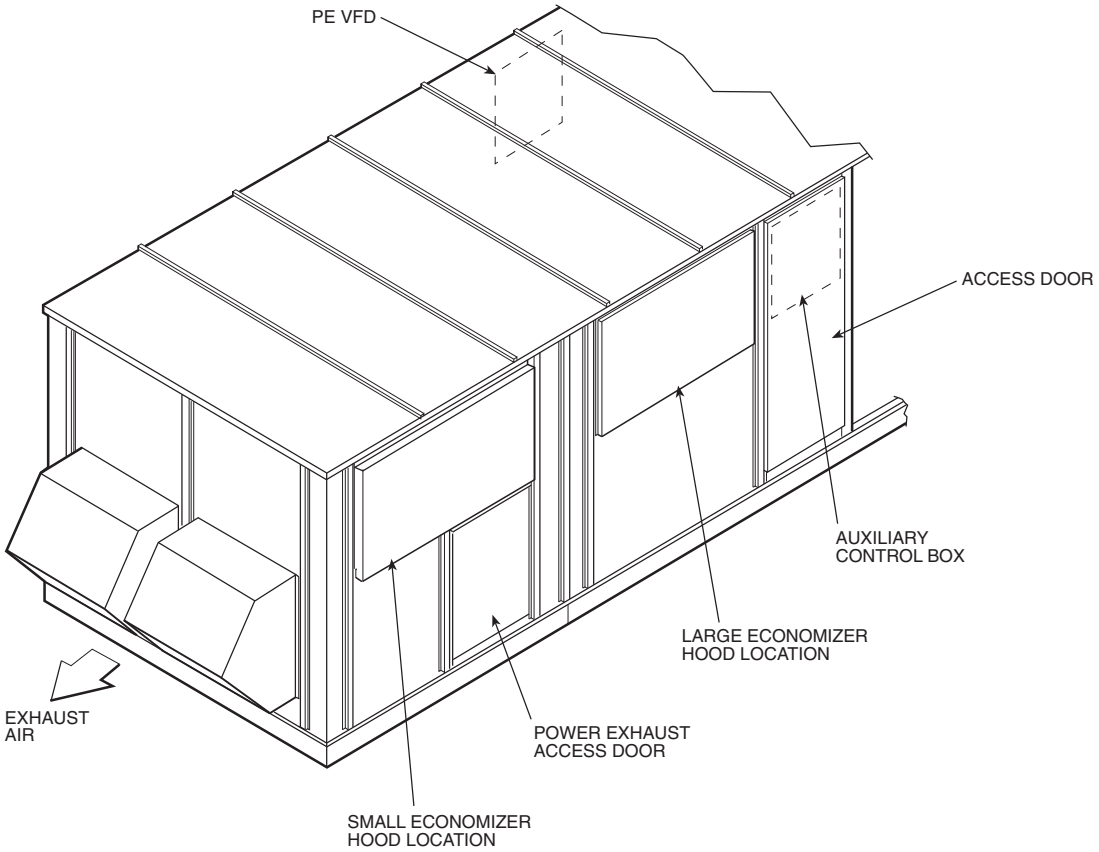

LEGEND

PE VFD — Power Exhaust Variable Frequency Drive

Fig. 36 — Economizer Hood Location — Units with High-Capacity Power Exhaust

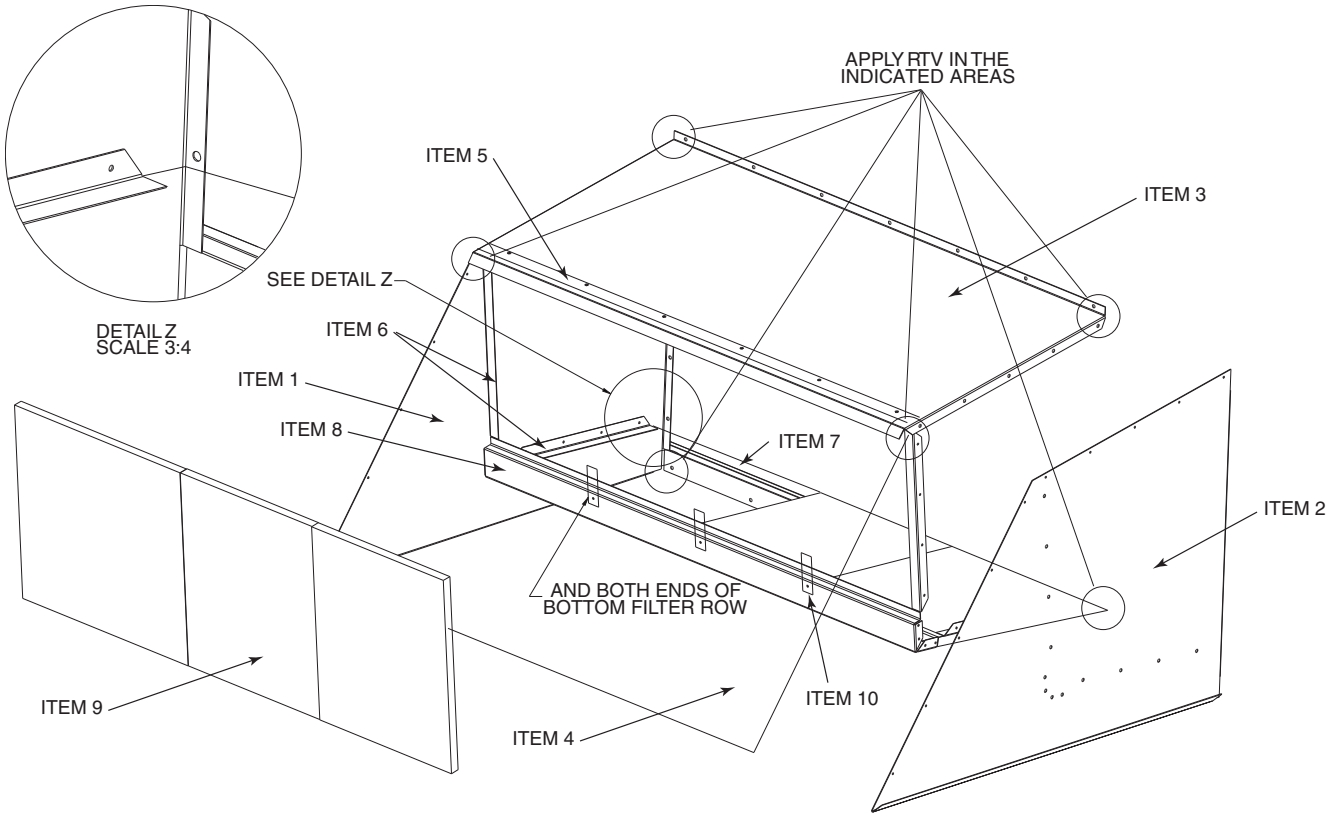

Fig. 37 — Large Economizer Hood Assembly

Step 11 — Route Field Wiring

UNIT SIZES 030-060

Field wiring can be brought into the unit through the basepan and roof curb or through the corner post in the side of the unit next to the control box.

A $3^1/_2$-in. FPT coupling for field power and a $^3/_4$-in. FPT coupling for 24 v control wiring are provided in the basepan. There are two $^7/_8$-in. pilot holes in the corner post as shown on the certified drawings. Use these holes as pilot holes for making the hole for field-supplied conduit in the corner post for field power wiring.

⚠ CAUTION

Use care when drilling near condenser coil. Damage to unit could result.

If field power wiring is brought through the roof curb, route wiring out through one of the holes to the field-supplied disconnect and then back into the unit through the other hole. See Fig. 38 and 39 for recommended disconnect location.

If power wiring is brought through the side of the unit, route wiring from field-supplied disconnect through top hole into unit.

If control wiring is to be brought in through the side of the unit, a $^7/_8$-in. diameter hole must be drilled in the corner post next to the control box.

UNIT SIZES 070-100

Field wiring is brought into the unit through the bottom of the control box. Wiring can be brought through the roof curb through field-supplied watertight connections. See Fig. 40.

A $4^5/_{32}$-in. hole for field power wiring and a $^7/_8$-in. hole for 24 v control wiring are provided in the bottom of the control box. Field-supplied couplings must be used when routing wiring into the control box.

See Fig. 40 for recommended disconnect location.

Step 12 — Make Field Electrical Connections

IMPORTANT: The 50P3,P5 (variable air volume) units generate, use, and can radiate radio frequency energy. If units are not installed and used in accordance with these instructions, they may cause radio interference. They have been tested and found to comply with limits of a Class A computing device as defined by FCC (Federal Communications Commission) regulations, Subpart J of Part 15, which are designed to provide reasonable protection against such interference when operated in a commercial environment.

POWER WIRING

Units are factory wired for the voltage shown on the unit nameplate. The main terminal block is suitable for use with aluminum or copper wires. Maximum wire size is 3/0 AWG (American Wire Gage).

Units without Factory-Installed Disconnect

When installing units, provide a disconnect per NEC (National Electrical Code) of adequate size (MOCP [maximum overcurrent protection] of unit is on the informative plate). All field wiring must comply with NEC and all local codes. Size wire based on MCA (minimum circuit amps) on the unit informative plate. See Fig. 41 for power wiring connections to the unit power terminal block and equipment ground. Maximum wire size is two 500 MCM conductors per pole.

Units with Factory-Installed Disconnect

The factory-installed disconnect is an interlocking, door-type. The disconnect handle locks the door when it is in the ON position. The disconnect handle must be in the OFF position to open the control box door. The disconnect is located in the unit control box behind the control box door. See Fig. 42.

All field wiring must comply with NEC and all local codes. Wire must be sized based on MCA (minimum circuit amps) on the unit informative plate. See Fig. 43 for power wiring connections to the unit disconnect and equipment ground.

DISCONNECT SIZE	MAXIMUM WIRE SIZE (MCM)
250 Amps	300
400 Amps	600
600 Amps	600*

*Two conductors per pole.

Operating Voltage

Operating voltage to the compressor must be within the voltage range indicated on the unit nameplate. Voltages between phases must be balanced within 2%, and the current must be balanced within 10%. See Tables 13-35 for unit electrical data.

Use the following formula to determine the percent voltage imbalance.

% Voltage Imbalance

$$= 100 \times \frac{\text{max voltage deviation from average voltage}}{\text{average voltage}}$$

Example: Supply voltage is 460-3-60.

AB = 452 v

BC = 464 v

AC = 455 v

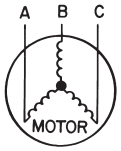

$$\text{Average Voltage} = \frac{452 + 464 + 455}{3}$$

$$= \frac{1371}{3}$$

$$= 457$$

Determine maximum deviation from average voltage:

(AB) 457 – 452 = 5 v

(BC) 464 – 457 = 7 v

(AC) 457 – 455 = 2 v

Maximum deviation is 7 v.

Determine percent voltage imbalance:

$$\text{\% Voltage Imbalance} = 100 \times \frac{7}{457}$$

$$= 1.53\%$$

This amount of phase imbalance is satisfactory as it is below the maximum allowable 2%.

IMPORTANT: If the supply voltage phase imbalance is more than 2%, contact local utility immediately.

Unit failure as a result of operation on improper line voltage or excessive phase imbalance constitutes abuse and may cause damage to electrical components.

(Text continued on page 169.)

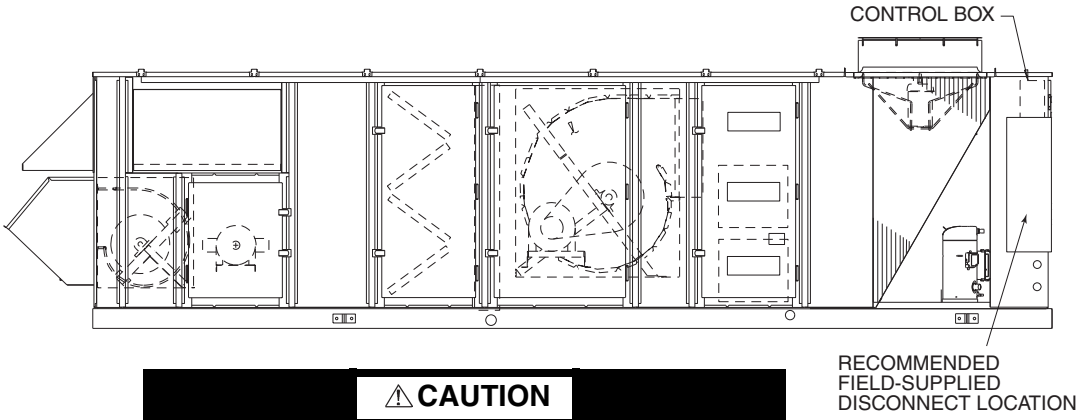

⚠ CAUTION

Use care when drilling into corner post to avoid damage to condenser coil.

Fig. 38 — Disconnect Location — Size 030 and 035 Units

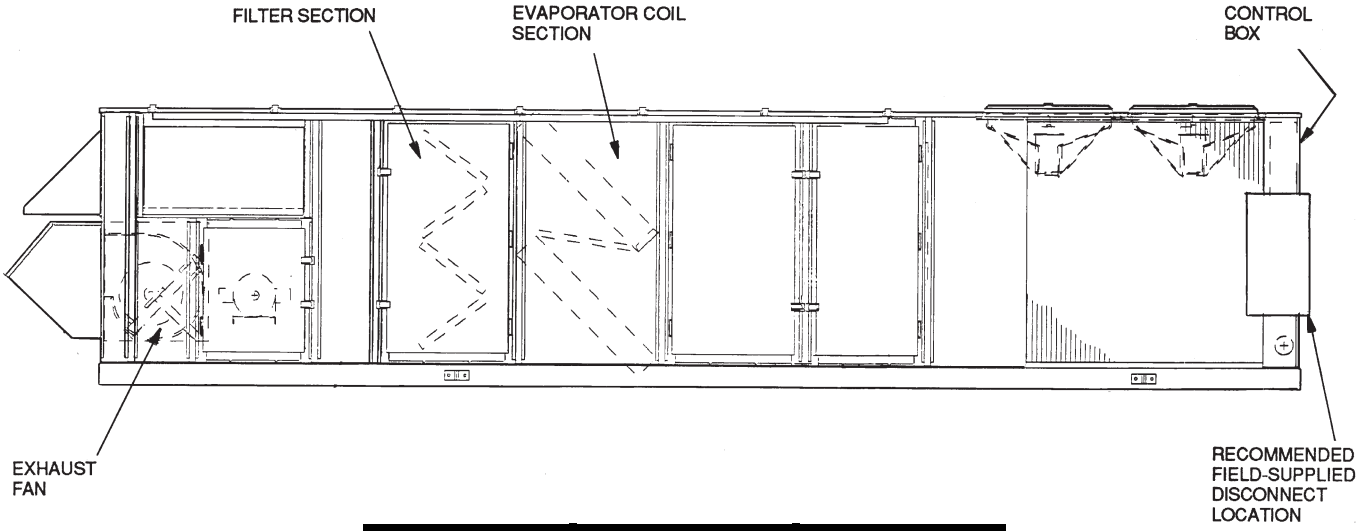

⚠ CAUTION

Use care when drilling into corner post to avoid damage to condenser coil.

Fig. 39 — Disconnect Location — Size 040-060 Units

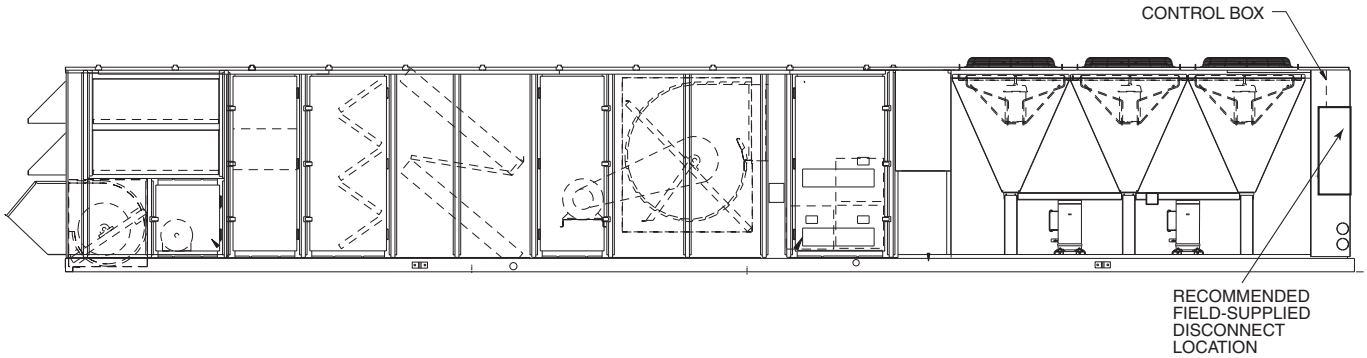

⚠ CAUTION

Use care when drilling into corner post to avoid damage to condenser coil.

Fig. 40 — Disconnect Location — Size 070-100 Units

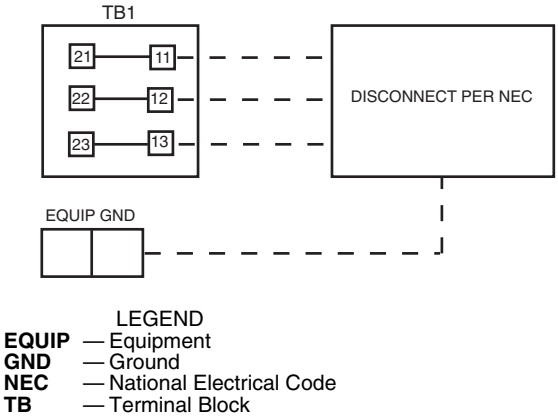

Fig. 41 — Field Power Wiring Connections

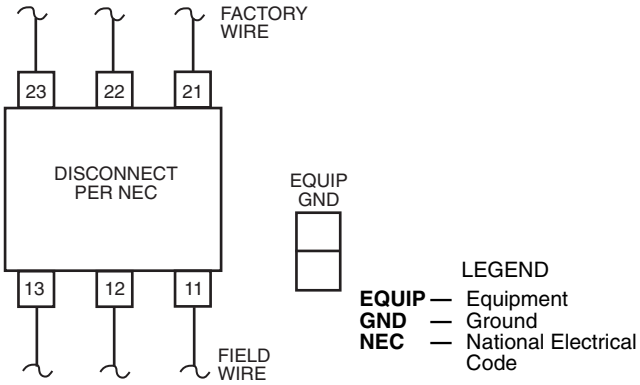

Fig. 43 — Field Power Wiring Connections for Factory-Installed Disconnect

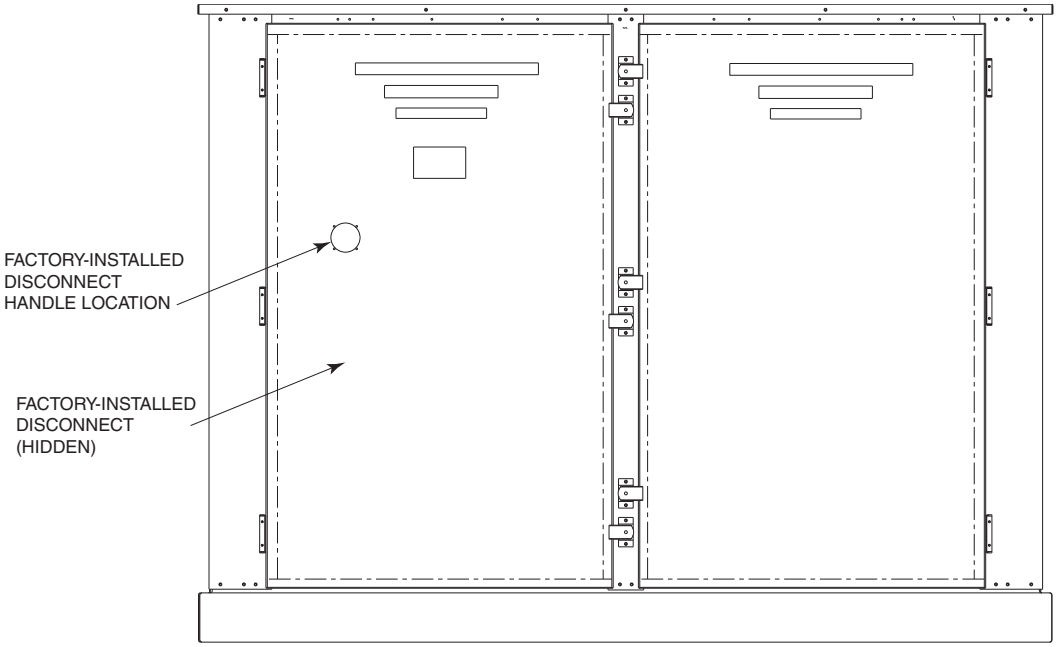

Fig. 42 — Factory-Installed Disconnect Location (End of Unit Shown)

Table 13 — Electrical Data — 50P 030 Units

208/230-3-60 (V-Ph-Hz)

VOLTAGE RANGE		COMPRESSOR						CONDENSER FAN MOTOR		EVAPORATOR FAN MOTOR		POWER EXHAUST			OPTIONAL ELECTRIC HEAT		POWER SUPPLY	
		No. A1			No. B1													
Min	Max	Qty	RLA (ea)	LRA (ea)	Qty	RLA (ea)	LRA (ea)	Qty	FLA	Hp	FLA	Qty	Hp (ea)	FLA (ea)	FLA	kW	MCA	FUSE OR HACR BRKR*
187	253	1	51.3	300	1	51.3	300	2	6.6 (ea)	7 1/2	24.2 / 22.0	—	—	— / —	—	—	152.8/ 150.6	200/ 200
															78.9/ 90.0	36/ 36	152.8/ 150.6	200/ 200
															157.7/ 182.0	72/ 72	188.0/ 209.5	225/ 250
															236.6/ 273.0	108/ 108	266.9/ 300.5	300/ 350
												2	3	10.6 / 9.6	—	—	174.0/ 169.8	225/ 200
															78.9/ 90.0	36/ 36	174.0/ 169.8	225/ 200
															157.7/ 182.0	72/ 72	214.5/ 233.5	250/ 250
															236.6/ 273.0	108/ 108	293.4/ 324.5	300/ 350
													5	16.7 / 15.2	—	—	186.2/ 181.0	225/ 225
															78.9/ 90.0	36/ 36	186.2/ 181.0	225/ 225
															157.7/ 182.0	72/ 72	229.7/ 247.5	250/ 250
															236.6/ 273.0	108/ 108	308.6/ 338.5	350/ 350
													7.5	24.2 / 22.0	—	—	201.2/ 194.6	250/ 225
															78.9/ 90.0	36/ 36	201.2/ 195.0	250/ 225
															157.7/ 182.0	72/ 72	248.5/ 264.5	250/ 300
															236.6/ 273.0	108/ 108	327.4/ 355.5	350/ 400
													10	30.8 / 28.0	—	—	214.4/ 206.6	250/ 250
															78.9/ 90.0	36/ 36	214.4/ 210.0	250/ 250
															157.7/ 182.0	72/ 72	265.0/ 279.5	300/ 300
															236.6/ 273.0	108/ 108	343.9/ 370.5	350/ 400
										10	30.8/28.0	—	—	— / —	—	—	159.4/ 156.6	200/ 200
															78.9/ 90.0	36/ 36	159.4/ 156.6	200/ 200
															157.7/ 182.0	72/ 72	196.2/ 217.0	250/ 250
															236.6/ 273.0	108/ 108	275.1/ 308.0	300/ 350
												2	3	10.6 / 9.6	—	—	180.6/ 175.8	225/ 225
															78.9/ 90.0	36/ 36	180.6/ 175.8	225/ 225
															157.7/ 182.0	72/ 72	222.7/ 241.0	250/ 250
															236.6/ 273.0	108/ 108	301.6/ 332.0	350/ 350
													5	16.7 / 15.2	—	—	192.8/ 187.0	225/ 225
															78.9/ 90.0	36/ 36	192.8/ 187.0	225/ 225
															157.7/ 182.0	72/ 72	238.0/ 255.0	250/ 300
															236.6/ 273.0	108/ 108	316.9/ 346.0	350/ 350
													7.5	24.2 / 22.0	—	—	207.8/ 200.6	250/ 250
															78.9/ 90.0	36/ 36	207.8/ 202.5	250/ 250
															157.7/ 182.0	72/ 72	256.7/ 272.0	300/ 300
															236.6/ 273.0	108/ 108	335.6/ 363.0	350/ 400
													10	30.8 / 28.0	—	—	221.0/ 212.6	250/ 250
															78.9/ 90.0	36/ 36	221.0/ 217.5	250/ 250
															157.7/ 182.0	72/ 72	273.2/ 287.0	300/ 300
															236.6/ 273.0	108/ 108	352.1/ 378.0	400/ 400
										15	46.2/42.0	—	—	— / —	—	—	174.8/ 170.6	225/ 200
															78.9/ 90.0	36/ 36	174.8/ 170.6	225/ 200
															157.7/ 182.0	72/ 72	215.5/ 234.5	250/ 250
															236.6/ 273.0	108/ 108	294.4/ 325.5	300/ 350
												2	3	10.6 / 9.6	—	—	196.0/ 189.8	225/ 225
															78.9/ 90.0	36/ 36	196.0/ 189.8	225/ 225
															157.7/ 182.0	72/ 72	242.0/ 258.5	250/ 300
															236.6/ 273.0	108/ 108	320.9/ 349.5	350/ 350
													5	16.7 / 15.2	—	—	208.2/ 201.0	250/ 250
															78.9/ 90.0	36/ 36	208.2/ 203.0	250/ 250
															157.7/ 182.0	72/ 72	257.2/ 272.5	300/ 300
															236.6/ 273.0	108/ 108	336.1/ 363.5	350/ 400
													7.5	24.2 / 22.0	—	—	223.2/ 214.6	250/ 250
															78.9/ 90.0	36/ 36	223.2/ 220.0	250/ 250
															157.7/ 182.0	72/ 72	276.0/ 289.5	300/ 300
															236.6/ 273.0	108/ 108	354.9/ 380.5	400/ 400
													10	30.8 / 28.0	—	—	236.4/ 226.6	250/ 250
															78.9/ 90.0	36/ 36	236.4/ 235.0	250/ 250
															157.7/ 182.0	72/ 72	292.5/ 304.5	300/ 350
															236.6/ 273.0	108/ 108	371.4/ 395.5	400/ 400

See page 169 for legend and notes.

Table 13 — Electrical Data — 50P 030 Units (cont)

208/230-3-60 (V-Ph-Hz) (cont)

VOLTAGE RANGE		COMPRESSOR						CONDENSER FAN MOTOR		EVAPORATOR FAN MOTOR		POWER EXHAUST			OPTIONAL ELECTRIC HEAT		POWER SUPPLY	
		No. A1			No. B1													
Min	Max	Qty	RLA (ea)	LRA (ea)	Qty	RLA (ea)	LRA (ea)	Qty	FLA	Hp	FLA	Qty	Hp (ea)	FLA (ea)	FLA	kW	MCA	FUSE OR HACR BRKR*
187	253	1	51.3	300	1	51.3	300	2	6.6 (ea)	20	59.4 / 54.0	—	—	— / —	— 78.9/ 90.0 157.7/ 182.0 236.6/ 273.0	— 36/ 36 72/ 72 108/ 108	190.1/ 183.3 190.1/ 183.3 232.0/ 249.5 310.9/ 340.5	225/ 225 225/ 225 250/ 300 350/ 350
												2	3	10.6 / 9.6	— 78.9/ 90.0 157.7/ 182.0 236.6/ 273.0	— 36/ 36 72/ 72 108/ 108	211.3/ 202.5 211.3/ 204.0 258.5/ 273.5 337.4/ 364.5	250/ 250 250/ 250 300/ 300 350/ 400
													5	16.7 / 15.2	— 78.9/ 90.0 157.7/ 182.0 236.6/ 273.0	— 36/ 36 72/ 72 108/ 108	223.5/ 213.7 223.5/ 218.0 273.7/ 287.5 352.6/ 378.5	250/ 250 250/ 250 300/ 300 400/ 400
													7.5	24.2 / 22.0	— 78.9/ 90.0 157.7/ 182.0 236.6/ 273.0	— 36/ 36 72/ 72 108/ 108	238.5/ 227.3 238.5/ 235.0 292.5/ 304.5 371.4/ 395.5	250/ 250 250/ 250 300/ 350 400/ 400
													10	30.8 / 28.0	— 78.9/ 90.0 157.7/ 182.0 236.6/ 273.0	— 36/ 36 72/ 72 108/ 108	251.7/ 239.3 251.7/ 250.0 309.0/ 319.5 387.9/ 410.5	300/ 250 300/ 250 350/ 350 400/ 450
										25	74.8 / 68.0	—	—	— / —	— 78.9/ 90.0 157.7/ 182.0 236.6/ 273.0	— 36/ 36 72/ 72 108/ 108	209.3/ 200.8 209.3/ 200.8 251.2/ 267.0 330.1/ 358.0	250/ 250 250/ 250 300/ 300 400/ 400
												2	3	10.6 / 9.6	— 78.9/ 90.0 157.7/ 182.0 236.6/ 273.0	— 36/ 36 72/ 72 108/ 108	230.5/ 220.0 230.5/ 221.5 277.7/ 291.0 356.6/ 382.0	300/ 250 300/ 250 300/ 350 400/ 400
													5	16.7 / 15.2	— 78.9/ 90.0 157.7/ 182.0 236.6/ 273.0	— 36/ 36 72/ 72 108/ 108	242.7/ 231.2 242.7/ 235.5 293.0/ 305.0 371.9/ 396.0	300/ 250 300/ 250 350/ 350 400/ 450
													7.5	24.2 / 22.0	— 78.9/ 90.0 157.7/ 182.0 236.6/ 273.0	— 36/ 36 72/ 72 108/ 108	257.7/ 244.8 257.7/ 252.5 311.7/ 322.0 390.6/ 413.0	300/ 300 300/ 300 350/ 350 450/ 450
													10	30.8 / 28.0	— 78.9/ 90.0 157.7/ 182.0 236.6/ 273.0	— 36/ 36 72/ 72 108/ 108	270.9/ 256.8 270.9/ 267.5 328.2/ 337.0 407.1/ 428.0	300/ 300 300/ 300 350/ 350 450/ 450
										30	88.0 / 80.0	—	—	— / —	— 78.9/ 90.0 157.7/ 182.0 236.6/ 273.0	— 36/ 36 72/ 72 108/ 108	225.8/ 215.8 225.8/ 215.8 267.7/ 282.0 346.6/ 373.0	300/ 250 300/ 250 350/ 350 400/ 450
												2	3	10.6 / 9.6	— 78.9/ 90.0 157.7/ 182.0 236.6/ 273.0	— 36/ 36 72/ 72 108/ 108	247.0/ 235.0 247.0/ 236.5 294.2/ 306.0 373.1/ 397.0	300/ 300 300/ 300 350/ 350 450/ 450
													5	16.7 / 15.2	— 78.9/ 90.0 157.7/ 182.0 236.6/ 273.0	— 36/ 36 72/ 72 108/ 108	259.2/ 246.2 259.2/ 250.5 309.5/ 320.0 388.4/ 411.0	300/ 300 300/ 300 350/ 350 450/ 450
													7.5	24.2 / 22.0	— 78.9/ 90.0 157.7/ 182.0 236.6/ 273.0	— 36/ 36 72/ 72 108/ 108	274.2/ 259.8 274.2/ 267.5 328.2/ 337.0 407.1/ 428.0	350/ 300 350/ 300 400/ 400 450/ 450
													10	30.8 / 28.0	— 78.9/ 90.0 157.7/ 182.0 236.6/ 273.0	— 36/ 36 72/ 72 108/ 108	287.4/ 271.8 287.4/ 282.5 344.7/ 352.0 423.6/ 443.0	350/ 350 350/ 350 400/ 400 450/ 500

See page 169 for legend and notes.

Table 13 — Electrical Data — 50P 030 Units (cont)

380-3-60 (V-Ph-Hz)

VOLTAGE RANGE		COMPRESSOR						CONDENSER FAN MOTOR		EVAPORATOR FAN MOTOR		POWER EXHAUST			OPTIONAL ELECTRIC HEAT		POWER SUPPLY	
		No. A1			No. B1													
Min	Max	Qty	RLA (ea)	LRA (ea)	Qty	RLA (ea)	LRA (ea)	Qty	FLA	Hp	FLA	Qty	Hp (ea)	FLA (ea)	FLA	kW	MCA	FUSE OR HACR BRKR*
342	418	1	26.9	139	1	26.9	139	2	3.9 (ea)	7 1/2	12.5	—	—	—	—	—	80.8	100
															38.3	36	80.8	100
															76.8	72	92.4	110
															114.7	108	130.3	150
												2	3	4.0	—	—	88.8	110
															38.3	36	88.8	110
															76.8	72	102.4	125
															114.7	108	140.3	150
													5	9.1	—	—	99.0	125
															38.3	36	99.0	125
															76.8	72	115.2	125
															114.7	108	153.1	175
													7.5	12.5	—	—	105.8	125
															38.3	36	105.8	125
															76.8	72	123.7	125
															114.7	108	161.6	175
													10	16.7	—	—	114.2	125
															38.3	36	114.2	125
															76.8	72	134.2	150
															114.7	108	172.1	175
										10	16.7	—	—	—	—	—	85.0	110
															38.3	36	85.0	110
															76.8	72	97.7	125
															114.7	108	135.6	150
												2	3	4.0	—	—	93.0	110
															38.3	36	93.0	110
															76.8	72	107.7	125
															114.7	108	145.6	150
													5	9.1	—	—	103.2	125
															38.3	36	103.2	125
															76.8	72	120.4	125
															114.7	108	158.3	175
													7.5	12.5	—	—	110.0	125
															38.3	36	110.0	125
															76.8	72	128.9	150
															114.7	108	166.8	175
													10	16.7	—	—	118.4	125
															38.3	36	118.4	125
															76.8	72	139.4	150
															114.7	108	177.3	200
										15	24.5	—	—	—	—	—	92.8	110
															38.3	36	92.8	110
															76.8	72	107.4	125
															114.7	108	145.3	150
												2	3	4.0	—	—	100.8	125
															38.3	36	100.8	125
															76.8	72	117.4	125
															114.7	108	155.3	175
													5	9.1	—	—	111.0	125
															38.3	36	111.0	125
															76.8	72	130.2	150
															114.7	108	168.1	175
													7.5	12.5	—	—	117.8	125
															38.3	36	117.8	125
															76.8	72	138.7	150
															114.7	108	176.6	200
													10	16.7	—	—	126.2	150
															38.3	36	126.2	150
															76.8	72	149.2	150
															114.7	108	187.1	200

See page 169 for legend and notes.

Table 13 — Electrical Data — 50P 030 Units (cont)

380-3-60 (V-Ph-Hz) (cont)

VOLTAGE RANGE		COMPRESSOR						CONDENSER FAN MOTOR		EVAPORATOR FAN MOTOR		POWER EXHAUST			OPTIONAL ELECTRIC HEAT		POWER SUPPLY	
		No. A1			No. B1													
Min	Max	Qty	RLA (ea)	LRA (ea)	Qty	RLA (ea)	LRA (ea)	Qty	FLA	Hp	FLA	Qty	Hp (ea)	FLA (ea)	FLA	kW	MCA	FUSE OR HACR BRKR*
342	418	1	26.9	139	1	26.9	139	2	3.9 (ea)	20	30	—	—	—	—	—	99.1	125
															38.3	36	99.1	125
															76.8	72	114.3	125
															114.7	108	152.2	175
												2	3	4.0	—	—	107.1	125
															38.3	36	107.1	125
															76.8	72	124.3	150
															114.7	108	162.2	175
													5	9.1	—	—	117.3	125
															38.3	36	117.3	125
															76.8	72	137.1	150
															114.7	108	175.0	200
													7.5	12.5	—	—	124.1	150
															38.3	36	124.1	150
															76.8	72	145.6	150
															114.7	108	183.5	200
													10	16.7	—	—	132.5	150
															38.3	36	132.5	150
															76.8	72	156.1	175
															114.7	108	194.0	200
										25	38.0	—	—	—	—	—	109.1	125
															38.3	36	109.1	125
															76.8	72	124.3	150
															114.7	108	162.2	200
												2	3	4.0	—	—	117.1	150
															38.3	36	117.1	150
															76.8	72	134.3	150
															114.7	108	172.2	200
													5	9.1	—	—	127.3	150
															38.3	36	127.3	150
															76.8	72	147.1	175
															114.7	108	185.0	200
													7.5	12.5	—	—	134.1	150
															38.3	36	134.1	150
															76.8	72	155.6	175
															114.7	108	193.5	225
													10	16.7	—	—	142.5	175
															38.3	36	142.5	175
															76.8	72	166.1	175
															114.7	108	204.0	225
										30	43.5	—	—	—	—	—	116.0	150
															38.3	36	116.0	150
															76.8	72	131.2	150
															114.7	108	169.1	200
												2	3	4.0	—	—	124.0	150
															38.3	36	124.0	150
															76.8	72	141.2	175
															114.7	108	179.1	200
													5	9.1	—	—	134.2	175
															38.3	36	134.2	175
															76.8	72	153.9	175
															114.7	108	191.8	225
													7.5	12.5	—	—	141.0	175
															38.3	36	141.0	175
															76.8	72	162.4	175
															114.7	108	200.3	225
													10	16.7	—	—	149.4	175
															38.3	36	149.4	175
															76.8	72	172.9	200
															114.7	108	210.8	225

See page 169 for legend and notes.

Table 13 — Electrical Data — 50P 030 Units (cont)

460-3-60 (V-Ph-Hz)

VOLTAGE RANGE		COMPRESSOR						CONDENSER FAN MOTOR		EVAPORATOR FAN MOTOR		POWER EXHAUST			OPTIONAL ELECTRIC HEAT		POWER SUPPLY	
		No. A1			No. B1													
Min	Max	Qty	RLA (ea)	LRA (ea)	Qty	RLA (ea)	LRA (ea)	Qty	FLA	Hp	FLA	Qty	Hp (ea)	FLA (ea)	FLA	kW	MCA	FUSE OR HACR BRKR*
414	508	1	23.1	150	1	23.1	150	2	3.3 (ea)	7 1/2	11.0	—	—	—	—	—	69.6	90
															46.3	36	71.6	90
															93.0	72	106.8	125
															139.0	108	152.8	175
												2	3	4.8	—	—	79.2	100
															46.3	36	83.6	100
															93.0	72	118.8	125
															139.0	108	164.8	175
													5	7.6	—	—	84.8	100
															46.3	36	90.6	100
															93.0	72	125.8	150
															139.0	108	171.8	175
													7.5	11.0	—	—	91.6	110
															46.3	36	99.1	110
															93.0	72	134.3	150
															139.0	108	180.3	200
													10	14.0	—	—	97.6	110
															46.3	36	106.6	110
															93.0	72	141.8	150
															139.0	108	187.8	200
										10	14.0	—	—	—	—	—	72.6	90
															46.3	36	75.4	90
															93.0	72	110.5	125
															139.0	108	156.5	175
												2	3	4.8	—	—	82.2	100
															46.3	36	87.4	100
															93.0	72	122.5	125
															139.0	108	168.5	175
													5	7.6	—	—	87.8	110
															46.3	36	94.4	110
															93.0	72	129.5	150
															139.0	108	175.5	200
													7.5	11.0	—	—	94.6	110
															46.3	36	102.9	110
															93.0	72	138.0	150
															139.0	108	184.0	200
													10	14.0	—	—	100.6	110
															46.3	36	110.4	125
															93.0	72	145.5	150
															139.0	108	191.5	200
										15	21.0	—	—	—	—	—	79.6	100
															46.3	36	84.1	100
															93.0	72	119.3	125
															139.0	108	165.3	175
												2	3	4.8	—	—	89.2	110
															46.3	36	96.1	110
															93.0	72	131.3	150
															139.0	108	177.3	200
													5	7.6	—	—	94.8	110
															46.3	36	103.1	110
															93.0	72	138.3	150
															139.0	108	184.3	200
													7.5	11.0	—	—	101.6	110
															46.3	36	111.6	125
															93.0	72	146.8	150
															139.0	108	192.8	200
													10	14.0	—	—	107.6	125
															46.3	36	119.1	125
															93.0	72	154.3	175
															139.0	108	200.3	225

See page 169 for legend and notes.

Table 13 — Electrical Data — 50P 030 Units (cont)

460-3-60 (V-Ph-Hz) (cont)

VOLTAGE RANGE		COMPRESSOR						CONDENSER FAN MOTOR		EVAPORATOR FAN MOTOR		POWER EXHAUST			OPTIONAL ELECTRIC HEAT		POWER SUPPLY	
		No. A1			No. B1													
Min	Max	Qty	RLA (ea)	LRA (ea)	Qty	RLA (ea)	LRA (ea)	Qty	FLA	Hp	FLA	Qty	Hp (ea)	FLA (ea)	FLA	kW	MCA	FUSE OR HACR BRKR*
414	508	1	23.1	150	1	23.1	150	2	3.3 (ea)	20	27.0	—	—	—	—	—	86.6	110
															46.3	36	91.6	110
															93.0	72	126.8	150
															139.0	108	172.8	175
												2	3	4.8	—	—	96.2	110
															46.3	36	103.6	110
															93.0	72	138.8	150
															139.0	108	184.8	200
													5	7.6	—	—	101.8	125
															46.3	36	110.6	125
															93.0	72	145.8	150
															139.0	108	191.8	200
													7.5	11.0	—	—	108.6	125
															46.3	36	119.1	125
															93.0	72	154.3	175
															139.0	108	200.3	225
													10	14.0	—	—	114.6	125
															46.3	36	126.6	150
															93.0	72	161.8	175
															139.0	108	207.8	225
										25	34.0	—	—	—	—	—	95.3	125
															46.3	36	100.4	125
															93.0	72	135.5	150
															139.0	108	181.5	200
												2	3	4.8	—	—	104.9	125
															46.3	36	112.4	125
															93.0	72	147.5	175
															139.0	108	193.5	225
													5	7.6	—	—	110.5	125
															46.3	36	119.4	125
															93.0	72	154.5	175
															139.0	108	200.5	225
													7.5	11.0	—	—	117.3	150
															46.3	36	127.9	150
															93.0	72	163.0	175
															139.0	108	209.0	225
													10	14.0	—	—	123.3	150
															46.3	36	135.4	150
															93.0	72	170.5	175
															139.0	108	216.5	225
										30	40	—	—	—	—	—	102.8	125
															46.3	36	107.9	125
															93.0	72	143.0	175
															139.0	108	189.0	225
												2	3	4.8	—	—	112.4	150
															46.3	36	119.9	150
															93.0	72	155.0	175
															139.0	108	201.0	225
													5	7.6	—	—	118.0	150
															46.3	36	126.9	150
															93.0	72	162.0	175
															139.0	108	208.0	225
													7.5	11.0	—	—	124.8	150
															46.3	36	135.4	150
															93.0	72	170.5	200
															139.0	108	216.5	250
													10	14.0	—	—	130.8	150
															46.3	36	142.9	150
															93.0	72	178.0	200
															139.0	108	224.0	250

See page 169 for legend and notes.

Table 13 — Electrical Data — 50P 030 Units (cont)

575-3-60 (V-Ph-Hz)

VOLTAGE RANGE		COMPRESSOR						CONDENSER FAN MOTOR		EVAPORATOR FAN MOTOR		POWER EXHAUST			OPTIONAL ELECTRIC HEAT		POWER SUPPLY	
		No. A1			No. B1													
Min	Max	Qty	RLA (ea)	LRA (ea)	Qty	RLA (ea)	LRA (ea)	Qty	FLA	Hp	FLA	Qty	Hp (ea)	FLA (ea)	FLA	kW	MCA	FUSE OR HACR BRKR*
518	632	1	19.9	109	1	19.9	109	2	2.6 (ea)	7 1/2	9.0	—	—	—	—	—	59.0	70
															36.0	36	59.0	70
															72.0	72	83.3	100
															108.0	108	119.3	125
												2	3	3.9	—	—	66.8	80
															36.0	36	66.8	80
															72.0	72	93.0	110
															108.0	108	129.0	150
													5	6.1	—	—	71.2	90
															36.0	36	71.5	90
															72.0	72	98.5	110
															108.0	108	134.5	150
													7.5	9.0	—	—	77.0	90
															36.0	36	78.8	90
															72.0	72	105.8	110
															108.0	108	141.8	150
													10	11.0	—	—	81.0	100
															36.0	36	83.8	100
															72.0	72	110.8	125
															108.0	108	146.8	150
										10	11.0	—	—	—	—	—	61.0	80
															36.0	36	61.0	80
															72.0	72	85.8	100
															108.0	108	121.8	125
												2	3	3.9	—	—	68.8	80
															36.0	36	68.8	80
															72.0	72	95.5	110
															108.0	108	131.5	150
													5	6.1	—	—	73.2	90
															36.0	36	74.0	90
															72.0	72	101.0	110
															108.0	108	137.0	150
													7.5	9.0	—	—	79.0	90
															36.0	36	81.3	90
															72.0	72	108.3	125
															108.0	108	144.3	150
													10	11.0	—	—	83.0	100
															36.0	36	86.3	100
															72.0	72	113.3	125
															108.0	108	149.3	150
										15	17.0	—	—	—	—	—	67.0	80
															36.0	36	67.0	80
															72.0	72	93.3	110
															108.0	108	129.3	150
												2	3	3.9	—	—	74.8	90
															36.0	36	76.0	90
															72.0	72	103.0	110
															108.0	108	139.0	150
													5	6.1	—	—	79.2	90
															36.0	36	81.5	90
															72.0	72	108.5	125
															108.0	108	144.5	150
													7.5	9.0	—	—	85.0	100
															36.0	36	88.8	100
															72.0	72	115.8	125
															108.0	108	151.8	175
													10	11.0	—	—	89.0	100
															36.0	36	93.8	100
															72.0	72	120.8	125
															108.0	108	156.8	175

See page 169 for legend and notes.

Table 13 — Electrical Data — 50P 030 Units (cont)

575-3-60 (V-Ph-Hz) (cont)

VOLTAGE RANGE		COMPRESSOR						CONDENSER FAN MOTOR		EVAPORATOR FAN MOTOR		POWER EXHAUST			OPTIONAL ELECTRIC HEAT		POWER SUPPLY	
		No. A1			No. B1													
Min	Max	Qty	RLA (ea)	LRA (ea)	Qty	RLA (ea)	LRA (ea)	Qty	FLA	Hp	FLA	Qty	Hp (ea)	FLA (ea)	FLA	kW	MCA	FUSE OR HACR BRKR*
518	632	1	19.9	109	1	19.9	109	2	2.6 (ea)	20	22.0	—	—	—	—	—	72.5	90
															36.0	36	72.5	90
															72.0	72	99.5	110
															108.0	108	135.5	150
												2	3	3.9	—	—	80.3	100
															36.0	36	82.3	100
															72.0	72	109.3	125
															108.0	108	145.3	150
													5	6.1	—	—	84.7	100
															36.0	36	87.8	100
															72.0	72	114.8	125
															108.0	108	150.8	175
													7.5	9.0	—	—	90.5	110
															36.0	36	95.0	110
															72.0	72	122.0	125
															108.0	108	158.0	175
													10	11.0	—	—	94.5	110
															36.0	36	100.0	110
															72.0	72	127.0	150
															108.0	108	163.0	175
										25	27.0	—	—	—	—	—	78.8	100
															36.0	36	78.8	100
															72.0	72	105.8	125
															108.0	108	141.8	150
												2	3	3.9	—	—	86.6	110
															36.0	36	88.5	110
															72.0	72	115.5	125
															108.0	108	151.5	175
													5	6.1	—	—	91.0	110
															36.0	36	94.0	110
															72.0	72	121.0	125
															108.0	108	157.0	175
													7.5	9.0	—	—	96.8	110
															36.0	36	101.3	110
															72.0	72	128.3	150
															108.0	108	164.3	175
													10	11.0	—	—	100.8	125
															36.0	36	106.3	125
															72.0	72	133.3	150
															108.0	108	169.3	175
										30	32.0	—	—	—	—	—	85.0	110
															36.0	36	85.0	110
															72.0	72	112.0	125
															108.0	108	148.0	175
												2	3	3.9	—	—	92.8	110
															36.0	36	94.8	110
															72.0	72	121.8	150
															108.0	108	157.8	175
													5	6.1	—	—	97.2	125
															36.0	36	100.3	125
															72.0	72	127.3	150
															108.0	108	163.3	175
													7.5	9.0	—	—	103.0	125
															36.0	36	107.5	125
															72.0	72	134.5	150
															108.0	108	170.5	175
													10	11.0	—	—	107.0	125
															36.0	36	112.5	125
															72.0	72	139.5	150
															108.0	108	175.5	200

See page 169 for legend and notes.

Table 14 — Electrical Data — 50P030 Units with Optional Return Fan

208/230-3-60 (V-Ph-Hz)

VOLTAGE RANGE		COMPRESSOR						CONDENSER FAN MOTOR		EVAPORATOR FAN MOTOR		RETURN FAN			OPTIONAL ELECTRIC HEAT		POWER SUPPLY	
		No. A1			No. B1													
Min	Max	Qty	RLA (ea)	LRA (ea)	Qty	RLA (ea)	LRA (ea)	Qty	FLA	Hp	FLA	Qty	Hp (ea)	FLA (ea)	FLA	kW	MCA	FUSE OR HACR BRKR*
187	253	1	51.3	300	1	51.3	300	2	6.6 (ea)	7 1/2	24.2 / 22.0	—	—	— / —	—	—	152.8/ 150.6	200/ 200
															78.9/ 90.0	36/ 36	152.8/ 150.6	200/ 200
															157.7/ 182.0	72/ 72	188.0/ 209.5	225/ 250
															236.6/ 273.0	108/ 108	266.9/ 300.5	300/ 350
												1	10	30.8 / 28.0	—	—	183.6/ 178.6	225/ 225
															78.9/ 90.0	36/ 36	183.6/ 178.6	225/ 225
															157.7/ 182.0	72/ 72	226.5/ 244.5	250/ 250
															236.6/ 273.0	108/ 108	305.4/ 335.5	350/ 350
													15	46.2 / 42.0	—	—	199.0/ 192.6	250/ 225
															78.9/ 90.0	36/ 36	199.0/ 192.6	250/ 225
															157.7/ 182.0	72/ 72	245.7/ 262.0	250/ 300
															236.6/ 273.0	108/ 108	324.6/ 353.0	350/ 400
													20	59.4 / 54.0	—	—	214.3/ 205.3	250/ 250
															78.9/ 90.0	36/ 36	214.3/ 207.5	250/ 250
															157.7/ 182.0	72/ 72	262.2/ 277.0	300/ 300
															236.6/ 273.0	108/ 108	341.1/ 368.0	350/ 400
													25	74.8 / 68.0	—	—	233.5/ 222.8	300/ 250
															78.9/ 90.0	36/ 36	233.5/ 225.0	300/ 250
															157.7/ 182.0	72/ 72	281.5/ 294.5	350/ 350
															236.6/ 273.0	108/ 108	360.4/ 385.5	400/ 400
										10	30.8/28.0	—	—	— / —	—	—	159.4/ 156.6	200/ 200
															78.9/ 90.0	36/ 36	159.4/ 156.6	200/ 200
															157.7/ 182.0	72/ 72	196.2/ 217.0	250/ 250
															236.6/ 273.0	108/ 108	275.1/ 308.0	300/ 350
												1	10	30.8 / 28.0	—	—	190.2/ 184.6	225/ 225
															78.9/ 90.0	36/ 36	190.2/ 184.6	225/ 225
															157.7/ 182.0	72/ 72	234.7/ 252.0	250/ 300
															236.6/ 273.0	108/ 108	313.6/ 343.0	350/ 350
													15	46.2 / 42.0	—	—	205.6/ 198.6	250/ 225
															78.9/ 90.0	36/ 36	205.6/ 200.0	250/ 225
															157.7/ 182.0	72/ 72	254.0/ 269.5	300/ 300
															236.6/ 273.0	108/ 108	332.9/ 360.5	350/ 400
													20	59.4 / 54.0	—	—	220.9/ 211.3	250/ 250
															78.9/ 90.0	36/ 36	220.9/ 215.0	250/ 250
															157.7/ 182.0	72/ 72	270.5/ 284.5	300/ 300
															236.6/ 273.0	108/ 108	349.4/ 375.5	400/ 400
													25	74.8 / 68.0	—	—	240.1/ 228.8	300/ 250
															78.9/ 90.0	36/ 36	240.1/ 232.5	300/ 250
															157.7/ 182.0	72/ 72	289.7/ 302.0	350/ 350
															236.6/ 273.0	108/ 108	368.6/ 393.0	400/ 450
										15	46.2/42.0	—	—	— / —	—	—	174.8/ 170.6	225/ 200
															78.9/ 90.0	36/ 36	174.8/ 170.6	225/ 200
															157.7/ 182.0	72/ 72	215.5/ 234.5	250/ 250
															236.6/ 273.0	108/ 108	294.4/ 325.5	300/ 350
												1	10	30.8 / 28.0	—	—	205.6/ 198.6	250/ 225
															78.9/ 90.0	36/ 36	205.6/ 200.0	250/ 225
															157.7/ 182.0	72/ 72	254.0/ 269.5	300/ 300
															236.6/ 273.0	108/ 108	332.9/ 360.5	350/ 400
													15	46.2 / 42.0	—	—	221.0/ 212.6	250/ 250
															78.9/ 90.0	36/ 36	221.0/ 217.5	250/ 250
															157.7/ 182.0	72/ 72	273.2/ 287.0	300/ 300
															236.6/ 273.0	108/ 108	352.1/ 378.0	400/ 400
													20	59.4 / 54.0	—	—	236.3/ 225.3	250/ 250
															78.9/ 90.0	36/ 36	236.3/ 232.5	250/ 250
															157.7/ 182.0	72/ 72	289.7/ 302.0	300/ 350
															236.6/ 273.0	108/ 108	368.6/ 393.0	400/ 400
													25	74.8 / 68.0	—	—	255.5/ 242.8	300/ 300
															78.9/ 90.0	36/ 36	255.5/ 250.0	300/ 300
															157.7/ 182.0	72/ 72	309.0/ 319.5	350/ 350
															236.6/ 273.0	108/ 108	387.9/ 410.5	450/ 450

See page 169 for legend and notes.

Table 14 — Electrical Data — 50P030 Units with Optional Return Fan (cont)

208/230-3-60 (V-Ph-Hz) (cont)

VOLTAGE RANGE		COMPRESSOR						CONDENSER FAN MOTOR		EVAPORATOR FAN MOTOR		RETURN FAN			OPTIONAL ELECTRIC HEAT		POWER SUPPLY	
		No. A1			No. B1													
Min	Max	Qty	RLA (ea)	LRA (ea)	Qty	RLA (ea)	LRA (ea)	Qty	FLA	Hp	FLA	Qty	Hp (ea)	FLA (ea)	FLA	kW	MCA	FUSE OR HACR BRKR*
187	253	1	51.3	300	1	51.3	300	2	6.6 (ea)	20	59.4 / 54.0	—	—	— / —	—	—	190.1/ 183.3	225/ 225
															78.9/ 90.0	36/ 36	190.1/ 183.3	225/ 225
															157.7/ 182.0	72/ 72	232.0/ 249.5	250/ 300
															236.6/ 273.0	108/ 108	310.9/ 340.5	350/ 350
												1	10	30.8 / 28.0	—	—	220.9/ 211.3	250/ 250
															78.9/ 90.0	36/ 36	220.9/ 215.0	250/ 250
															157.7/ 182.0	72/ 72	270.5/ 284.5	300/ 300
															236.6/ 273.0	108/ 108	349.4/ 375.5	400/ 400
													15	46.2 / 42.0	—	—	236.3/ 225.3	250/ 250
															78.9/ 90.0	36/ 36	236.3/ 232.5	250/ 250
															157.7/ 182.0	72/ 72	289.7/ 302.0	300/ 350
															236.6/ 273.0	108/ 108	368.6/ 393.0	400/ 400
													20	59.4 / 54.0	—	—	249.5/ 237.3	300/ 250
															78.9/ 90.0	36/ 36	249.5/ 247.5	300/ 250
															157.7/ 182.0	72/ 72	306.2/ 317.0	350/ 350
															236.6/ 273.0	108/ 108	385.1/ 408.0	400/ 450
													25	74.8 / 68.0	—	—	268.7/ 254.8	300/ 300
															78.9/ 90.0	36/ 36	268.7/ 265.0	300/ 300
															157.7/ 182.0	72/ 72	325.5/ 334.5	350/ 350
															236.6/ 273.0	108/ 108	404.4/ 425.5	450/ 450
										25	74.8 / 68.0	—	—	— / —	—	—	209.3/ 200.8	250/ 250
															78.9/ 90.0	36/ 36	209.3/ 200.8	250/ 250
															157.7/ 182.0	72/ 72	251.2/ 267.0	300/ 300
															236.6/ 273.0	108/ 108	330.1/ 358.0	400/ 400
												1	10	30.8 / 28.0	—	—	240.1/ 228.8	300/ 250
															78.9/ 90.0	36/ 36	240.1/ 232.5	300/ 250
															157.7/ 182.0	72/ 72	289.7/ 302.0	350/ 350
															236.6/ 273.0	108/ 108	368.6/ 393.0	400/ 450
													15	46.2 / 42.0	—	—	255.5/ 242.8	300/ 300
															78.9/ 90.0	36/ 36	255.5/ 250.0	300/ 300
															157.7/ 182.0	72/ 72	309.0/ 319.5	350/ 350
															236.6/ 273.0	108/ 108	387.9/ 410.5	450/ 450
													20	59.4 / 54.0	—	—	268.7/ 254.8	300/ 300
															78.9/ 90.0	36/ 36	268.7/ 265.0	300/ 300
															157.7/ 182.0	72/ 72	325.5/ 334.5	350/ 350
															236.6/ 273.0	108/ 108	404.4/ 425.5	450/ 450
													25	74.8 / 68.0	—	—	284.1/ 268.8	350/ 300
															78.9/ 90.0	36/ 36	285.6/ 282.5	350/ 300
															157.7/ 182.0	72/ 72	344.7/ 352.0	400/ 400
															236.6/ 273.0	108/ 108	423.6/ 443.0	450/ 450

See page 169 for legend and notes.

Table 14 — Electrical Data — 50P030 Units with Optional Return Fan (cont)

380-3-60 (V-Ph-Hz)

VOLTAGE RANGE		COMPRESSOR						CONDENSER FAN MOTOR		EVAPORATOR FAN MOTOR		RETURN FAN			OPTIONAL ELECTRIC HEAT		POWER SUPPLY	
		No. A1			No. B1													
Min	Max	Qty	RLA (ea)	LRA (ea)	Qty	RLA (ea)	LRA (ea)	Qty	FLA	Hp	FLA	Qty	Hp (ea)	FLA (ea)	FLA	kW	MCA	FUSE OR HACR BRKR*
342	418	1	26.9	139	1	26.9	139	2	3.9 (ea)	7 1/2	12.5	—	—	—	—	—	80.8	100
															38.3	36	80.8	100
															76.8	72	92.4	110
															114.7	108	130.3	150
												1	10	16.7	—	—	97.5	110
															38.3	36	97.5	110
															76.8	72	113.3	125
															114.7	108	151.2	175
													15	24.5	—	—	105.3	125
															38.3	36	105.3	125
															76.8	72	123.1	125
															114.7	108	161.0	175
													20	30.0	—	—	111.6	125
															38.3	36	111.6	125
															76.8	72	129.9	150
															114.7	108	167.8	175
													25	38.0	—	—	121.6	150
															38.3	36	121.6	150
															76.8	72	139.9	150
															114.7	108	177.8	200
										10	16.7	—	—	—	—	—	85.0	110
															38.3	36	85.0	110
															76.8	72	97.7	125
															114.7	108	135.6	150
												1	10	16.7	—	—	101.7	125
															38.3	36	101.7	125
															76.8	72	118.6	125
															114.7	108	156.5	175
													15	24.5	—	—	109.5	125
															38.3	36	109.5	125
															76.8	72	128.3	150
															114.7	108	166.2	175
													20	30.0	—	—	115.8	125
															38.3	36	115.8	125
															76.8	72	135.2	150
															114.7	108	173.1	175
													25	38.0	—	—	125.8	150
															38.3	36	125.8	150
															76.8	72	145.2	175
															114.7	108	183.1	200
										15	24.5	—	—	—	—	—	92.8	110
															38.3	36	92.8	110
															76.8	72	107.4	125
															114.7	108	145.3	150
												1	10	16.7	—	—	109.5	125
															38.3	36	109.5	125
															76.8	72	128.3	150
															114.7	108	166.2	175
													15	24.5	—	—	117.3	125
															38.3	36	117.3	125
															76.8	72	138.1	150
															114.7	108	176.0	200
													20	30.0	—	—	123.6	150
															38.3	36	123.6	150
															76.8	72	144.9	150
															114.7	108	182.8	200
													25	38.0	—	—	133.6	150
															38.3	36	133.6	150
															76.8	72	154.9	175
															114.7	108	192.8	200

See page 169 for legend and notes.

Table 14 — Electrical Data — 50P030 Units with Optional Return Fan (cont)

380-3-60 (V-Ph-Hz) (cont)

VOLTAGE RANGE		COMPRESSOR						CONDENSER FAN MOTOR		EVAPORATOR FAN MOTOR		RETURN FAN			OPTIONAL ELECTRIC HEAT		POWER SUPPLY	
		No. A1			No. B1													
Min	Max	Qty	RLA (ea)	LRA (ea)	Qty	RLA (ea)	LRA (ea)	Qty	FLA	Hp	FLA	Qty	Hp (ea)	FLA (ea)	FLA	kW	MCA	FUSE OR HACR BRKR*
342	418	1	26.9	139	1	26.9	139	2	3.9 (ea)	20	30	—	—	—	—	—	99.1	125
															38.3	36	99.1	125
															76.8	72	114.3	125
															114.7	108	152.2	175
												1	10	16.7	—	—	115.8	125
															38.3	36	115.8	125
															76.8	72	135.2	150
															114.7	108	173.1	175
													15	24.5	—	—	123.6	150
															38.3	36	123.6	150
															76.8	72	144.9	150
															114.7	108	182.8	200
													20	30.0	—	—	129.1	150
															38.3	36	129.1	150
															76.8	72	151.8	175
															114.7	108	189.7	200
													25	38.0	—	—	139.1	175
															38.3	36	139.1	175
															76.8	72	161.8	175
															114.7	108	199.7	225
										25	38.0	—	—	—	—	—	109.1	125
															38.3	36	109.1	125
															76.8	72	124.3	150
															114.7	108	162.2	200
												1	10	16.7	—	—	125.8	150
															38.3	36	125.8	150
															76.8	72	145.2	175
															114.7	108	183.1	200
													15	24.5	—	—	133.6	150
															38.3	36	133.6	150
															76.8	72	154.9	175
															114.7	108	192.8	200
													20	30.0	—	—	139.1	175
															38.3	36	139.1	175
															76.8	72	161.8	175
															114.7	108	199.7	225
													25	38.0	—	—	147.1	175
															38.3	36	147.1	175
															76.8	72	171.8	200
															114.7	108	209.7	225

See page 169 for legend and notes.

Table 14 — Electrical Data — 50P030 Units with Optional Return Fan (cont)

460-3-60 (V-Ph-Hz)

VOLTAGE RANGE		COMPRESSOR						CONDENSER FAN MOTOR		EVAPORATOR FAN MOTOR		RETURN FAN			OPTIONAL ELECTRIC HEAT		POWER SUPPLY	
		No. A1			No. B1													
Min	Max	Qty	RLA (ea)	LRA (ea)	Qty	RLA (ea)	LRA (ea)	Qty	FLA	Hp	FLA	Qty	Hp (ea)	FLA (ea)	FLA	kW	MCA	FUSE OR HACR BRKR*
414	508	1	23.1	150	1	23.1	150	2	3.3 (ea)	7 1/2	11.0	—	—	—	—	—	69.6	90
															46.3	36	71.6	90
															93.0	72	106.8	125
															139.0	108	152.8	175
												1	10	14.0	—	—	83.6	100
															46.3	36	89.1	100
															93.0	72	124.3	125
															139.0	108	170.3	175
													15	21.0	—	—	90.6	110
															46.3	36	97.9	110
															93.0	72	133.0	150
															139.0	108	179.0	200
													20	27.0	—	—	97.6	110
															46.3	36	105.4	110
															93.0	72	140.5	150
															139.0	108	186.5	200
													25	34.0	—	—	106.3	125
															46.3	36	114.1	125
															93.0	72	149.3	175
															139.0	108	195.3	225
										10	14.0	—	—	—	—	—	72.6	90
															46.3	36	75.4	90
															93.0	72	110.5	125
															139.0	108	156.5	175
												1	10	14.0	—	—	86.6	100
															46.3	36	92.9	100
															93.0	72	128.0	150
															139.0	108	174.0	175
													15	21.0	—	—	93.6	110
															46.3	36	101.6	110
															93.0	72	136.8	150
															139.0	108	182.8	200
													20	27.0	—	—	100.6	125
															46.3	36	109.1	125
															93.0	72	144.3	150
															139.0	108	190.3	200
													25	34.0	—	—	109.3	125
															46.3	36	117.9	125
															93.0	72	153.0	175
															139.0	108	199.0	225
										15	21.0	—	—	—	—	—	79.6	100
															46.3	36	84.1	100
															93.0	72	119.3	125
															139.0	108	165.3	175
												1	10	14.0	—	—	93.6	110
															46.3	36	101.6	110
															93.0	72	136.8	150
															139.0	108	182.8	200
													15	21.0	—	—	100.6	110
															46.3	36	110.4	125
															93.0	72	145.5	150
															139.0	108	191.5	200
													20	27.0	—	—	107.6	125
															46.3	36	117.9	125
															93.0	72	153.0	175
															139.0	108	199.0	200
													25	34.0	—	—	116.3	150
															46.3	36	126.6	150
															93.0	72	161.8	175
															139.0	108	207.8	225

See page 169 for legend and notes.

Table 14 — Electrical Data — 50P030 Units with Optional Return Fan (cont)

460-3-60 (V-Ph-Hz) (cont)

VOLTAGE RANGE		COMPRESSOR						CONDENSER FAN MOTOR		EVAPORATOR FAN MOTOR		RETURN FAN			OPTIONAL ELECTRIC HEAT		POWER SUPPLY	
		No. A1			No. B1													
Min	Max	Qty	RLA (ea)	LRA (ea)	Qty	RLA (ea)	LRA (ea)	Qty	FLA	Hp	FLA	Qty	Hp (ea)	FLA (ea)	FLA	kW	MCA	FUSE OR HACR BRKR*
414	508	1	23.1	150	1	23.1	150	2	3.3 (ea)	20	27.0	—	—	—	—	—	86.6	110
															46.3	36	91.6	110
															93.0	72	126.8	150
															139.0	108	172.8	175
												1	10	14.0	—	—	100.6	125
															46.3	36	109.1	125
															93.0	72	144.3	150
															139.0	108	190.3	200
													15	21.0	—	—	107.6	125
															46.3	36	117.9	125
															93.0	72	153.0	175
															139.0	108	199.0	200
													20	27.0	—	—	113.6	125
															46.3	36	125.4	150
															93.0	72	160.5	175
															139.0	108	206.5	225
													25	34.0	—	—	122.3	150
															46.3	36	134.1	105
															93.0	72	169.3	175
															139.0	108	215.3	225
										25	34.0	—	—	—	—	—	95.3	125
															46.3	36	100.4	125
															93.0	72	135.5	150
															139.0	108	181.5	200
												1	10	14.0	—	—	109.3	125
															46.3	36	117.9	125
															93.0	72	153.0	175
															139.0	108	199.0	225
													15	21.0	—	—	116.3	150
															46.3	36	126.6	150
															93.0	72	161.8	175
															139.0	108	207.8	225
													20	27.0	—	—	122.3	150
															46.3	36	134.1	150
															93.0	72	169.3	175
															139.0	108	215.3	225
													25	34.0	—	—	129.3	150
															46.3	36	142.9	150
															93.0	72	178.0	200
															139.0	108	224.0	225

See page 169 for legend and notes.

Table 14 — Electrical Data — 50P030 Units with Optional Return Fan (cont)

575-3-60 (V-Ph-Hz)

VOLTAGE RANGE		COMPRESSOR						CONDENSER FAN MOTOR		EVAPORATOR FAN MOTOR		RETURN FAN			OPTIONAL ELECTRIC HEAT		POWER SUPPLY	
		No. A1			No. B1													
Min	Max	Qty	RLA (ea)	LRA (ea)	Qty	RLA (ea)	LRA (ea)	Qty	FLA	Hp	FLA	Qty	Hp (ea)	FLA (ea)	FLA	kW	MCA	FUSE OR HACR BRKR*
518	632	1	19.9	109	1	19.9	109	2	2.6 (ea)	7 1/2	9.0	—	—	—	—	—	59.0	70
															36.0	36	59.0	70
															72.0	72	83.3	100
															108.0	108	119.3	125
												1	10	11.0	—	—	70.0	80
															36.0	36	70.0	80
															72.0	72	97.0	110
															108.0	108	133.0	150
													15	17.0	—	—	76.0	90
															36.0	36	77.5	90
															72.0	72	104.5	110
															108.0	108	140.5	150
													20	22.0	—	—	81.5	100
															36.0	36	83.8	100
															72.0	72	110.8	125
															108.0	108	146.8	150
													25	27.0	—	—	87.8	110
															36.0	36	90.0	110
															72.0	72	117.0	125
															108.0	108	153.0	175
										10	11.0	—	—	—	—	—	61.0	80
															36.0	36	61.0	80
															72.0	72	85.8	100
															108.0	108	121.8	125
												1	10	11.0	—	—	72.0	90
															36.0	36	72.5	90
															72.0	72	99.5	110
															108.0	108	135.5	150
													15	17.0	—	—	78.0	90
															36.0	36	80.0	90
															72.0	72	107.0	110
															108.0	108	143.0	150
													20	22.0	—	—	83.5	100
															36.0	36	86.3	100
															72.0	72	113.3	125
															108.0	108	149.3	150
													25	27.0	—	—	89.8	110
															36.0	36	92.5	110
															72.0	72	119.5	125
															108.0	108	155.5	175
										15	17.0	—	—	—	—	—	67.0	80
															36.0	36	67.0	80
															72.0	72	93.3	110
															108.0	108	129.3	150
												1	10	11.0	—	—	78.0	90
															36.0	36	80.0	90
															72.0	72	107.0	110
															108.0	108	143.0	150
													15	17.0	—	—	84.0	100
															36.0	36	87.5	100
															72.0	72	114.5	125
															108.0	108	150.5	175
													20	22.0	—	—	89.5	110
															36.0	36	93.8	110
															72.0	72	120.8	125
															108.0	108	156.8	175
													25	27.0	—	—	95.8	110
															36.0	36	100.0	110
															72.0	72	127.0	150
															108.0	108	163.0	175

See page 169 for legend and notes.

Table 14 — Electrical Data — 50P030 Units with Optional Return Fan (cont)

575-3-60 (V-Ph-Hz) (cont)

VOLTAGE RANGE		COMPRESSOR						CONDENSER FAN MOTOR		EVAPORATOR FAN MOTOR		RETURN FAN			OPTIONAL ELECTRIC HEAT		POWER SUPPLY	
		No. A1			No. B1													
Min	Max	Qty	RLA (ea)	LRA (ea)	Qty	RLA (ea)	LRA (ea)	Qty	FLA	Hp	FLA	Qty	Hp (ea)	FLA (ea)	FLA	kW	MCA	FUSE OR HACR BRKR*
518	632	1	19.9	109	1	19.9	109	2	2.6 (ea)	20	22.0	—	—	—	—	—	72.5	90
															36.0	36	72.5	90
															72.0	72	99.5	110
															108.0	108	135.5	150
												1	10	11.0	—	—	83.5	100
															36.0	36	86.3	100
															72.0	72	113.3	125
															108.0	108	149.3	150
													15	17.0	—	—	89.5	110
															36.0	36	93.8	110
															72.0	72	120.8	125
															108.0	108	156.8	175
													20	22.0	—	—	94.5	110
															36.0	36	100.0	110
															72.0	72	127.0	150
															108.0	108	163.0	175
													25	27.0	—	—	100.8	125
															36.0	36	106.3	125
															72.0	72	133.3	150
															108.0	108	169.3	175
										25	27.0	—	—	—	—	—	78.8	100
															36.0	36	78.8	100
															72.0	72	105.8	125
															108.0	108	141.8	150
												1	10	11.0	—	—	89.8	110
															36.0	36	92.5	110
															72.0	72	119.5	125
															108.0	108	155.5	175
													15	17.0	—	—	95.8	110
															36.0	36	100.0	110
															72.0	72	127.0	150
															108.0	108	163.0	175
													20	22.0	—	—	100.8	125
															36.0	36	106.3	125
															72.0	72	133.3	150
															108.0	108	169.3	175
													25	27.0	—	—	105.8	125
															36.0	36	112.5	125
															72.0	72	139.5	150
															108.0	108	175.5	200

See page 169 for legend and notes.

Table 15 — Electrical Data — 50P 035 Units

208/230-3-60 (V-Ph-Hz)

VOLTAGE RANGE		COMPRESSOR						CONDENSER FAN MOTOR		EVAPORATOR FAN MOTOR		POWER EXHAUST			OPTIONAL ELECTRIC HEAT		POWER SUPPLY	
		No. A1			No. B1													
Min	Max	Qty	RLA (ea)	LRA (ea)	Qty	RLA (ea)	LRA (ea)	Qty	FLA	Hp	FLA	Qty	Hp (ea)	FLA (ea)	FLA	kW	MCA	FUSE OR HACR BRKR*
187	253	1	55.8	340	1	55.8	340	2	6.6 (ea)	7 1/2	24.2 / 22.0	—	—	— / —	— 78.9/ 90.0 157.7/ 182.0 236.6/ 273.0	— 36/ 36 72/ 72 108/ 108	163.0/ 160.8 163.0/ 160.8 188.0/ 209.5 266.9/ 300.5	200/ 200 200/ 200 250/ 250 300/ 350
												2	3	10.6 / 9.6	— 78.9/ 90.0 157.7/ 182.0 236.6/ 273.0	— 36/ 36 72/ 72 108/ 108	184.2/ 180.0 184.2/ 180.0 214.5/ 233.5 293.4/ 324.5	225/ 225 225/ 225 250/ 250 350/ 350
													5	16.7 / 15.2	— 78.9/ 90.0 157.7/ 182.0 236.6/ 273.0	— 36/ 36 72/ 72 108/ 108	196.4/ 191.2 196.4/ 191.2 229.7/ 247.5 308.6/ 338.5	250/ 225 250/ 225 250/ 300 350/ 350
													7.5	24.2 / 22.0	— 78.9/ 90.0 157.7/ 182.0 236.6/ 273.0	— 36/ 36 72/ 72 108/ 108	211.4/ 204.8 211.4/ 204.8 248.5/ 264.5 327.4/ 355.5	250/ 250 250/ 250 300/ 300 350/ 400
													10	30.8 / 28.0	— 78.9/ 90.0 157.7/ 182.0 236.6/ 273.0	— 36/ 36 72/ 72 108/ 108	224.6/ 216.8 224.6/ 216.8 265.0/ 279.5 343.9/ 370.5	250/ 250 250/ 250 300/ 300 350/ 400
										10	30.8 / 28.0	—	—	— / —	— 78.9/ 90.0 157.7/ 182.0 236.6/ 273.0	— 36/ 36 72/ 72 108/ 108	169.6/ 166.8 169.6/ 166.8 196.2/ 217.0 275.1/ 308.0	225/ 200 225/ 200 250/ 250 300/ 350
												2	3	10.6 / 9.6	— 78.9/ 90.0 157.7/ 182.0 236.6/ 273.0	— 36/ 36 72/ 72 108/ 108	190.8/ 186.0 190.8/ 186.0 222.7/ 241.0 301.6/ 332.0	225/ 225 225/ 225 250/ 250 350/ 350
													5	16.7 / 15.2	— 78.9/ 90.0 157.7/ 182.0 236.6/ 273.0	— 36/ 36 72/ 72 108/ 108	203.0/ 197.2 203.0/ 197.2 238.0/ 255.0 316.9/ 346.0	250/ 250 250/ 250 250/ 300 350/ 400
													7.5	24.2 / 22.0	— 78.9/ 90.0 157.7/ 182.0 236.6/ 273.0	— 36/ 36 72/ 72 108/ 108	218.0/ 210.8 218.0/ 210.8 256.7/ 272.0 335.6/ 363.0	250/ 250 250/ 250 300/ 300 350/ 400
													10	30.8 / 28.0	— 78.9/ 90.0 157.7/ 182.0 236.6/ 273.0	— 36/ 36 72/ 72 108/ 108	231.2/ 222.8 231.2/ 222.8 273.2/ 287.0 352.1/ 378.0	250/ 250 250/ 250 300/ 300 400/ 400
										15	46.2 / 42.0	—	—	— / —	— 78.9/ 90.0 157.7/ 182.0 236.6/ 273.0	— 36/ 36 72/ 72 108/ 108	185.0/ 180.8 185.0/ 180.8 215.5/ 234.5 294.4/ 325.5	225/ 225 225/ 225 250/ 250 350/ 350
												2	3	10.6 / 9.6	— 78.9/ 90.0 157.7/ 182.0 236.6/ 273.0	— 36/ 36 72/ 72 108/ 108	206.2/ 200.0 206.2/ 200.0 242.0/ 258.5 320.9/ 349.5	250/ 250 250/ 250 250/ 300 350/ 400
													5	16.7 / 15.2	— 78.9/ 90.0 157.7/ 182.0 236.6/ 273.0	— 36/ 36 72/ 72 108/ 108	218.4/ 211.2 218.4/ 211.2 257.2/ 272.5 336.1/ 363.5	250/ 250 250/ 250 300/ 300 350/ 400
													7.5	24.2 / 22.0	— 78.9/ 90.0 157.7/ 182.0 236.6/ 273.0	— 36/ 36 72/ 72 108/ 108	233.4/ 224.8 233.4/ 224.8 276.0/ 289.5 354.9/ 380.5	250/ 250 250/ 250 300/ 300 400/ 400
													10	30.8 / 28.0	— 78.9/ 90.0 157.7/ 182.0 236.6/ 273.0	— 36/ 36 72/ 72 108/ 108	246.6/ 236.8 246.6/ 236.8 292.5/ 304.5 371.4/ 395.5	300/ 250 300/ 250 300/ 350 400/ 400

See page 169 for legend and notes.

Table 15 — Electrical Data — 50P 035 Units (cont)

208/230-3-60 (V-Ph-Hz) (cont)

VOLTAGE RANGE		COMPRESSOR						CONDENSER FAN MOTOR		EVAPORATOR FAN MOTOR		POWER EXHAUST			OPTIONAL ELECTRIC HEAT		POWER SUPPLY	
		No. A1			No. B1													
Min	Max	Qty	RLA (ea)	LRA (ea)	Qty	RLA (ea)	LRA (ea)	Qty	FLA	Hp	FLA	Qty	Hp (ea)	FLA (ea)	FLA	kW	MCA	FUSE OR HACR BRKR*
187	253	1	55.8	340	1	55.8	340	2	6.6 (ea)	20	59.4 / 54.0	—	—	— / —	— 78.9/ 90.0 157.7/ 182.0 236.6/ 273.0	— 36/ 36 72/ 72 108/ 108	199.1/ 192.8 199.1/ 192.8 232.0/ 249.5 310.9/ 340.5	250/ 225 250/ 225 250/ 300 350/ 350
												2	3	10.6 / 9.6	— 78.9/ 90.0 157.7/ 182.0 236.6/ 273.0	— 36/ 36 72/ 72 108/ 108	220.3/ 212.0 220.3/ 212.0 258.5/ 273.5 337.4/ 364.5	250/ 250 250/ 250 300/ 300 350/ 400
													5	16.7 / 15.2	— 78.9/ 90.0 157.7/ 182.0 236.6/ 273.0	— 36/ 36 72/ 72 108/ 108	232.5/ 223.2 232.5/ 223.2 273.7/ 287.5 352.6/ 378.5	250/ 250 250/ 250 300/ 300 400/ 400
													7.5	24.2 / 22.0	— 78.9/ 90.0 157.7/ 182.0 236.6/ 273.0	— 36/ 36 72/ 72 108/ 108	247.5/ 236.8 247.5/ 236.8 292.5/ 304.5 371.4/ 395.5	300/ 250 300/ 250 300/ 350 400/ 400
													10	30.8 / 28.0	— 78.9/ 90.0 157.7/ 182.0 236.6/ 273.0	— 36/ 36 72/ 72 108/ 108	260.7/ 248.8 260.7/ 250.0 309.0/ 319.5 387.9/ 410.5	300/ 300 300/ 300 350/ 350 400/ 450
										25	74.8 / 68.0	—	—	— / —	— 78.9/ 90.0 157.7/ 182.0 236.6/ 273.0	— 36/ 36 72/ 72 108/ 108	218.3/ 209.8 218.3/ 209.8 251.2/ 267.0 330.1/ 358.0	250/ 250 250/ 250 300/ 300 400/ 400
												2	3	10.6 / 9.6	— 78.9/ 90.0 157.7/ 182.0 236.6/ 273.0	— 36/ 36 72/ 72 108/ 108	239.5/ 229.0 239.5/ 229.0 277.7/ 291.0 356.6/ 382.0	300/ 250 300/ 250 300/ 350 400/ 400
													5	16.7 / 15.2	— 78.9/ 90.0 157.7/ 182.0 236.6/ 273.0	— 36/ 36 72/ 72 108/ 108	251.7/ 240.2 251.7/ 240.2 293.0/ 305.0 371.9/ 396.0	300/ 300 300/ 300 350/ 350 400/ 450
													7.5	24.2 / 22.0	— 78.9/ 90.0 157.7/ 182.0 236.6/ 273.0	— 36/ 36 72/ 72 108/ 108	266.7/ 253.8 266.7/ 253.8 311.7/ 322.0 390.6/ 413.0	300/ 300 300/ 300 350/ 350 450/ 450
													10	30.8 / 28.0	— 78.9/ 90.0 157.7/ 182.0 236.6/ 273.0	— 36/ 36 72/ 72 108/ 108	279.9/ 265.8 279.9/ 267.5 328.2/ 337.0 407.1/ 428.0	350/ 300 350/ 300 350/ 350 450/ 450
										30	88.0 / 80.0	—	—	— / —	— 78.9/ 90.0 157.7/ 182.0 236.6/ 273.0	— 36/ 36 72/ 72 108/ 108	234.8/ 224.8 234.8/ 224.8 267.7/ 282.0 346.6/ 373.0	300/ 300 300/ 300 350/ 350 400/ 450
												2	3	10.6 / 9.6	— 78.9/ 90.0 157.7/ 182.0 236.6/ 273.0	— 36/ 36 72/ 72 108/ 108	256.0/ 244.0 256.0/ 244.0 294.2/ 306.0 373.1/ 397.0	300/ 300 300/ 300 350/ 350 450/ 450
													5	16.7 / 15.2	— 78.9/ 90.0 157.7/ 182.0 236.6/ 273.0	— 36/ 36 72/ 72 108/ 108	268.2/ 255.2 268.2/ 255.2 309.5/ 320.0 388.4/ 411.0	350/ 300 350/ 300 350/ 350 450/ 450
													7.5	24.2 / 22.0	— 78.9/ 90.0 157.7/ 182.0 236.6/ 273.0	— 36/ 36 72/ 72 108/ 108	283.2/ 268.8 283.2/ 268.8 328.2/ 337.0 407.1/ 428.0	350/ 300 350/ 300 400/ 400 450/ 450
													10	30.8 / 28.0	— 78.9/ 90.0 157.7/ 182.0 236.6/ 273.0	— 36/ 36 72/ 72 108/ 108	296.4/ 280.8 296.4/ 282.5 344.7/ 352.0 423.6/ 443.0	350/ 350 350/ 350 400/ 400 450/ 500

See page 169 for legend and notes.

Table 15 — Electrical Data — 50P 035 Units (cont)

380-3-60 (V-Ph-Hz)

VOLTAGE RANGE		COMPRESSOR						CONDENSER FAN MOTOR		EVAPORATOR FAN MOTOR		POWER EXHAUST			OPTIONAL ELECTRIC HEAT		POWER SUPPLY	
		No. A1			No. B1													
Min	Max	Qty	RLA (ea)	LRA (ea)	Qty	RLA (ea)	LRA (ea)	Qty	FLA	Hp	FLA	Qty	Hp (ea)	FLA (ea)	FLA	kW	MCA	FUSE OR HACR BRKR*
342	418	1	34	196	1	34	196	2	4.7 (ea)	7 1/2	12.5	—	—	—	—	—	98.4	125
															38.3	36	98.4	125
															76.8	72	98.4	125
															114.7	108	130.3	150
												2	3	4.0	—	—	106.4	125
															38.3	36	106.4	125
															76.8	72	106.4	125
															114.7	108	140.3	175
													5	9.1	—	—	116.6	150
															38.3	36	116.6	150
															76.8	72	116.6	150
															114.7	108	153.1	175
													7.5	12.5	—	—	123.4	150
															38.3	36	123.4	150
															76.8	72	123.7	150
															114.7	108	161.6	175
													10	16.7	—	—	131.8	150
															38.3	36	131.8	150
															76.8	72	134.2	150
															114.7	108	172.1	200
										10	16.7	—	—	—	—	—	102.6	125
															38.3	36	102.6	125
															76.8	72	102.6	125
															114.7	108	135.6	150
												2	3	4.0	—	—	110.6	125
															38.3	36	110.6	125
															76.8	72	110.6	125
															114.7	108	145.6	175
													5	9.1	—	—	120.8	150
															38.3	36	120.8	150
															76.8	72	120.8	150
															114.7	108	158.3	175
													7.5	12.5	—	—	127.6	150
															38.3	36	127.6	150
															76.8	72	128.9	150
															114.7	108	166.8	175
													10	16.7	—	—	136.0	150
															38.3	36	136.0	150
															76.8	72	139.4	150
															114.7	108	177.3	200
										15	24.5	—	—	—	—	—	110.4	125
															38.3	36	110.4	125
															76.8	72	110.4	125
															114.7	108	145.3	175
												2	3	4.0	—	—	118.4	150
															38.3	36	118.4	150
															76.8	72	118.4	150
															114.7	108	155.3	175
													5	9.1	—	—	128.6	150
															38.3	36	128.6	150
															76.8	72	130.2	150
															114.7	108	168.1	175
													7.5	12.5	—	—	135.4	150
															38.3	36	135.4	150
															76.8	72	138.7	150
															114.7	108	176.6	200
													10	16.7	—	—	143.8	175
															38.3	36	143.8	175
															76.8	72	149.2	175
															114.7	108	187.1	200

See page 169 for legend and notes.

Table 15 — Electrical Data — 50P 035 Units (cont)

380-3-60 (V-Ph-Hz) (cont)

VOLTAGE RANGE		COMPRESSOR						CONDENSER FAN MOTOR		EVAPORATOR FAN MOTOR		POWER EXHAUST			OPTIONAL ELECTRIC HEAT		POWER SUPPLY	
		No. A1			No. B1													
Min	Max	Qty	RLA (ea)	LRA (ea)	Qty	RLA (ea)	LRA (ea)	Qty	FLA	Hp	FLA	Qty	Hp (ea)	FLA (ea)	FLA	kW	MCA	FUSE OR HACR BRKR*
342	418	1	34	196	1	34	196	2	4.7 (ea)	20	30.0	—	—	—	—	—	115.9	125
															38.3	36	115.9	125
															76.8	72	115.9	125
															114.7	108	152.2	175
												2	3	4.0	—	—	123.9	150
															38.3	36	123.9	150
															76.8	72	124.3	150
															114.7	108	162.2	175
													5	9.1	—	—	134.1	150
															38.3	36	134.1	150
															76.8	72	137.1	150
															114.7	108	175.0	200
													7.5	12.5	—	—	140.9	150
															38.3	36	140.9	150
															76.8	72	145.6	150
															114.7	108	183.5	200
													10	16.7	—	—	149.3	175
															38.3	36	149.3	175
															76.8	72	156.1	175
															114.7	108	194.0	200
										25	38.0	—	—	—	—	—	124.9	150
															38.3	36	124.9	150
															76.8	72	124.9	150
															114.7	108	162.2	200
												2	3	4.0	—	—	132.9	150
															38.3	36	132.9	150
															76.8	72	134.3	150
															114.7	108	172.2	200
													5	9.1	—	—	143.1	175
															38.3	36	143.1	175
															76.8	72	147.1	175
															114.7	108	185.0	200
													7.5	12.5	—	—	149.9	175
															38.3	36	149.9	175
															76.8	72	155.6	175
															114.7	108	193.5	225
													10	16.7	—	—	158.3	175
															38.3	36	158.3	175
															76.8	72	166.1	175
															114.7	108	204.0	225
										30	43.5	—	—	—	—	—	131.8	175
															38.3	36	131.8	175
															76.8	72	131.8	175
															114.7	108	169.1	200
												2	3	4.0	—	—	139.8	175
															38.3	36	139.8	175
															76.8	72	141.2	175
															114.7	108	179.1	200
													5	9.1	—	—	150.0	175
															38.3	36	150.0	175
															76.8	72	153.9	175
															114.7	108	191.8	225
													7.5	12.5	—	—	156.8	200
															38.3	36	156.8	200
															76.8	72	162.4	200
															114.7	108	200.3	225
													10	16.7	—	—	165.2	200
															38.3	36	165.2	200
															76.8	72	172.9	200
															114.7	108	210.8	225

See page 169 for legend and notes.

Table 15 — Electrical Data — 50P 035 Units (cont)

460-3-60 (V-Ph-Hz)

VOLTAGE RANGE		COMPRESSOR						CONDENSER FAN MOTOR		EVAPORATOR FAN MOTOR		POWER EXHAUST			OPTIONAL ELECTRIC HEAT		POWER SUPPLY	
		No. A1			No. B1													
Min	Max	Qty	RLA (ea)	LRA (ea)	Qty	RLA (ea)	LRA (ea)	Qty	FLA	Hp	FLA	Qty	Hp (ea)	FLA (ea)	FLA	kW	MCA	FUSE OR HACR BRKR*
414	508	1	26.9	179	1	26.9	179	2	3.3 (ea)	7 1/2	11.0	—	—	—	—	—	78.1	100
															46.3	36	78.1	100
															93.0	72	106.8	125
															139.0	108	152.8	175
												2	3	4.8	—	—	87.7	110
															46.3	36	87.7	110
															93.0	72	118.8	125
															139.0	108	164.8	175
													5	7.6	—	—	93.3	110
															46.3	36	93.3	110
															93.0	72	125.8	150
															139.0	108	171.8	175
													7.5	11.0	—	—	100.1	125
															46.3	36	100.1	125
															93.0	72	134.3	150
															139.0	108	180.3	200
													10	14.0	—	—	106.1	125
															46.3	36	106.6	125
															93.0	72	141.8	150
															139.0	108	187.8	200
										10	14.0	—	—	—	—	—	81.1	100
															46.3	36	81.1	100
															93.0	72	110.5	125
															139.0	108	156.5	175
												2	3	4.8	—	—	90.7	110
															46.3	36	90.7	110
															93.0	72	122.5	150
															139.0	108	168.5	175
													5	7.6	—	—	96.3	110
															46.3	36	96.3	110
															93.0	72	129.5	150
															139.0	108	175.5	200
													7.5	11.0	—	—	103.1	125
															46.3	36	103.1	125
															93.0	72	138.0	150
															139.0	108	184.0	200
													10	14.0	—	—	109.1	125
															46.3	36	110.4	125
															93.0	72	145.5	150
															139.0	108	191.5	200
										15	21.0	—	—	—	—	—	88.1	110
															46.3	36	88.1	110
															93.0	72	119.3	125
															139.0	108	165.3	175
												2	3	4.8	—	—	97.7	110
															46.3	36	97.7	110
															93.0	72	131.3	150
															139.0	108	177.3	200
													5	7.6	—	—	103.3	125
															46.3	36	103.3	125
															93.0	72	138.3	150
															139.0	108	184.3	200
													7.5	11.0	—	—	110.1	125
															46.3	36	111.6	125
															93.0	72	146.8	150
															139.0	108	192.8	200
													10	14.0	—	—	116.1	125
															46.3	36	119.1	125
															93.0	72	154.3	175
															139.0	108	200.3	225

See page 169 for legend and notes.

Table 15 — Electrical Data — 50P 035 Units (cont)

460-3-60 (V-Ph-Hz) (cont)

VOLTAGE RANGE		COMPRESSOR						CONDENSER FAN MOTOR		EVAPORATOR FAN MOTOR		POWER EXHAUST			OPTIONAL ELECTRIC HEAT		POWER SUPPLY	
		No. A1			No. B1													
Min	Max	Qty	RLA (ea)	LRA (ea)	Qty	RLA (ea)	LRA (ea)	Qty	FLA	Hp	FLA	Qty	Hp (ea)	FLA (ea)	FLA	kW	MCA	FUSE OR HACR BRKR*
414	508	1	26.9	179	1	26.9	179	2	3.3 (ea)	20	27.0	—	—	—	—	—	94.2	110
															46.3	36	94.2	110
															93.0	72	126.8	150
															139.0	108	172.8	175
												2	3	4.8	—	—	103.8	125
															46.3	36	103.8	125
															93.0	72	138.8	150
															139.0	108	184.8	200
													5	7.6	—	—	109.4	125
															46.3	36	110.6	125
															93.0	72	145.8	150
															139.0	108	191.8	200
													7.5	11.0	—	—	116.2	125
															46.3	36	119.1	125
															93.0	72	154.3	175
															139.0	108	200.3	225
													10	14.0	—	—	122.2	125
															46.3	36	126.6	150
															93.0	72	161.8	175
															139.0	108	207.8	225
										25	34.0	—	—	—	—	—	102.9	125
															46.3	36	102.9	125
															93.0	72	135.5	150
															139.0	108	181.5	200
												2	3	4.8	—	—	112.5	125
															46.3	36	112.5	125
															93.0	72	147.5	175
															139.0	108	193.5	225
													5	7.6	—	—	118.1	150
															46.3	36	119.4	150
															93.0	72	154.5	175
															139.0	108	200.5	225
													7.5	11.0	—	—	124.9	150
															46.3	36	127.9	150
															93.0	72	163.0	175
															139.0	108	209.0	225
													10	14.0	—	—	130.9	150
															46.3	36	135.4	150
															93.0	72	170.5	175
															139.0	108	216.5	225
										30	40	—	—	—	—	—	110.4	150
															46.3	36	110.4	150
															93.0	72	143.0	175
															139.0	108	189.0	225
												2	3	4.8	—	—	120.0	150
															46.3	36	120.0	150
															93.0	72	155.0	175
															139.0	108	201.0	225
													5	7.6	—	—	125.6	150
															46.3	36	126.9	150
															93.0	72	162.0	175
															139.0	108	208.0	225
													7.5	11.0	—	—	132.4	150
															46.3	36	135.4	150
															93.0	72	170.5	200
															139.0	108	216.5	250
													10	14.0	—	—	138.4	175
															46.3	36	142.9	175
															93.0	72	178.0	200
															139.0	108	224.0	250

See page 169 for legend and notes.

Table 15 — Electrical Data — 50P 035 Units (cont)

575-3-60 (V-Ph-Hz)

VOLTAGE RANGE		COMPRESSOR						CONDENSER FAN MOTOR		EVAPORATOR FAN MOTOR		POWER EXHAUST			OPTIONAL ELECTRIC HEAT		POWER SUPPLY	
		No. A1			No. B1													
Min	Max	Qty	RLA (ea)	LRA (ea)	Qty	RLA (ea)	LRA (ea)	Qty	FLA	Hp	FLA	Qty	Hp (ea)	FLA (ea)	FLA	kW	MCA	FUSE OR HACR BRKR*
518	632	1	23.7	132	1	23.7	132	2	2.6 (ea)	7 1/2	9.0	—	—	—	—	—	67.5	90
															36.0	36	67.5	90
															72.0	72	83.3	110
															108.0	108	119.3	125
												2	3	3.9	—	—	75.3	90
															36.0	36	75.3	90
															72.0	72	93.0	110
															108.0	108	129.0	150
													5	6.1	—	—	79.7	100
															36.0	36	79.7	100
															72.0	72	98.5	110
															108.0	108	134.5	150
													7.5	9.0	—	—	85.5	100
															36.0	36	85.5	100
															72.0	72	105.8	125
															108.0	108	141.8	150
													10	11.0	—	—	89.5	110
															36.0	36	89.5	110
															72.0	72	110.8	125
															108.0	108	146.8	150
										10	11.0	—	—	—	—	—	69.5	90
															36.0	36	69.5	90
															72.0	72	85.8	110
															108.0	108	121.8	125
												2	3	3.9	—	—	77.3	100
															36.0	36	77.3	100
															72.0	72	95.5	110
															108.0	108	131.5	150
													5	6.1	—	—	81.7	100
															36.0	36	81.7	100
															72.0	72	101.0	110
															108.0	108	137.0	150
													7.5	9.0	—	—	87.5	110
															36.0	36	87.5	110
															72.0	72	108.3	125
															108.0	108	144.3	150
													10	11.0	—	—	91.5	110
															36.0	36	91.5	110
															72.0	72	113.3	125
															108.0	108	149.3	150
										15	17.0	—	—	—	—	—	75.5	90
															36.0	36	75.5	90
															72.0	72	93.3	110
															108.0	108	129.3	150
												2	3	3.9	—	—	83.3	100
															36.0	36	83.3	100
															72.0	72	103.0	125
															108.0	108	139.0	150
													5	6.1	—	—	87.7	110
															36.0	36	87.7	110
															72.0	72	108.5	125
															108.0	108	144.5	150
													7.5	9.0	—	—	93.5	110
															36.0	36	93.5	110
															72.0	72	115.8	125
															108.0	108	151.8	175
													10	11.0	—	—	97.5	110
															36.0	36	97.5	110
															72.0	72	120.8	125
															108.0	108	156.8	175

See page 169 for legend and notes.

Table 15 — Electrical Data — 50P 035 Units (cont)

575-3-60 (V-Ph-Hz) (cont)

VOLTAGE RANGE		COMPRESSOR						CONDENSER FAN MOTOR		EVAPORATOR FAN MOTOR		POWER EXHAUST			OPTIONAL ELECTRIC HEAT		POWER SUPPLY	
		No. A1			No. B1													
Min	Max	Qty	RLA (ea)	LRA (ea)	Qty	RLA (ea)	LRA (ea)	Qty	FLA	Hp	FLA	Qty	Hp (ea)	FLA (ea)	FLA	kW	MCA	FUSE OR HACR BRKR*
518	632	1	23.7	132	1	23.7	132	2	2.6 (ea)	20	22.0	—	—	—	—	—	80.5	100
															36.0	36	80.5	100
															72.0	72	99.5	110
															108.0	108	135.5	150
												2	3	3.9	—	—	88.3	110
															36.0	36	88.3	110
															72.0	72	109.3	125
															108.0	108	145.3	150
													5	6.1	—	—	92.7	110
															36.0	36	92.7	110
															72.0	72	114.8	125
															108.0	108	150.8	175
													7.5	9.0	—	—	98.5	110
															36.0	36	98.5	110
															72.0	72	122.0	125
															108.0	108	158.0	175
													10	11.0	—	—	102.5	125
															36.0	36	102.5	125
															72.0	72	127.0	150
															108.0	108	163.0	175
										25	27.0	—	—	—	—	—	86.4	110
															36.0	36	86.4	110
															72.0	72	105.8	125
															108.0	108	141.8	150
												2	3	3.9	—	—	94.2	110
															36.0	36	94.2	110
															72.0	72	115.5	125
															108.0	108	151.5	175
													5	6.1	—	—	98.6	125
															36.0	36	98.6	125
															72.0	72	121.0	125
															108.0	108	157.0	175
													7.5	9.0	—	—	104.4	125
															36.0	36	104.4	125
															72.0	72	128.3	150
															108.0	108	164.3	175
													10	11.0	—	—	108.4	125
															36.0	36	108.4	125
															72.0	72	133.3	150
															108.0	108	169.3	175
										30	32.0	—	—	—	—	—	92.6	110
															36.0	36	92.6	110
															72.0	72	112.0	125
															108.0	108	148.0	175
												2	3	3.9	—	—	100.4	125
															36.0	36	100.4	125
															72.0	72	121.8	150
															108.0	108	157.8	175
													5	6.1	—	—	104.8	125
															36.0	36	104.8	125
															72.0	72	127.3	150
															108.0	108	163.3	175
													7.5	9.0	—	—	110.6	125
															36.0	36	110.6	125
															72.0	72	134.5	150
															108.0	108	170.5	175
													10	11.0	—	—	114.6	125
															36.0	36	114.6	125
															72.0	72	139.5	150
															108.0	108	175.5	200

See page 169 for legend and notes.

Table 16 — Electrical Data — 50P035 Units with Optional Return Fan

208/230-3-60 (V-Ph-Hz)

VOLTAGE RANGE		COMPRESSOR						CONDENSER FAN MOTOR		EVAPORATOR FAN MOTOR		RETURN FAN			OPTIONAL ELECTRIC HEAT		POWER SUPPLY	
		No. A1			No. B1													
Min	Max	Qty	RLA (ea)	LRA (ea)	Qty	RLA (ea)	LRA (ea)	Qty	FLA	Hp	FLA	Qty	Hp (ea)	FLA (ea)	FLA	kW	MCA	FUSE OR HACR BRKR*
187	253	1	55.8	340	1	55.8	340	2	6.6 (ea)	7 1/2	24.2 / 22.0	—	—	— / —	— / — 78.9 / 90.0 157.7 / 182.0 236.6 / 273.0	— / — 36 / 36 72 / 72 108 / 108	163.0 / 160.8 163.0 / 160.8 188.0 / 209.5 266.9 / 300.5	200 / 200 200 / 200 250 / 250 300 / 350
												1	10	30.8 / 28.0	— / — 78.9 / 90.0 157.7 / 182.0 236.6 / 273.0	— / — 36 / 36 72 / 72 108 / 108	193.8 / 188.8 193.8 / 188.8 226.5 / 244.5 305.4 / 335.5	225 / 225 225 / 225 250 / 300 350 / 350
													15	46.2 / 42.0	— / — 78.9 / 90.0 157.7 / 182.0 236.6 / 273.0	— / — 36 / 36 72 / 72 108 / 108	209.2 / 202.8 209.2 / 202.8 245.7 / 262.0 324.6 / 353.0	250 / 250 250 / 250 250 / 300 350 / 400
													20	59.4 / 54.0	— / — 78.9 / 90.0 157.7 / 182.0 236.6 / 273.0	— / — 36 / 36 72 / 72 108 / 108	223.3 / 214.8 223.3 / 214.8 262.2 / 277.0 341.1 / 368.0	250 / 250 250 / 250 300 / 300 350 / 400
													25	74.8 / 68.0	— / — 78.9 / 90.0 157.7 / 182.0 236.6 / 273.0	— / — 36 / 36 72 / 72 108 / 108	242.5 / 231.8 242.5 / 231.8 281.5 / 294.5 360.4 / 385.5	300 / 250 300 / 250 350 / 350 400 / 400
										10	30.8 / 28.0	—	—	— / —	— / — 78.9 / 90.0 157.7 / 182.0 236.6 / 273.0	— / — 36 / 36 72 / 72 108 / 108	169.6 / 166.8 169.6 / 166.8 196.2 / 217.0 275.1 / 308.0	225 / 200 225 / 200 250 / 250 300 / 350
												1	10	30.8 / 28.0	— / — 78.9 / 90.0 157.7 / 182.0 236.6 / 273.0	— / — 36 / 36 72 / 72 108 / 108	200.4 / 194.8 200.4 / 194.8 234.7 / 252.0 313.6 / 343.0	250 / 250 250 / 250 250 / 300 350 / 350
													15	46.2 / 42.0	— / — 78.9 / 90.0 157.7 / 182.0 236.6 / 273.0	— / — 36 / 36 72 / 72 108 / 108	215.8 / 208.8 215.8 / 208.8 254.0 / 269.5 332.9 / 360.5	250 / 250 250 / 250 300 / 300 350 / 400
													20	59.4 / 54.0	— / — 78.9 / 90.0 157.7 / 182.0 236.6 / 273.0	— / — 36 / 36 72 / 72 108 / 108	229.9 / 220.8 229.9 / 220.8 270.5 / 284.5 349.4 / 375.5	250 / 250 250 / 250 300 / 300 400 / 400
													25	74.8 / 68.0	— / — 78.9 / 90.0 157.7 / 182.0 236.6 / 273.0	— / — 36 / 36 72 / 72 108 / 108	249.1 / 237.8 249.1 / 237.8 289.7 / 302.0 368.6 / 393.0	300 / 300 300 / 300 350 / 350 400 / 450
										15	46.2 / 42.0	—	—	— / —	— / — 78.9 / 90.0 157.7 / 182.0 236.6 / 273.0	— / — 36 / 36 72 / 72 108 / 108	185.0 / 180.8 185.0 / 180.8 215.5 / 234.5 294.4 / 325.5	225 / 225 225 / 225 250 / 250 350 / 350
												1	10	30.8 / 28.0	— / — 78.9 / 90.0 157.7 / 182.0 236.6 / 273.0	— / — 36 / 36 72 / 72 108 / 108	215.8 / 208.8 215.8 / 208.8 254.0 / 269.5 332.9 / 360.5	250 / 250 250 / 250 300 / 300 350 / 400
													15	46.2 / 42.0	— / — 78.9 / 90.0 157.7 / 182.0 236.6 / 273.0	— / — 36 / 36 72 / 72 108 / 108	231.2 / 222.8 231.2 / 222.8 273.2 / 287.0 352.1 / 378.0	250 / 250 250 / 250 300 / 300 400 / 400
													20	59.4 / 54.0	— / — 78.9 / 90.0 157.7 / 182.0 236.6 / 273.0	— / — 36 / 36 72 / 72 108 / 108	245.3 / 234.8 245.3 / 234.8 289.7 / 302.0 368.6 / 393.0	300 / 250 300 / 250 300 / 350 400 / 400
													25	74.8 / 68.0	— / — 78.9 / 90.0 157.7 / 182.0 236.6 / 273.0	— / — 36 / 36 72 / 72 108 / 108	264.5 / 251.8 264.5 / 251.8 309.0 / 319.5 387.9 / 410.5	300 / 300 300 / 300 350 / 350 450 / 450

See page 169 for legend and notes.

Table 16 — Electrical Data — 50P035 with Optional Return Fan (cont)

208/230-3-60 (V-Ph-Hz) (cont)

VOLTAGE RANGE		COMPRESSOR						CONDENSER FAN MOTOR		EVAPORATOR FAN MOTOR		RETURN FAN			OPTIONAL ELECTRIC HEAT		POWER SUPPLY	
		No. A1			No. B1													
Min	Max	Qty	RLA (ea)	LRA (ea)	Qty	RLA (ea)	LRA (ea)	Qty	FLA	Hp	FLA	Qty	Hp (ea)	FLA (ea)	FLA	kW	MCA	FUSE OR HACR BRKR*
187	253	1	55.8	340	1	55.8	340	2	6.6 (ea)	20	59.4 / 54.0	—	—	— / —	— / — 78.9 / 90.0 157.7 / 182.0 236.6 / 273.0	— / — 36 / 36 72 / 72 108 / 108	199.1 / 192.8 199.1 / 192.8 232.0 / 249.5 310.9 / 340.5	250 / 225 250 / 225 250 / 300 350 / 350
												1	10	30.8 / 28.0	— / — 78.9 / 90.0 157.7 / 182.0 236.6 / 273.0	— / — 36 / 36 72 / 72 108 / 108	229.9 / 220.8 229.9 / 220.8 270.5 / 284.5 349.4 / 375.5	250 / 250 250 / 250 300 / 300 400 / 400
													15	46.2 / 42.0	— / — 78.9 / 90.0 157.7 / 182.0 236.6 / 273.0	— / — 36 / 36 72 / 72 108 / 108	245.3 / 234.8 245.3 / 234.8 289.7 / 302.0 368.6 / 393.0	300 / 250 300 / 250 300 / 350 400 / 400
													20	59.4 / 54.0	— / — 78.9 / 90.0 157.7 / 182.0 236.6 / 273.0	— / — 36 / 36 72 / 72 108 / 108	258.5 / 246.8 258.5 / 247.5 306.2 / 317.0 385.1 / 408.0	300 / 300 300 / 300 350 / 350 400 / 450
													25	74.8 / 68.0	— / — 78.9 / 90.0 157.7 / 182.0 236.6 / 273.0	— / — 36 / 36 72 / 72 108 / 108	277.7 / 263.8 277.7 / 265.0 325.5 / 334.5 404.4 / 425.5	350 / 300 350 / 300 350 / 350 450 / 450
										25	74.8 / 68.0	—	—	— / —	— / — 78.9 / 90.0 157.7 / 182.0 236.6 / 273.0	— / — 36 / 36 72 / 72 108 / 108	218.3 / 209.8 218.3 / 209.8 251.2 / 267.0 330.1 / 358.0	250 / 250 250 / 250 300 / 300 400 / 400
												1	10	30.8 / 28.0	— / — 78.9 / 90.0 157.7 / 182.0 236.6 / 273.0	— / — 36 / 36 72 / 72 108 / 108	249.1 / 237.8 249.1 / 237.8 289.7 / 302.0 368.6 / 393.0	300 / 300 300 / 300 350 / 350 400 / 450
													15	46.2 / 42.0	— / — 78.9 / 90.0 157.7 / 182.0 236.6 / 273.0	— / — 36 / 36 72 / 72 108 / 108	264.5 / 251.8 264.5 / 251.8 309.0 / 319.5 387.9 / 410.5	300 / 300 300 / 300 350 / 350 450 / 450
													20	59.4 / 54.0	— / — 78.9 / 90.0 157.7 / 182.0 236.6 / 273.0	— / — 36 / 36 72 / 72 108 / 108	277.7 / 263.8 277.7 / 265.0 325.5 / 334.5 404.4 / 425.5	350 / 300 350 / 300 350 / 350 450 / 450
													25	74.8 / 68.0	— / — 78.9 / 90.0 157.7 / 182.0 236.6 / 273.0	— / — 36 / 36 72 / 72 108 / 108	293.1 / 277.8 293.1 / 282.5 344.7 / 352.0 423.6 / 443.0	350 / 300 350 / 300 400 / 400 450 / 450

See page 169 for legend and notes.

Table 16 — Electrical Data — 50P035 with Optional Return Fan (cont)

380-3-60 (V-Ph-Hz)

VOLTAGE RANGE		COMPRESSOR						CONDENSER FAN MOTOR		EVAPORATOR FAN MOTOR		RETURN FAN			OPTIONAL ELECTRIC HEAT		POWER SUPPLY	
		No. A1			No. B1													
Min	Max	Qty	RLA (ea)	LRA (ea)	Qty	RLA (ea)	LRA (ea)	Qty	FLA	Hp	FLA	Qty	Hp (ea)	FLA (ea)	FLA	kW	MCA	FUSE OR HACR BRKR*
342	418	1	34	196	1	34	196	2	4.7 (ea)	7 1/2	12.5	—	—	—	—	—	98.4	125
															38.3	36	98.4	125
															76.8	72	98.4	125
															114.7	108	130.3	150
												1	10	16.7	—	—	115.1	125
															38.3	36	115.1	125
															76.8	72	115.1	125
															114.7	108	151.2	175
													15	24.5	—	—	122.9	150
															38.3	36	122.9	150
															76.8	72	123.1	150
															114.7	108	161.0	175
													20	30.0	—	—	128.4	150
															38.3	36	128.4	150
															76.8	72	129.9	150
															114.7	108	167.8	175
													25	38.0	—	—	137.4	175
															38.3	36	137.4	175
															76.8	72	139.9	175
															114.7	108	177.8	200
										10	16.7	—	—	—	—	—	102.6	125
															38.3	36	102.6	125
															76.8	72	102.6	125
															114.7	108	135.6	150
												1	10	16.7	—	—	119.3	150
															38.3	36	119.3	150
															76.8	72	119.3	150
															114.7	108	156.5	175
													15	24.5	—	—	127.1	150
															38.3	36	127.1	150
															76.8	72	128.3	150
															114.7	108	166.2	175
													20	30.0	—	—	132.6	150
															38.3	36	132.6	150
															76.8	72	135.2	150
															114.7	108	173.1	200
													25	38.0	—	—	141.6	175
															38.3	36	141.6	175
															76.8	72	145.2	175
															114.7	108	183.1	200
										15	24.5	—	—	—	—	—	110.4	125
															38.3	36	110.4	125
															76.8	72	110.4	125
															114.7	108	145.3	175
												1	10	16.7	—	—	127.1	150
															38.3	36	127.1	150
															76.8	72	128.3	150
															114.7	108	166.2	175
													15	24.5	—	—	134.9	150
															38.3	36	134.9	150
															76.8	72	138.1	150
															114.7	108	176.0	200
													20	30.0	—	—	140.4	150
															38.3	36	140.4	150
															76.8	72	144.9	150
															114.7	108	182.8	200
													25	38.0	—	—	149.4	175
															38.3	36	149.4	175
															76.8	72	154.9	175
															114.7	108	192.8	200

See page 169 for legend and notes.

Table 16 — Electrical Data — 50P035 with Optional Return Fan (cont)

380-3-60 (V-Ph-Hz) (cont)

VOLTAGE RANGE		COMPRESSOR						CONDENSER FAN MOTOR		EVAPORATOR FAN MOTOR		RETURN FAN			OPTIONAL ELECTRIC HEAT		POWER SUPPLY	
		No. A1			No. B1													
Min	Max	Qty	RLA (ea)	LRA (ea)	Qty	RLA (ea)	LRA (ea)	Qty	FLA	Hp	FLA	Qty	Hp (ea)	FLA (ea)	FLA	kW	MCA	FUSE OR HACR BRKR*
342	418	1	34	196	1	34	196	2	4.7 (ea)	20	30.0	—	—	—	—	—	115.9	125
															38.3	36	115.9	125
															76.8	72	115.9	125
															114.7	108	152.2	175
												1	10	16.7	—	—	132.6	150
															38.3	36	132.6	150
															76.8	72	135.2	150
															114.7	108	173.1	200
													15	24.5	—	—	140.4	150
															38.3	36	140.4	150
															76.8	72	144.9	150
															114.7	108	182.8	200
													20	30.0	—	—	145.9	175
															38.3	36	145.9	175
															76.8	72	151.8	175
															114.7	108	189.7	200
													25	38.0	—	—	154.9	175
															38.3	36	154.9	175
															76.8	72	161.8	175
															114.7	108	199.7	225
										25	38.0	—	—	—	—	—	124.9	150
															38.3	36	124.9	150
															76.8	72	124.9	150
															114.7	108	162.2	200
												1	10	16.7	—	—	141.6	175
															38.3	36	141.6	175
															76.8	72	145.2	175
															114.7	108	183.1	200
													15	24.5	—	—	149.4	175
															38.3	36	149.4	175
															76.8	72	154.9	175
															114.7	108	192.8	200
													20	30.0	—	—	154.9	175
															38.3	36	154.9	175
															76.8	72	161.8	175
															114.7	108	199.7	225
													25	38.0	—	—	162.9	200
															38.3	36	162.9	200
															76.8	72	171.8	200
															114.7	108	209.7	225

See page 169 for legend and notes.

Table 16 — Electrical Data — 50P035 with Optional Return Fan (cont)

460-3-60 (V-Ph-Hz)

VOLTAGE RANGE		COMPRESSOR						CONDENSER FAN MOTOR		EVAPORATOR FAN MOTOR		RETURN FAN			OPTIONAL ELECTRIC HEAT		POWER SUPPLY	
		No. A1			No. B1													
Min	Max	Qty	RLA (ea)	LRA (ea)	Qty	RLA (ea)	LRA (ea)	Qty	FLA	Hp	FLA	Qty	Hp (ea)	FLA (ea)	FLA	kW	MCA	FUSE OR HACR BRKR*
414	508	1	26.9	179	1	26.9	179	2	3.3 (ea)	7 1/2	11.0	—	—	—	—	—	78.1	100
															46.3	36	78.1	100
															93.0	72	106.8	125
															139.0	108	152.8	175
												1	10	14.0	—	—	92.1	110
															46.3	36	92.1	110
															93.0	72	124.3	150
															139.0	108	170.3	175
													15	21.0	—	—	99.1	125
															46.3	36	99.1	125
															93.0	72	133.0	150
															139.0	108	179.0	200
													20	27.0	—	—	105.2	125
															46.3	36	105.4	125
															93.0	72	140.5	150
															139.0	108	186.5	200
													25	34.0	—	—	113.9	125
															46.3	36	114.1	125
															93.0	72	149.3	175
															139.0	108	195.3	225
										10	14.0	—	—	—	—	—	81.1	100
															46.3	36	81.1	100
															93.0	72	110.5	125
															139.0	108	156.5	175
												1	10	14.0	—	—	95.1	110
															46.3	36	95.1	110
															93.0	72	128.0	150
															139.0	108	174.0	200
													15	21.0	—	—	102.1	125
															46.3	36	102.1	125
															93.0	72	136.8	150
															139.0	108	182.8	200
													20	27.0	—	—	108.2	125
															46.3	36	109.1	125
															93.0	72	144.3	150
															139.0	108	190.3	200
													25	34.0	—	—	116.9	150
															46.3	36	117.9	150
															93.0	72	153.0	175
															139.0	108	199.0	225
										15	21.0	—	—	—	—	—	88.1	110
															46.3	36	88.1	110
															93.0	72	119.3	125
															139.0	108	165.3	175
												1	10	14.0	—	—	102.1	125
															46.3	36	102.1	125
															93.0	72	136.8	150
															139.0	108	182.8	200
													15	21.0	—	—	109.1	125
															46.3	36	110.4	125
															93.0	72	145.5	150
															139.0	108	191.5	200
													20	27.0	—	—	115.2	125
															46.3	36	117.9	125
															93.0	72	153.0	175
															139.0	108	199.0	200
													25	34.0	—	—	123.9	150
															46.3	36	126.6	150
															93.0	72	161.8	175
															139.0	108	207.8	225

See page 169 for legend and notes.

Table 16 — Electrical Data — 50P035 with Optional Return Fan (cont)

460-3-60 (V-Ph-Hz) (cont)

VOLTAGE RANGE		COMPRESSOR						CONDENSER FAN MOTOR		EVAPORATOR FAN MOTOR		RETURN FAN			OPTIONAL ELECTRIC HEAT		POWER SUPPLY	
		No. A1			No. B1													
Min	Max	Qty	RLA (ea)	LRA (ea)	Qty	RLA (ea)	LRA (ea)	Qty	FLA	Hp	FLA	Qty	Hp (ea)	FLA (ea)	FLA	kW	MCA	FUSE OR HACR BRKR*
414	508	1	26.9	179	1	26.9	179	2	3.3 (ea)	20	27.0	—	—	—	—	—	94.2	110
															46.3	36	94.2	110
															93.0	72	126.8	150
															139.0	108	172.8	175
												1	10	14.0	—	—	108.2	125
															46.3	36	109.1	125
															93.0	72	144.3	150
															139.0	108	190.3	200
													15	21.0	—	—	115.2	125
															46.3	36	117.9	125
															93.0	72	153.0	175
															139.0	108	199.0	200
													20	27.0	—	—	121.2	125
															46.3	36	125.4	150
															93.0	72	160.5	175
															139.0	108	206.5	225
													25	34.0	—	—	129.9	150
															46.3	36	134.1	150
															93.0	72	169.3	175
															139.0	108	215.3	225
										25	34.0	—	—	—	—	—	102.9	125
															46.3	36	102.9	125
															93.0	72	135.5	150
															139.0	108	181.5	200
												1	10	14.0	—	—	116.9	150
															46.3	36	117.9	150
															93.0	72	153.0	175
															139.0	108	199.0	225
													15	21.0	—	—	123.9	150
															46.3	36	126.6	150
															93.0	72	161.8	175
															139.0	108	207.8	225
													20	27.0	—	—	129.9	150
															46.3	36	134.1	150
															93.0	72	169.3	175
															139.0	108	215.3	225
													25	34.0	—	—	136.9	150
															46.3	36	142.9	150
															93.0	72	178.0	200
															139.0	108	224.0	225

See page 169 for legend and notes.

Table 16 — Electrical Data — 50P035 with Optional Return Fan (cont)

575-3-60 (V-Ph-Hz)

VOLTAGE RANGE		COMPRESSOR						CONDENSER FAN MOTOR		EVAPORATOR FAN MOTOR		RETURN FAN			OPTIONAL ELECTRIC HEAT		POWER SUPPLY	
		No. A1			No. B1													
Min	Max	Qty	RLA (ea)	LRA (ea)	Qty	RLA (ea)	LRA (ea)	Qty	FLA	Hp	FLA	Qty	Hp (ea)	FLA (ea)	FLA	kW	MCA	FUSE OR HACR BRKR*
518	632	1	23.7	132	1	23.7	132	2	2.6 (ea)	7 1/2	9.0	—	—	—	—	—	67.5	90
															36.0	36	67.5	90
															72.0	72	83.3	110
															108.0	108	119.3	125
												1	10	11.0	—	—	78.5	100
															36.0	36	78.5	100
															72.0	72	97.0	110
															108.0	108	133.0	150
													15	17.0	—	—	84.5	100
															36.0	36	84.5	100
															72.0	72	104.5	125
															108.0	108	140.5	150
													20	22.0	—	—	89.5	110
															36.0	36	89.5	110
															72.0	72	110.8	125
															108.0	108	146.8	150
													25	27.0	—	—	95.4	110
															36.0	36	95.4	110
															72.0	72	117.0	125
															108.0	108	153.0	175
										10	11.0	—	—	—	—	—	69.5	90
															36.0	36	69.5	90
															72.0	72	85.8	110
															108.0	108	121.8	125
												1	10	11.0	—	—	80.5	100
															36.0	36	80.5	100
															72.0	72	99.5	110
															108.0	108	135.5	150
													15	17.0	—	—	86.5	110
															36.0	36	86.5	110
															72.0	72	107.0	125
															108.0	108	143.0	150
													20	22.0	—	—	91.5	110
															36.0	36	91.5	110
															72.0	72	113.3	125
															108.0	108	149.3	150
													25	27.0	—	—	97.4	110
															36.0	36	97.4	110
															72.0	72	119.5	125
															108.0	108	155.5	175
										15	17.0	—	—	—	—	—	75.5	90
															36.0	36	75.5	90
															72.0	72	93.3	110
															108.0	108	129.3	150
												1	10	11.0	—	—	86.5	110
															36.0	36	86.5	110
															72.0	72	107.0	125
															108.0	108	143.0	150
													15	17.0	—	—	92.5	110
															36.0	36	92.5	110
															72.0	72	114.5	125
															108.0	108	150.5	175
													20	22.0	—	—	97.5	110
															36.0	36	97.5	110
															72.0	72	120.8	125
															108.0	108	156.8	175
													25	27.0	—	—	103.4	125
															36.0	36	103.4	125
															72.0	72	127.0	150
															108.0	108	163.0	175

See page 169 for legend and notes.

Table 16 — Electrical Data — 50P035 with Optional Return Fan (cont)

575-3-60 (V-Ph-Hz) (cont)

VOLTAGE RANGE		COMPRESSOR						CONDENSER FAN MOTOR		EVAPORATOR FAN MOTOR		RETURN FAN			OPTIONAL ELECTRIC HEAT		POWER SUPPLY	
		No. A1			No. B1													
Min	Max	Qty	RLA (ea)	LRA (ea)	Qty	RLA (ea)	LRA (ea)	Qty	FLA	Hp	FLA	Qty	Hp (ea)	FLA (ea)	FLA	kW	MCA	FUSE OR HACR BRKR*
518	632	1	23.7	132	1	23.7	132	2	2.6 (ea)	20	22.0	—	—	—	—	—	80.5	100
															36.0	36	80.5	100
															72.0	72	99.5	110
															108.0	108	135.5	150
												1	10	11.0	—	—	91.5	110
															36.0	36	91.5	110
															72.0	72	113.3	125
															108.0	108	149.3	150
													15	17.0	—	—	97.5	110
															36.0	36	97.5	110
															72.0	72	120.8	125
															108.0	108	156.8	175
													20	22.0	—	—	102.5	125
															36.0	36	102.5	125
															72.0	72	127.0	150
															108.0	108	163.0	175
													25	27.0	—	—	108.4	125
															36.0	36	108.4	125
															72.0	72	133.3	150
															108.0	108	169.3	175
										25	27.0	—	—	—	—	—	86.4	110
															36.0	36	86.4	110
															72.0	72	105.8	125
															108.0	108	141.8	150
												1	10	11.0	—	—	97.4	110
															36.0	36	97.4	110
															72.0	72	119.5	125
															108.0	108	155.5	175
													15	17.0	—	—	103.4	125
															36.0	36	103.4	125
															72.0	72	127.0	150
															108.0	108	163.0	175
													20	22.0	—	—	108.4	125
															36.0	36	108.4	125
															72.0	72	133.3	150
															108.0	108	169.3	175
													25	27.0	—	—	113.4	125
															36.0	36	113.4	125
															72.0	72	139.5	150
															108.0	108	175.5	200

See page 169 for legend and notes.

Table 17 — Electrical Data — 50P 040 Units

208/230-3-60 (V-Ph-Hz)

VOLTAGE RANGE		COMPRESSOR						CONDENSER FAN MOTOR		EVAPORATOR FAN MOTOR		POWER EXHAUST			OPTIONAL ELECTRIC HEAT		POWER SUPPLY	
		No. A1			No. B1													
Min	Max	Qty	RLA (ea)	LRA (ea)	Qty	RLA (ea)	LRA (ea)	Qty	FLA	Hp	FLA	Qty	Hp (ea)	FLA (ea)	FLA	kW	MCA	FUSE OR HACR BRKR*
187	253	1	55.8	340	2	30.1	225	3	6.6 (ea)	7 1/2	24.2 / 22.0	—	—	— / —	— 78.9/ 90.0 157.7/ 182.0 236.6/ 273.0	— 36/ 36 72/ 72 108/ 108	174.0/ 171.8 174.0/ 171.8 188.0/ 209.5 266.9/ 300.5	225/ 225 225/ 225 250/ 250 300/ 350
												2	3	10.6 / 9.6	— 78.9/ 90.0 157.7/ 182.0 236.6/ 273.0	— 36/ 36 72/ 72 108/ 108	195.2/ 191.0 195.2/ 191.0 214.5/ 233.5 293.4/ 324.5	250/ 225 250/ 225 250/ 250 350/ 350
													5	16.7 / 15.2	— 78.9/ 90.0 157.7/ 182.0 236.6/ 273.0	— 36/ 36 72/ 72 108/ 108	207.4/ 202.2 207.4/ 202.2 229.7/ 247.5 308.6/ 338.5	250/ 250 250/ 250 250/ 300 350/ 350
													7.5	24.2 / 22.0	— 78.9/ 90.0 157.7/ 182.0 236.6/ 273.0	— 36/ 36 72/ 72 108/ 108	222.4/ 215.8 222.4/ 215.8 248.5/ 264.5 327.4/ 355.5	250/ 250 250/ 250 300/ 300 350/ 400
													10	30.8 / 28.0	— 78.9/ 90.0 157.7/ 182.0 236.6/ 273.0	— 36/ 36 72/ 72 108/ 108	235.6/ 227.8 235.6/ 227.8 265.0/ 279.5 343.9/ 370.5	250/ 250 250/ 250 300/ 300 350/ 400
										10	30.8 / 28.0	—	—	— / —	— 78.9/ 90.0 157.7/ 182.0 236.6/ 273.0	— 36/ 36 72/ 72 108/ 108	180.6/ 177.8 180.6/ 177.8 196.2/ 217.0 275.1/ 308.0	225/ 225 225/ 225 250/ 250 300/ 350
												2	3	10.6 / 9.6	— 78.9/ 90.0 157.7/ 182.0 236.6/ 273.0	— 36/ 36 72/ 72 108/ 108	201.8/ 197.0 201.8/ 197.0 222.7/ 241.0 301.6/ 332.0	250/ 250 250/ 250 250/ 250 350/ 350
													5	16.7 / 15.2	— 78.9/ 90.0 157.7/ 182.0 236.6/ 273.0	— 36/ 36 72/ 72 108/ 108	214.0/ 208.2 214.0/ 208.2 238.0/ 255.0 316.9/ 346.0	250/ 250 250/ 250 250/ 300 350/ 400
													7.5	24.2 / 22.0	— 78.9/ 90.0 157.7/ 182.0 236.6/ 273.0	— 36/ 36 72/ 72 108/ 108	229.0/ 221.8 229.0/ 221.8 256.7/ 272.0 335.6/ 363.0	250/ 250 250/ 250 300/ 300 350/ 400
													10	30.8 / 28.0	— 78.9/ 90.0 157.7/ 182.0 236.6/ 273.0	— 36/ 36 72/ 72 108/ 108	242.2/ 233.8 242.2/ 233.8 273.2/ 287.0 352.1/ 378.0	250/ 250 250/ 250 300/ 300 400/ 400
										15	46.2 / 42.0	—	—	— / —	— 78.9/ 90.0 157.7/ 182.0 236.6/ 273.0	— 36/ 36 72/ 72 108/ 108	196.0/ 191.8 196.0/ 191.8 215.5/ 234.5 294.4/ 325.5	250/ 225 250/ 225 250/ 250 350/ 350
												2	3	10.6 / 9.6	— 78.9/ 90.0 157.7/ 182.0 236.6/ 273.0	— 36/ 36 72/ 72 108/ 108	217.2/ 211.0 217.2/ 211.0 242.0/ 258.5 320.9/ 349.5	250/ 250 250/ 250 250/ 300 350/ 400
													5	16.7 / 15.2	— 78.9/ 90.0 157.7/ 182.0 236.6/ 273.0	— 36/ 36 72/ 72 108/ 108	229.4/ 222.2 229.4/ 222.2 257.2/ 272.5 336.1/ 363.5	250/ 250 250/ 250 300/ 300 350/ 400
													7.5	24.2 / 22.0	— 78.9/ 90.0 157.7/ 182.0 236.6/ 273.0	— 36/ 36 72/ 72 108/ 108	244.4/ 235.8 244.4/ 235.8 276.0/ 289.5 354.9/ 380.5	300/ 250 300/ 250 300/ 300 400/ 400
													10	30.8 / 28.0	— 78.9/ 90.0 157.7/ 182.0 236.6/ 273.0	— 36/ 36 72/ 72 108/ 108	257.6/ 247.8 257.6/ 247.8 292.5/ 304.5 371.4/ 395.5	300/ 300 300/ 300 300/ 350 400/ 400

See page 169 for legend and notes.

Table 17 — Electrical Data — 50P 040 Units (cont)

208/230-3-60 (V-Ph-Hz) (cont)

VOLTAGE RANGE		COMPRESSOR						CONDENSER FAN MOTOR		EVAPORATOR FAN MOTOR		POWER EXHAUST			OPTIONAL ELECTRIC HEAT		POWER SUPPLY	
		No. A1			No. B1													
Min	Max	Qty	RLA (ea)	LRA (ea)	Qty	RLA (ea)	LRA (ea)	Qty	FLA	Hp	FLA	Qty	Hp (ea)	FLA (ea)	FLA	kW	MCA	FUSE OR HACR BRKR*
187	253	1	55.8	340	2	30.1	225	3	6.6 (ea)	20	59.4 / 54.0	—	—	— / —	— 78.9/ 90.0 157.7/ 182.0 236.6/ 273.0	— 36/ 36 72/ 72 108/ 108	210.1/ 203.8 210.1/ 203.8 232.0/ 249.5 310.9/ 340.5	250/ 250 250/ 250 250/ 300 350/ 350
												2	3	10.6 / 9.6	— 78.9/ 90.0 157.7/ 182.0 236.6/ 273.0	— 36/ 36 72/ 72 108/ 108	231.3/ 223.0 231.3/ 223.0 258.5/ 273.5 337.4/ 364.5	250/ 250 250/ 250 300/ 300 350/ 400
													5	16.7 / 15.2	— 78.9/ 90.0 157.7/ 182.0 236.6/ 273.0	— 36/ 36 72/ 72 108/ 108	243.5/ 234.2 243.5/ 234.2 273.7/ 287.5 352.6/ 378.5	300/ 250 300/ 250 300/ 300 400/ 400
													7.5	24.2 / 22.0	— 78.9/ 90.0 157.7/ 182.0 236.6/ 273.0	— 36/ 36 72/ 72 108/ 108	258.5/ 247.8 258.5/ 247.8 292.5/ 304.5 371.4/ 395.5	300/ 300 300/ 300 300/ 350 400/ 400
													10	30.8 / 28.0	— 78.9/ 90.0 157.7/ 182.0 236.6/ 273.0	— 36/ 36 72/ 72 108/ 108	271.7/ 259.8 271.7/ 259.8 309.0/ 319.5 387.9/ 410.5	300/ 300 300/ 300 350/ 350 400/ 450
										25	74.8 / 68.0	—	—	— / —	— 78.9/ 90.0 157.7/ 182.0 236.6/ 273.0	— 36/ 36 72/ 72 108/ 108	229.3/ 220.8 229.3/ 220.8 251.2/ 267.0 330.1/ 358.0	300/ 250 300/ 250 300/ 300 400/ 400
												2	3	10.6 / 9.6	— 78.9/ 90.0 157.7/ 182.0 236.6/ 273.0	— 36/ 36 72/ 72 108/ 108	250.5/ 240.0 250.5/ 240.0 277.7/ 291.0 356.6/ 382.0	300/ 300 300/ 300 300/ 350 400/ 400
													5	16.7 / 15.2	— 78.9/ 90.0 157.7/ 182.0 236.6/ 273.0	— 36/ 36 72/ 72 108/ 108	262.7/ 251.2 262.7/ 251.2 293.0/ 305.0 371.9/ 396.0	300/ 300 300/ 300 350/ 350 400/ 450
													7.5	24.2 / 22.0	— 78.9/ 90.0 157.7/ 182.0 236.6/ 273.0	— 36/ 36 72/ 72 108/ 108	277.7/ 264.8 277.7/ 264.8 311.7/ 322.0 390.6/ 413.0	350/ 300 350/ 300 350/ 350 450/ 450
													10	30.8 / 28.0	— 78.9/ 90.0 157.7/ 182.0 236.6/ 273.0	— 36/ 36 72/ 72 108/ 108	290.9/ 276.8 290.9/ 276.8 328.2/ 337.0 407.1/ 428.0	350/ 300 350/ 300 350/ 350 450/ 450
										30	88.0 / 80.0	—	—	— / —	— 78.9/ 90.0 157.7/ 182.0 236.6/ 273.0	— 36/ 36 72/ 72 108/ 108	245.8/ 235.8 245.8/ 235.8 267.7/ 282.0 346.6/ 373.0	300/ 300 300/ 300 350/ 350 400/ 450
												2	3	10.6 / 9.6	— 78.9/ 90.0 157.7/ 182.0 236.6/ 273.0	— 36/ 36 72/ 72 108/ 108	267.0/ 255.0 267.0/ 255.0 294.2/ 306.0 373.1/ 397.0	350/ 300 350/ 300 350/ 350 450/ 450
													5	16.7 / 15.2	— 78.9/ 90.0 157.7/ 182.0 236.6/ 273.0	— 36/ 36 72/ 72 108/ 108	279.2/ 266.2 279.2/ 266.2 309.5/ 320.0 388.4/ 411.0	350/ 300 350/ 300 350/ 350 450/ 450
													7.5	24.2 / 22.0	— 78.9/ 90.0 157.7/ 182.0 236.6/ 273.0	— 36/ 36 72/ 72 108/ 108	294.2/ 279.8 294.2/ 279.8 328.2/ 337.0 407.1/ 428.0	350/ 350 350/ 350 400/ 400 450/ 450
													10	30.8 / 28.0	— 78.9/ 90.0 157.7/ 182.0 236.6/ 273.0	— 36/ 36 72/ 72 108/ 108	307.4/ 291.8 307.4/ 291.8 344.7/ 352.0 423.6/ 443.0	350/ 350 350/ 350 400/ 400 450/ 500

See page 169 for legend and notes.

Table 17 — Electrical Data — 50P 040 Units (cont)

380-3-60 (V-Ph-Hz)

VOLTAGE RANGE		COMPRESSOR						CONDENSER FAN MOTOR		EVAPORATOR FAN MOTOR		POWER EXHAUST			OPTIONAL ELECTRIC HEAT		POWER SUPPLY	
		No. A1			No. B1													
Min	Max	Qty	RLA (ea)	LRA (ea)	Qty	RLA (ea)	LRA (ea)	Qty	FLA	Hp	FLA	Qty	Hp (ea)	FLA (ea)	FLA	kW	MCA	FUSE OR HACR BRKR*
342	418	1	34	196	2	19.2	140	3	3.9 (ea)	7 1/2	12.5	—	—	—	—	—	105.1	125
															38.3	36	105.1	125
															76.8	72	105.1	125
															114.7	108	130.3	150
												2	3	4.0	—	—	113.1	125
															38.3	36	113.1	125
															76.8	72	113.1	125
															114.7	108	140.3	175
													5	9.1	—	—	123.3	150
															38.3	36	123.3	150
															76.8	72	123.3	150
															114.7	108	153.1	175
													7.5	12.5	—	—	130.1	150
															38.3	36	130.1	150
															76.8	72	130.1	150
															114.7	108	161.6	175
													10	16.7	—	—	138.5	150
															38.3	36	138.5	150
															76.8	72	138.5	150
															114.7	108	172.1	200
										10	16.7	—	—	—	—	—	109.3	125
															38.3	36	109.3	125
															76.8	72	109.3	125
															114.7	108	135.6	150
												2	3	4.0	—	—	117.3	150
															38.3	36	117.3	150
															76.8	72	117.3	150
															114.7	108	145.6	175
													5	9.1	—	—	127.5	150
															38.3	36	127.5	150
															76.8	72	127.5	150
															114.7	108	158.3	175
													7.5	12.5	—	—	134.3	150
															38.3	36	134.3	150
															76.8	72	134.3	150
															114.7	108	166.8	175
													10	16.7	—	—	142.7	175
															38.3	36	142.7	175
															76.8	72	142.7	175
															114.7	108	177.3	200
										15	24.5	—	—	—	—	—	117.1	150
															38.3	36	117.1	150
															76.8	72	117.1	150
															114.7	108	145.3	175
												2	3	4.0	—	—	125.1	150
															38.3	36	125.1	150
															76.8	72	125.1	150
															114.7	108	155.3	175
													5	9.1	—	—	135.3	150
															38.3	36	135.3	150
															76.8	72	135.3	150
															114.7	108	168.1	175
													7.5	12.5	—	—	142.1	175
															38.3	36	142.1	175
															76.8	72	142.1	175
															114.7	108	176.6	200
													10	16.7	—	—	150.5	175
															38.3	36	150.5	175
															76.8	72	150.5	175
															114.7	108	187.1	200

See page 169 for legend and notes.

Table 17 — Electrical Data — 50P 040 Units (cont)

380-3-60 (V-Ph-Hz) (cont)

VOLTAGE RANGE		COMPRESSOR						CONDENSER FAN MOTOR		EVAPORATOR FAN MOTOR		POWER EXHAUST			OPTIONAL ELECTRIC HEAT		POWER SUPPLY	
		No. A1			No. B1													
Min	Max	Qty	RLA (ea)	LRA (ea)	Qty	RLA (ea)	LRA (ea)	Qty	FLA	Hp	FLA	Qty	Hp (ea)	FLA (ea)	FLA	kW	MCA	FUSE OR HACR BRKR*
342	418	1	34	196	2	19.2	140	3	3.9 (ea)	20	30.0	—	—	—	—	—	122.6	150
															38.3	36	122.6	150
															76.8	72	122.6	150
															114.7	108	152.2	175
												2	3	4.0	—	—	130.6	150
															38.3	36	130.6	150
															76.8	72	130.6	150
															114.7	108	162.2	175
													5	9.1	—	—	140.8	150
															38.3	36	140.8	150
															76.8	72	140.8	150
															114.7	108	175.0	200
													7.5	12.5	—	—	147.6	175
															38.3	36	147.6	175
															76.8	72	147.6	175
															114.7	108	183.5	200
													10	16.7	—	—	156.0	175
															38.3	36	156.0	175
															76.8	72	156.1	175
															114.7	108	194.0	200
										25	38.0	—	—	—	—	—	131.6	150
															38.3	36	131.6	150
															76.8	72	131.6	150
															114.7	108	162.2	200
												2	3	4.0	—	—	139.6	175
															38.3	36	139.6	175
															76.8	72	139.6	175
															114.7	108	172.2	200
													5	9.1	—	—	149.8	175
															38.3	36	149.8	175
															76.8	72	149.8	175
															114.7	108	185.0	200
													7.5	12.5	—	—	156.6	175
															38.3	36	156.6	175
															76.8	72	156.6	175
															114.7	108	193.5	225
													10	16.7	—	—	165.0	200
															38.3	36	165.0	200
															76.8	72	166.1	200
															114.7	108	204.0	225
										30	43.5	—	—	—	—	—	138.5	175
															38.3	36	138.5	175
															76.8	72	138.5	175
															114.7	108	169.1	200
												2	3	4.0	—	—	146.5	175
															38.3	36	146.5	175
															76.8	72	146.5	175
															114.7	108	179.1	200
													5	9.1	—	—	156.7	200
															38.3	36	156.7	200
															76.8	72	156.7	200
															114.7	108	191.8	225
													7.5	12.5	—	—	163.5	200
															38.3	36	163.5	200
															76.8	72	163.5	200
															114.7	108	200.3	225
													10	16.7	—	—	171.9	200
															38.3	36	171.9	200
															76.8	72	172.9	200
															114.7	108	210.8	225

See page 169 for legend and notes.

Table 17 — Electrical Data — 50P 040 Units (cont)

460-3-60 (V-Ph-Hz)

VOLTAGE RANGE		COMPRESSOR						CONDENSER FAN MOTOR		EVAPORATOR FAN MOTOR		POWER EXHAUST			OPTIONAL ELECTRIC HEAT		POWER SUPPLY	
		No. A1			No. B1													
Min	Max	Qty	RLA (ea)	LRA (ea)	Qty	RLA (ea)	LRA (ea)	Qty	FLA	Hp	FLA	Qty	Hp (ea)	FLA (ea)	FLA	kW	MCA	FUSE OR HACR BRKR*
414	508	1	26.9	179	2	16.7	114	3	3.3 (ea)	7 1/2	11.0	—	—	—	—	—	87.9	110
															46.3	36	87.9	110
															93.0	72	106.8	125
															139.0	108	152.8	175
												2	3	4.8	—	—	97.5	110
															46.3	36	97.5	110
															93.0	72	118.8	125
															139.0	108	164.8	175
													5	7.6	—	—	103.1	125
															46.3	36	103.1	125
															93.0	72	125.8	150
															139.0	108	171.8	175
													7.5	11.0	—	—	109.9	125
															46.3	36	109.9	125
															93.0	72	134.3	150
															139.0	108	180.3	200
													10	14.0	—	—	115.9	125
															46.3	36	115.9	125
															93.0	72	141.8	150
															139.0	108	187.8	200
										10	14.0	—	—	—	—	—	90.9	110
															46.3	36	90.9	110
															93.0	72	110.5	125
															139.0	108	156.5	175
												2	3	4.8	—	—	100.5	125
															46.3	36	100.5	125
															93.0	72	122.5	150
															139.0	108	168.5	175
													5	7.6	—	—	106.1	125
															46.3	36	106.1	125
															93.0	72	129.5	150
															139.0	108	175.5	200
													7.5	11.0	—	—	112.9	125
															46.3	36	112.9	125
															93.0	72	138.0	150
															139.0	108	184.0	200
													10	14.0	—	—	118.9	125
															46.3	36	118.9	125
															93.0	72	145.5	150
															139.0	108	191.5	200
										15	21.0	—	—	—	—	—	97.9	110
															46.3	36	97.9	110
															93.0	72	119.3	125
															139.0	108	165.3	175
												2	3	4.8	—	—	107.5	125
															46.3	36	107.5	125
															93.0	72	131.3	150
															139.0	108	177.3	200
													5	7.6	—	—	113.1	125
															46.3	36	113.1	125
															93.0	72	138.3	150
															139.0	108	184.3	200
													7.5	11.0	—	—	119.9	125
															46.3	36	119.9	125
															93.0	72	146.8	150
															139.0	108	192.8	200
													10	14.0	—	—	125.9	150
															46.3	36	125.9	150
															93.0	72	154.3	175
															139.0	108	200.3	225

See page 169 for legend and notes.

Table 17 — Electrical Data — 50P 040 Units (cont)

460-3-60 (V-Ph-Hz) (cont)

VOLTAGE RANGE		COMPRESSOR						CONDENSER FAN MOTOR		EVAPORATOR FAN MOTOR		POWER EXHAUST			OPTIONAL ELECTRIC HEAT		POWER SUPPLY	
		No. A1			No. B1													
Min	Max	Qty	RLA (ea)	LRA (ea)	Qty	RLA (ea)	LRA (ea)	Qty	FLA	Hp	FLA	Qty	Hp (ea)	FLA (ea)	FLA	kW	MCA	FUSE OR HACR BRKR*
414	508	1	26.9	179	2	16.7	114	3	3.3 (ea)	20	27.0	—	—	—	—	—	104.0	125
															46.3	36	104.0	125
															93.0	72	126.8	150
															139.0	108	172.8	175
												2	3	4.8	—	—	113.6	125
															46.3	36	113.6	125
															93.0	72	138.8	150
															139.0	108	184.8	200
													5	7.6	—	—	119.2	125
															46.3	36	119.2	125
															93.0	72	145.8	150
															139.0	108	191.8	200
													7.5	11.0	—	—	126.0	150
															46.3	36	126.0	150
															93.0	72	154.3	175
															139.0	108	200.3	225
													10	14.0	—	—	132.0	150
															46.3	36	132.0	150
															93.0	72	161.8	175
															139.0	108	207.8	225
										25	34.0	—	—	—	—	—	112.7	125
															46.3	36	112.7	125
															93.0	72	135.5	150
															139.0	108	181.5	200
												2	3	4.8	—	—	122.3	150
															46.3	36	122.3	150
															93.0	72	147.5	175
															139.0	108	193.5	225
													5	7.6	—	—	127.9	150
															46.3	36	127.9	150
															93.0	72	154.5	175
															139.0	108	200.5	225
													7.5	11.0	—	—	134.7	150
															46.3	36	134.7	150
															93.0	72	163.0	175
															139.0	108	209.0	225
													10	14.0	—	—	140.7	150
															46.3	36	140.7	150
															93.0	72	170.5	175
															139.0	108	216.5	225
										30	40.0	—	—	—	—	—	120.2	150
															46.3	36	120.2	150
															93.0	72	143.0	175
															139.0	108	189.0	225
												2	3	4.8	—	—	129.8	150
															46.3	36	129.8	150
															93.0	72	155.0	175
															139.0	108	201.0	225
													5	7.6	—	—	135.4	175
															46.3	36	135.4	175
															93.0	72	162.0	175
															139.0	108	208.0	225
													7.5	11.0	—	—	142.2	175
															46.3	36	142.2	175
															93.0	72	170.5	200
															139.0	108	216.5	250
													10	14.0	—	—	148.2	175
															46.3	36	148.2	175
															93.0	72	178.0	200
															139.0	108	224.0	250

See page 169 for legend and notes.

Table 17 — Electrical Data — 50P 040 Units (cont)

575-3-60 (V-Ph-Hz)

VOLTAGE RANGE		COMPRESSOR						CONDENSER FAN MOTOR		EVAPORATOR FAN MOTOR		POWER EXHAUST			OPTIONAL ELECTRIC HEAT		POWER SUPPLY	
		No. A1			No. B1													
Min	Max	Qty	RLA (ea)	LRA (ea)	Qty	RLA (ea)	LRA (ea)	Qty	FLA	Hp	FLA	Qty	Hp (ea)	FLA (ea)	FLA	kW	MCA	FUSE OR HACR BRKR*
518	632	1	23.7	132	2	12.2	80	3	2.6 (ea)	7 1/2	9.0	—	—	—	—	—	70.8	90
															36.0	36	70.8	90
															72.0	72	83.3	110
															108.0	108	119.3	125
												2	3	3.9	—	—	78.6	100
															36.0	36	78.6	100
															72.0	72	93.0	110
															108.0	108	129.0	150
													5	6.1	—	—	83.0	100
															36.0	36	83.0	100
															72.0	72	98.5	110
															108.0	108	134.5	150
													7.5	9.0	—	—	88.8	110
															36.0	36	88.8	110
															72.0	72	105.8	125
															108.0	108	141.8	150
													10	11.0	—	—	92.8	110
															36.0	36	92.8	110
															72.0	72	110.8	125
															108.0	108	146.8	150
										10	11.0	—	—	—	—	—	72.8	90
															36.0	36	72.8	90
															72.0	72	85.8	110
															108.0	108	121.8	125
												2	3	3.9	—	—	80.6	100
															36.0	36	80.6	100
															72.0	72	95.5	110
															108.0	108	131.5	150
													5	6.1	—	—	85.0	100
															36.0	36	85.0	100
															72.0	72	101.0	110
															108.0	108	137.0	150
													7.5	9.0	—	—	90.8	110
															36.0	36	90.8	110
															72.0	72	108.3	125
															108.0	108	144.3	150
													10	11.0	—	—	94.8	110
															36.0	36	94.8	110
															72.0	72	113.3	125
															108.0	108	149.3	150
										15	17.0	—	—	—	—	—	78.8	100
															36.0	36	78.8	100
															72.0	72	93.3	110
															108.0	108	129.3	150
												2	3	3.9	—	—	86.6	110
															36.0	36	86.6	110
															72.0	72	103.0	125
															108.0	108	139.0	150
													5	6.1	—	—	91.0	110
															36.0	36	91.0	110
															72.0	72	108.5	125
															108.0	108	144.5	150
													7.5	9.0	—	—	96.8	110
															36.0	36	96.8	110
															72.0	72	115.8	125
															108.0	108	151.8	175
													10	11.0	—	—	100.8	110
															36.0	36	100.8	110
															72.0	72	120.8	125
															108.0	108	156.8	175

See page 169 for legend and notes.

Table 17 — Electrical Data — 50P 040 Units (cont)

575-3-60 (V-Ph-Hz) (cont)

VOLTAGE RANGE		COMPRESSOR						CONDENSER FAN MOTOR		EVAPORATOR FAN MOTOR		POWER EXHAUST			OPTIONAL ELECTRIC HEAT		POWER SUPPLY	
		No. A1			No. B1													
Min	Max	Qty	RLA (ea)	LRA (ea)	Qty	RLA (ea)	LRA (ea)	Qty	FLA	Hp	FLA	Qty	Hp (ea)	FLA (ea)	FLA	kW	MCA	FUSE OR HACR BRKR*
518	632	1	23.7	132	2	12.2	80	3	2.6 (ea)	20	22.0	—	—	—	—	—	83.8	100
															36.0	36	83.8	100
															72.0	72	99.5	110
															108.0	108	135.5	150
												2	3	3.9	—	—	91.6	110
															36.0	36	91.6	110
															72.0	72	109.3	125
															108.0	108	145.3	150
													5	6.1	—	—	96.0	110
															36.0	36	96.0	110
															72.0	72	114.8	125
															108.0	108	150.8	175
													7.5	9.0	—	—	101.8	125
															36.0	36	101.8	125
															72.0	72	122.0	125
															108.0	108	158.0	175
													10	11.0	—	—	105.8	125
															36.0	36	105.8	125
															72.0	72	127.0	150
															108.0	108	163.0	175
										25	27.0	—	—	—	—	—	89.7	110
															36.0	36	89.7	110
															72.0	72	105.8	125
															108.0	108	141.8	150
												2	3	3.9	—	—	97.5	110
															36.0	36	97.5	110
															72.0	72	115.5	125
															108.0	108	151.5	175
													5	6.1	—	—	101.9	125
															36.0	36	101.9	125
															72.0	72	121.0	125
															108.0	108	157.0	175
													7.5	9.0	—	—	107.7	125
															36.0	36	107.7	125
															72.0	72	128.3	150
															108.0	108	164.3	175
													10	11.0	—	—	111.7	125
															36.0	36	111.7	125
															72.0	72	133.3	150
															108.0	108	169.3	175
										30	32.0	—	—	—	—	—	95.9	125
															36.0	36	95.9	125
															72.0	72	112.0	125
															108.0	108	148.0	175
												2	3	3.9	—	—	103.7	125
															36.0	36	103.7	125
															72.0	72	121.8	150
															108.0	108	157.8	175
													5	6.1	—	—	108.1	125
															36.0	36	108.1	125
															72.0	72	127.3	150
															108.0	108	163.3	175
													7.5	9.0	—	—	113.9	125
															36.0	36	113.9	125
															72.0	72	134.5	150
															108.0	108	170.5	175
													10	11.0	—	—	117.9	125
															36.0	36	117.9	125
															72.0	72	139.5	150
															108.0	108	175.5	200

See page 169 for legend and notes.

Table 18 — Electrical Data — 50P040 Units with Optional Return Fan

208/230-3-60 (V-Ph-Hz)

VOLTAGE RANGE		COMPRESSOR						CONDENSER FAN MOTOR		EVAPORATOR FAN MOTOR		RETURN FAN			OPTIONAL ELECTRIC HEAT		POWER SUPPLY	
		No. A1			No. B1													
Min	Max	Qty	RLA (ea)	LRA (ea)	Qty	RLA (ea)	LRA (ea)	Qty	FLA	Hp	FLA	Qty	Hp (ea)	FLA (ea)	FLA	kW	MCA	FUSE OR HACR BRKR*
187	253	1	55.8	340	2	30.1	225	3	6.6 (ea)	7 1/2	24.2 / 22.0	—	—	— / —	— / — 78.9 / 90.0 157.7 / 182.0 236.6 / 273.0	— / — 36 / 36 72 / 72 108 / 108	174.0 / 171.8 174.0 / 171.8 188.0 / 209.5 266.9 / 300.5	225 / 225 225 / 225 250 / 250 300 / 350
												1	10	30.8 / 28.0	— / — 78.9 / 90.0 157.7 / 182.0 236.6 / 273.0	— / — 36 / 36 72 / 72 108 / 108	204.8 / 199.8 204.8 / 199.8 226.5 / 244.5 305.4 / 335.5	250 / 250 250 / 250 250 / 300 350 / 350
													15	46.2 / 42.0	— / — 78.9 / 90.0 157.7 / 182.0 236.6 / 273.0	— / — 36 / 36 72 / 72 108 / 108	220.2 / 213.8 220.2 / 213.8 245.7 / 262.0 324.6 / 353.0	250 / 250 250 / 250 250 / 300 350 / 400
													20	59.4 / 54.0	— / — 78.9 / 90.0 157.7 / 182.0 236.6 / 273.0	— / — 36 / 36 72 / 72 108 / 108	234.3 / 225.8 234.3 / 225.8 262.2 / 277.0 341.1 / 368.0	250 / 250 250 / 250 300 / 300 350 / 400
													25	74.8 / 68.0	— / — 78.9 / 90.0 157.7 / 182.0 236.6 / 273.0	— / — 36 / 36 72 / 72 108 / 108	253.5 / 242.8 253.5 / 242.8 281.5 / 294.5 360.4 / 385.5	300 / 300 300 / 300 350 / 350 400 / 400
										10	30.8 / 28.0	—	—	— / —	— / — 78.9 / 90.0 157.7 / 182.0 236.6 / 273.0	— / — 36 / 36 72 / 72 108 / 108	180.6 / 177.8 180.6 / 177.8 196.2 / 217.0 275.1 / 308.0	225 / 225 225 / 225 250 / 250 300 / 350
												1	10	30.8 / 28.0	— / — 78.9 / 90.0 157.7 / 182.0 236.6 / 273.0	— / — 36 / 36 72 / 72 108 / 108	211.4 / 205.8 211.4 / 205.8 234.7 / 252.0 313.6 / 343.0	250 / 250 250 / 250 250 / 300 350 / 350
													15	46.2 / 42.0	— / — 78.9 / 90.0 157.7 / 182.0 236.6 / 273.0	— / — 36 / 36 72 / 72 108 / 108	226.8 / 219.8 226.8 / 219.8 254.0 / 269.5 332.9 / 360.5	250 / 250 250 / 250 300 / 300 350 / 400
													20	59.4 / 54.0	— / — 78.9 / 90.0 157.7 / 182.0 236.6 / 273.0	— / — 36 / 36 72 / 72 108 / 108	240.9 / 231.8 240.9 / 231.8 270.5 / 284.5 349.4 / 375.5	300 / 250 300 / 250 300 / 300 400 / 400
													25	74.8 / 68.0	— / — 78.9 / 90.0 157.7 / 182.0 236.6 / 273.0	— / — 36 / 36 72 / 72 108 / 108	260.1 / 248.8 260.1 / 248.8 289.7 / 302.0 368.6 / 393.0	300 / 300 300 / 300 350 / 350 400 / 450
										15	46.2 / 42.0	—	—	— / —	— / — 78.9 / 90.0 157.7 / 182.0 236.6 / 273.0	— / — 36 / 36 72 / 72 108 / 108	196.0 / 191.8 196.0 / 191.8 215.5 / 234.5 294.4 / 325.5	250 / 225 250 / 225 250 / 250 350 / 350
												1	10	30.8 / 28.0	— / — 78.9 / 90.0 157.7 / 182.0 236.6 / 273.0	— / — 36 / 36 72 / 72 108 / 108	226.8 / 219.8 226.8 / 219.8 254.0 / 269.5 332.9 / 360.5	250 / 250 250 / 250 300 / 300 350 / 400
													15	46.2 / 42.0	— / — 78.9 / 90.0 157.7 / 182.0 236.6 / 273.0	— / — 36 / 36 72 / 72 108 / 108	242.2 / 233.8 242.2 / 233.8 273.2 / 287.0 352.1 / 378.0	250 / 250 250 / 250 300 / 300 400 / 400
													20	59.4 / 54.0	— / — 78.9 / 90.0 157.7 / 182.0 236.6 / 273.0	— / — 36 / 36 72 / 72 108 / 108	256.3 / 245.8 256.3 / 245.8 289.7 / 302.0 368.6 / 393.0	300 / 300 300 / 300 300 / 350 400 / 400
													25	74.8 / 68.0	— / — 78.9 / 90.0 157.7 / 182.0 236.6 / 273.0	— / — 36 / 36 72 / 72 108 / 108	275.5 / 262.8 275.5 / 262.8 309.0 / 319.5 387.9 / 410.5	350 / 300 350 / 300 350 / 350 450 / 450

See page 169 for legend and notes.

Table 18 — Electrical Data — 50P040 Units with Optional Return Fan (cont)

208/230-3-60 (V-Ph-Hz) (cont)

VOLTAGE RANGE		COMPRESSOR						CONDENSER FAN MOTOR		EVAPORATOR FAN MOTOR		RETURN FAN			OPTIONAL ELECTRIC HEAT		POWER SUPPLY	
		No. A1			No. B1													
Min	Max	Qty	RLA (ea)	LRA (ea)	Qty	RLA (ea)	LRA (ea)	Qty	FLA	Hp	FLA	Qty	Hp (ea)	FLA (ea)	FLA	kW	MCA	FUSE OR HACR BRKR*
187	253	1	55.8	340	2	30.1	225	3	6.6 (ea)	20	59.4 / 54.0	—	—	— / —	— / — 78.9 / 90.0 157.7 / 182.0 236.6 / 273.0	— / — 36 / 36 72 / 72 108 / 108	210.1 / 203.8 210.1 / 203.8 232.0 / 249.5 310.9 / 340.5	250 / 250 250 / 250 250 / 300 350 / 350
												1	10	30.8 / 28.0	— / — 78.9 / 90.0 157.7 / 182.0 236.6 / 273.0	— / — 36 / 36 72 / 72 108 / 108	240.9 / 231.8 240.9 / 231.8 270.5 / 284.5 349.4 / 375.5	300 / 250 300 / 250 300 / 300 400 / 400
													15	46.2 / 42.0	— / — 78.9 / 90.0 157.7 / 182.0 236.6 / 273.0	— / — 36 / 36 72 / 72 108 / 108	256.3 / 245.8 256.3 / 245.8 289.7 / 302.0 368.6 / 393.0	300 / 300 300 / 300 300 / 350 400 / 400
													20	59.4 / 54.0	— / — 78.9 / 90.0 157.7 / 182.0 236.6 / 273.0	— / — 36 / 36 72 / 72 108 / 108	269.5 / 257.8 269.5 / 257.8 306.2 / 317.0 385.1 / 408.0	300 / 300 300 / 300 350 / 350 400 / 450
													25	74.8 / 68.0	— / — 78.9 / 90.0 157.7 / 182.0 236.6 / 273.0	— / — 36 / 36 72 / 72 108 / 108	288.7 / 274.8 288.7 / 274.8 325.5 / 334.5 404.4 / 425.5	350 / 300 350 / 300 350 / 350 450 / 450
										25	74.8 / 68.0	—	—	— / —	— / — 78.9 / 90.0 157.7 / 182.0 236.6 / 273.0	— / — 36 / 36 72 / 72 108 / 108	229.3 / 220.8 229.3 / 220.8 251.2 / 267.0 330.1 / 358.0	300 / 250 300 / 250 300 / 300 400 / 400
												1	10	30.8 / 28.0	— / — 78.9 / 90.0 157.7 / 182.0 236.6 / 273.0	— / — 36 / 36 72 / 72 108 / 108	260.1 / 248.8 260.1 / 248.8 289.7 / 302.0 368.6 / 393.0	300 / 300 300 / 300 350 / 350 400 / 450
													15	46.2 / 42.0	— / — 78.9 / 90.0 157.7 / 182.0 236.6 / 273.0	— / — 36 / 36 72 / 72 108 / 108	275.5 / 262.8 275.5 / 262.8 309.0 / 319.5 387.9 / 410.5	350 / 300 350 / 300 350 / 350 450 / 450
													20	59.4 / 54.0	— / — 78.9 / 90.0 157.7 / 182.0 236.6 / 273.0	— / — 36 / 36 72 / 72 108 / 108	288.7 / 274.8 288.7 / 274.8 325.5 / 334.5 404.4 / 425.5	350 / 300 350 / 300 350 / 350 450 / 450
													25	74.8 / 68.0	— / — 78.9 / 90.0 157.7 / 182.0 236.6 / 273.0	— / — 36 / 36 72 / 72 108 / 108	304.1 / 288.8 304.1 / 288.8 344.7 / 352.0 423.6 / 443.0	350 / 350 350 / 350 400 / 400 450 / 450
										30	88.0 / 80.0	—	—	— / —	— / — 78.9 / 90.0 157.7 / 182.0 236.6 / 273.0	— / — 36 / 36 72 / 72 108 / 108	245.8 / 235.8 245.8 / 235.8 267.7 / 282.0 346.6 / 373.0	300 / 300 300 / 300 350 / 350 400 / 450
												1	10	30.8 / 28.0	— / — 78.9 / 90.0 157.7 / 182.0 236.6 / 273.0	— / — 36 / 36 72 / 72 108 / 108	276.6 / 263.8 276.6 / 263.8 306.2 / 317.0 385.1 / 408.0	350 / 300 350 / 300 350 / 350 450 / 450
													15	46.2 / 42.0	— / — 78.9 / 90.0 157.7 / 182.0 236.6 / 273.0	— / — 36 / 36 72 / 72 108 / 108	292.0 / 277.8 292.0 / 277.8 325.5 / 334.5 404.4 / 425.5	350 / 350 350 / 350 400 / 400 450 / 450
													20	59.4 / 54.0	— / — 78.9 / 90.0 157.7 / 182.0 236.6 / 273.0	— / — 36 / 36 72 / 72 108 / 108	305.2 / 289.8 305.2 / 289.8 342.0 / 349.5 420.9 / 440.5	350 / 350 350 / 350 400 / 400 450 / 500
													25	74.8 / 68.0	— / — 78.9 / 90.0 157.7 / 182.0 236.6 / 273.0	— / — 36 / 36 72 / 72 108 / 108	320.6 / 303.8 320.6 / 303.8 361.2 / 367.0 440.1 / 458.0	400 / 350 400 / 350 400 / 400 500 / 500

See page 169 for legend and notes.

Table 18 — Electrical Data — 50P040 Units with Optional Return Fan (cont)

380-3-60 (V-Ph-Hz)

VOLTAGE RANGE		COMPRESSOR						CONDENSER FAN MOTOR		EVAPORATOR FAN MOTOR		RETURN FAN			OPTIONAL ELECTRIC HEAT		POWER SUPPLY	
		No. A1			No. B1													
Min	Max	Qty	RLA (ea)	LRA (ea)	Qty	RLA (ea)	LRA (ea)	Qty	FLA	Hp	FLA	Qty	Hp (ea)	FLA (ea)	FLA	kW	MCA	FUSE OR HACR BRKR*
342	418	1	34	196	2	19.2	140	3	3.9 (ea)	7 1/2	12.5	—	—	—	—	—	105.1	125
															38.3	36	105.1	125
															76.8	72	105.1	125
															114.7	108	130.3	150
												1	10	16.7	—	—	121.8	150
															38.3	36	121.8	150
															76.8	72	121.8	150
															114.7	108	151.2	175
													15	24.5	—	—	129.6	150
															38.3	36	129.6	150
															76.8	72	129.6	150
															114.7	108	161.0	175
													20	30	—	—	135.1	150
															38.3	36	135.1	150
															76.8	72	135.1	150
															114.7	108	167.8	175
													25	38	—	—	144.1	175
															38.3	36	144.1	175
															76.8	72	144.1	175
															114.7	108	177.8	200
										10	16.7	—	—	—	—	—	109.3	125
															38.3	36	109.3	125
															76.8	72	109.3	125
															114.7	108	135.6	150
												1	10	16.7	—	—	126.0	150
															38.3	36	126.0	150
															76.8	72	126.0	150
															114.7	108	156.5	175
													15	24.5	—	—	133.8	150
															38.3	36	133.8	150
															76.8	72	133.8	150
															114.7	108	166.2	175
													20	30	—	—	139.3	150
															38.3	36	139.3	150
															76.8	72	139.3	150
															114.7	108	173.1	200
													25	38	—	—	148.3	175
															38.3	36	148.3	175
															76.8	72	148.3	175
															114.7	108	183.1	200
										15	24.5	—	—	—	—	—	117.1	150
															38.3	36	117.1	150
															76.8	72	117.1	150
															114.7	108	145.3	175
												1	10	16.7	—	—	133.8	150
															38.3	36	133.8	150
															76.8	72	133.8	150
															114.7	108	166.2	175
													15	24.5	—	—	141.6	175
															38.3	36	141.6	175
															76.8	72	141.6	175
															114.7	108	176.0	200
													20	30	—	—	147.1	175
															38.3	36	147.1	175
															76.8	72	147.1	175
															114.7	108	182.8	200
													25	38	—	—	156.1	175
															38.3	36	156.1	175
															76.8	72	156.1	175
															114.7	108	192.8	200

See page 169 for legend and notes.

Table 18 — Electrical Data — 50P040 Units with Optional Return Fan (cont)

380-3-60 (V-Ph-Hz) (cont)

VOLTAGE RANGE		COMPRESSOR						CONDENSER FAN MOTOR		EVAPORATOR FAN MOTOR		RETURN FAN			OPTIONAL ELECTRIC HEAT		POWER SUPPLY	
		No. A1			No. B1													
Min	Max	Qty	RLA (ea)	LRA (ea)	Qty	RLA (ea)	LRA (ea)	Qty	FLA	Hp	FLA	Qty	Hp (ea)	FLA (ea)	FLA	kW	MCA	FUSE OR HACR BRKR*
342	418	1	34	196	2	19.2	140	3	3.9 (ea)	20	30.0	—	—	—	—	—	122.6	150
															38.3	36	122.6	150
															76.8	72	122.6	150
															114.7	108	152.2	175
												1	10	16.7	—	—	139.3	150
															38.3	36	139.3	150
															76.8	72	139.3	150
															114.7	108	173.1	200
													15	24.5	—	—	147.1	175
															38.3	36	147.1	175
															76.8	72	147.1	175
															114.7	108	182.8	200
													20	30	—	—	152.6	175
															38.3	36	152.6	175
															76.8	72	152.6	175
															114.7	108	189.7	200
													25	38	—	—	161.6	175
															38.3	36	161.6	175
															76.8	72	161.8	175
															114.7	108	199.7	225
										25	38.0	—	—	—	—	—	131.6	150
															38.3	36	131.6	150
															76.8	72	131.6	150
															114.7	108	162.2	200
												1	10	16.7	—	—	148.3	175
															38.3	36	148.3	175
															76.8	72	148.3	175
															114.7	108	183.1	200
													15	24.5	—	—	156.1	175
															38.3	36	156.1	175
															76.8	72	156.1	175
															114.7	108	192.8	200
													20	30	—	—	161.6	175
															38.3	36	161.6	175
															76.8	72	161.8	175
															114.7	108	199.7	225
													25	38	—	—	169.6	200
															38.3	36	169.6	200
															76.8	72	171.8	200
															114.7	108	209.7	225
										30	43.5	—	—	—	—	—	138.5	175
															38.3	36	138.5	175
															76.8	72	138.5	175
															114.7	108	169.1	200
												1	10	16.7	—	—	155.2	175
															38.3	36	155.2	175
															76.8	72	155.2	175
															114.7	108	190.0	225
													15	24.5	—	—	163.0	200
															38.3	36	163.0	200
															76.8	72	163.0	200
															114.7	108	199.7	225
													20	30	—	—	168.5	200
															38.3	36	168.5	200
															76.8	72	168.7	200
															114.7	108	206.6	225
													25	38	—	—	176.5	200
															38.3	36	176.5	200
															76.8	72	178.7	200
															114.7	108	216.6	250

See page 169 for legend and notes.

Table 18 — Electrical Data — 50P040 Units with Optional Return Fan (cont)

460-3-60 (V-Ph-Hz)

VOLTAGE RANGE		COMPRESSOR						CONDENSER FAN MOTOR		EVAPORATOR FAN MOTOR		RETURN FAN			OPTIONAL ELECTRIC HEAT		POWER SUPPLY	
		No. A1			No. B1													
Min	Max	Qty	RLA (ea)	LRA (ea)	Qty	RLA (ea)	LRA (ea)	Qty	FLA	Hp	FLA	Qty	Hp (ea)	FLA (ea)	FLA	kW	MCA	FUSE OR HACR BRKR*
414	508	1	26.9	179	2	16.7	114	3	3.3 (ea)	7 1/2	11.0	—	—	—	—	—	87.9	110
															46.3	36	87.9	110
															93.0	72	106.8	125
															139.0	108	152.8	175
												1	10	14	—	—	101.9	125
															46.3	36	101.9	125
															93.0	72	124.3	150
															139.0	108	170.3	175
													15	21	—	—	108.9	125
															46.3	36	108.9	125
															93.0	72	133.0	150
															139.0	108	179.0	200
													20	27	—	—	115.0	125
															46.3	36	115.0	125
															93.0	72	140.5	150
															139.0	108	186.5	200
													25	34	—	—	123.7	150
															46.3	36	123.7	150
															93.0	72	149.3	175
															139.0	108	195.3	225
										10	14.0	—	—	—	—	—	90.9	110
															46.3	36	90.9	110
															93.0	72	110.5	125
															139.0	108	156.5	175
												1	10	14	—	—	104.9	125
															46.3	36	104.9	125
															93.0	72	128.0	150
															139.0	108	174.0	200
													15	21	—	—	111.9	125
															46.3	36	111.9	125
															93.0	72	136.8	150
															139.0	108	182.8	200
													20	27	—	—	118.0	125
															46.3	36	118.0	125
															93.0	72	144.3	150
															139.0	108	190.3	200
													25	34	—	—	126.7	150
															46.3	36	126.7	150
															93.0	72	153.0	175
															139.0	108	199.0	225
										15	21.0	—	—	—	—	—	97.9	110
															46.3	36	97.9	110
															93.0	72	119.3	125
															139.0	108	165.3	175
												1	10	14	—	—	111.9	125
															46.3	36	111.9	125
															93.0	72	136.8	150
															139.0	108	182.8	200
													15	21	—	—	118.9	125
															46.3	36	118.9	125
															93.0	72	145.5	150
															139.0	108	191.5	200
													20	27	—	—	125.0	150
															46.3	36	125.0	150
															93.0	72	153.0	175
															139.0	108	199.0	200
													25	34	—	—	133.7	150
															46.3	36	133.7	150
															93.0	72	161.8	175
															139.0	108	207.8	225

See page 169 for legend and notes.

Table 18 — Electrical Data — 50P040 Units with Optional Return Fan (cont)

460-3-60 (V-Ph-Hz) (cont)

VOLTAGE RANGE		COMPRESSOR						CONDENSER FAN MOTOR		EVAPORATOR FAN MOTOR		RETURN FAN			OPTIONAL ELECTRIC HEAT		POWER SUPPLY	
		No. A1			No. B1													
Min	Max	Qty	RLA (ea)	LRA (ea)	Qty	RLA (ea)	LRA (ea)	Qty	FLA	Hp	FLA	Qty	Hp (ea)	FLA (ea)	FLA	kW	MCA	FUSE OR HACR BRKR*
414	508	1	26.9	179	2	16.7	114	3	3.3 (ea)	20	27.0	—	—	—	—	—	104.0	125
															46.3	36	104.0	125
															93.0	72	126.8	150
															139.0	108	172.8	175
												1	10	14	—	—	118.0	125
															46.3	36	118.0	125
															93.0	72	144.3	150
															139.0	108	190.3	200
													15	21	—	—	125.0	150
															46.3	36	125.0	150
															93.0	72	153.0	175
															139.0	108	199.0	200
													20	27	—	—	131.0	150
															46.3	36	131.0	150
															93.0	72	160.5	175
															139.0	108	206.5	225
													25	34	—	—	139.7	150
															46.3	36	139.7	150
															93.0	72	169.3	175
															139.0	108	215.3	225
										25	34.0	—	—	—	—	—	112.7	125
															46.3	36	112.7	125
															93.0	72	135.5	150
															139.0	108	181.5	200
												1	10	14	—	—	126.7	150
															46.3	36	126.7	150
															93.0	72	153.0	175
															139.0	108	199.0	225
													15	21	—	—	133.7	150
															46.3	36	133.7	150
															93.0	72	161.8	175
															139.0	108	207.8	225
													20	27	—	—	139.7	150
															46.3	36	139.7	150
															93.0	72	169.3	175
															139.0	108	215.3	225
													25	34	—	—	146.7	175
															46.3	36	146.7	175
															93.0	72	178.0	200
															139.0	108	224.0	225
										30	40.0	—	—	—	—	—	120.2	150
															46.3	36	120.2	150
															93.0	72	143.0	175
															139.0	108	189.0	225
												1	10	14	—	—	134.2	150
															46.3	36	134.2	150
															93.0	72	160.5	175
															139.0	108	206.5	225
													15	21	—	—	141.2	175
															46.3	36	141.2	175
															93.0	72	169.3	200
															139.0	108	215.3	250
													20	27	—	—	147.2	175
															46.3	36	147.2	175
															93.0	72	176.8	200
															139.0	108	222.8	250
													25	34	—	—	154.2	175
															46.3	36	154.2	175
															93.0	72	185.5	200
															139.0	108	231.5	250

See page 169 for legend and notes.

Table 18 — Electrical Data — 50P040 Units with Optional Return Fan (cont)

575-3-60 (V-Ph-Hz)

VOLTAGE RANGE		COMPRESSOR						CONDENSER FAN MOTOR		EVAPORATOR FAN MOTOR		RETURN FAN			OPTIONAL ELECTRIC HEAT		POWER SUPPLY	
		No. A1			No. B1													
Min	Max	Qty	RLA (ea)	LRA (ea)	Qty	RLA (ea)	LRA (ea)	Qty	FLA	Hp	FLA	Qty	Hp (ea)	FLA (ea)	FLA	kW	MCA	FUSE OR HACR BRKR*
518	632	1	23.7	132	2	12.2	80	3	2.6 (ea)	7 1/2	9.0	—	—	—	—	—	70.8	90
															36.0	36	70.8	90
															72.0	72	83.3	110
															108.0	108	119.3	125
												1	10	11	—	—	81.8	100
															36.0	36	81.8	100
															72.0	72	97.0	110
															108.0	108	133.0	150
													15	17	—	—	87.8	110
															36.0	36	87.8	110
															72.0	72	104.5	125
															108.0	108	140.5	150
													20	22	—	—	92.8	110
															36.0	36	92.8	110
															72.0	72	110.8	125
															108.0	108	146.8	150
													25	27	—	—	98.7	125
															36.0	36	98.7	125
															72.0	72	117.0	125
															108.0	108	153.0	175
										10	11.0	—	—	—	—	—	72.8	90
															36.0	36	72.8	90
															72.0	72	85.8	110
															108.0	108	121.8	125
												1	10	11	—	—	83.8	100
															36.0	36	83.8	100
															72.0	72	99.5	110
															108.0	108	135.5	150
													15	17	—	—	89.8	110
															36.0	36	89.8	110
															72.0	72	107.0	125
															108.0	108	143.0	150
													20	22	—	—	94.8	110
															36.0	36	94.8	110
															72.0	72	113.3	125
															108.0	108	149.3	150
													25	27	—	—	100.7	125
															36.0	36	100.7	125
															72.0	72	119.5	125
															108.0	108	155.5	175
										15	17.0	—	—	—	—	—	78.8	100
															36.0	36	78.8	100
															72.0	72	93.3	110
															108.0	108	129.3	150
												1	10	11	—	—	89.8	110
															36.0	36	89.8	110
															72.0	72	107.0	125
															108.0	108	143.0	150
													15	17	—	—	95.8	110
															36.0	36	95.8	110
															72.0	72	114.5	125
															108.0	108	150.5	175
													20	22	—	—	100.8	110
															36.0	36	100.8	110
															72.0	72	120.8	125
															108.0	108	156.8	175
													25	27	—	—	106.7	125
															36.0	36	106.7	125
															72.0	72	127.0	150
															108.0	108	163.0	175

See page 169 for legend and notes.

Table 18 — Electrical Data — 50P040 Units with Optional Return Fan (cont)

575-3-60 (V-Ph-Hz) (cont)

VOLTAGE RANGE		COMPRESSOR						CONDENSER FAN MOTOR		EVAPORATOR FAN MOTOR		RETURN FAN			OPTIONAL ELECTRIC HEAT		POWER SUPPLY	
		No. A1			No. B1													
Min	Max	Qty	RLA (ea)	LRA (ea)	Qty	RLA (ea)	LRA (ea)	Qty	FLA	Hp	FLA	Qty	Hp (ea)	FLA (ea)	FLA	kW	MCA	FUSE OR HACR BRKR*
518	632	1	23.7	132	2	12.2	80	3	2.6 (ea)	20	22.0	—	—	—	—	—	83.8	100
															36.0	36	83.8	100
															72.0	72	99.5	110
															108.0	108	135.5	150
												1	10	11	—	—	94.8	110
															36.0	36	94.8	110
															72.0	72	113.3	125
															108.0	108	149.3	150
													15	17	—	—	100.8	110
															36.0	36	100.8	110
															72.0	72	120.8	125
															108.0	108	156.8	175
													20	22	—	—	105.8	125
															36.0	36	105.8	125
															72.0	72	127.0	150
															108.0	108	163.0	175
													25	27	—	—	111.7	125
															36.0	36	111.7	125
															72.0	72	133.3	150
															108.0	108	169.3	175
										25	27.0	—	—	—	—	—	89.7	110
															36.0	36	89.7	110
															72.0	72	105.8	125
															108.0	108	141.8	150
												1	10	11	—	—	100.7	125
															36.0	36	100.7	125
															72.0	72	119.5	125
															108.0	108	155.5	175
													15	17	—	—	106.7	125
															36.0	36	106.7	125
															72.0	72	127.0	150
															108.0	108	163.0	175
													20	22	—	—	111.7	125
															36.0	36	111.7	125
															72.0	72	133.3	150
															108.0	108	169.3	175
													25	27	—	—	116.7	125
															36.0	36	116.7	125
															72.0	72	139.5	150
															108.0	108	175.5	200
										30	32.0	—	—	—	—	—	95.9	125
															36.0	36	95.9	125
															72.0	72	112.0	125
															108.0	108	148.0	175
												1	10	11	—	—	106.9	125
															36.0	36	106.9	125
															72.0	72	125.8	150
															108.0	108	161.8	175
													15	17	—	—	112.9	125
															36.0	36	112.9	125
															72.0	72	133.3	150
															108.0	108	169.3	175
													20	22	—	—	117.9	125
															36.0	36	117.9	125
															72.0	72	139.5	150
															108.0	108	175.5	200
													25	27	—	—	122.9	150
															36.0	36	122.9	150
															72.0	72	145.8	150
															108.0	108	181.8	200

See page 169 for legend and notes.

Table 19 — Electrical Data — 50P 050 Units

208/230-3-60 (V-Ph-Hz)

VOLTAGE RANGE		COMPRESSOR						CONDENSER FAN MOTOR		EVAPORATOR FAN MOTOR		POWER EXHAUST			OPTIONAL ELECTRIC HEAT		POWER SUPPLY	
		No. A1			No. B1													
Min	Max	Qty	RLA (ea)	LRA (ea)	Qty	RLA (ea)	LRA (ea)	Qty	FLA	Hp	FLA	Qty	Hp (ea)	FLA (ea)	FLA	kW	MCA	FUSE OR HACR BRKR*
187	253	2	33.3	239	2	48.1	245	4	6.6 (ea)	7 1/2	24.2 / 22.0	—	—	— / —	— 78.9/ 90.0 157.7/ 182.0 236.6/ 273.0	— 36/ 36 72/ 72 108/ 108	225.4/ 223.2 225.4/ 223.2 225.4/ 223.2 266.9/ 300.5	250/ 250 250/ 250 250/ 250 300/ 350
												2	3	10.6 / 9.6	— 78.9/ 90.0 157.7/ 182.0 236.6/ 273.0	— 36/ 36 72/ 72 108/ 108	246.6/ 242.4 246.6/ 242.4 246.6/ 242.4 293.4/ 324.5	250/ 250 250/ 250 250/ 250 300/ 350
													5	16.7 / 15.2	— 78.9/ 90.0 157.7/ 182.0 236.6/ 273.0	— 36/ 36 72/ 72 108/ 108	258.8/ 253.6 258.8/ 253.6 258.8/ 253.6 308.6/ 338.5	300/ 300 300/ 300 300/ 300 350/ 350
													7.5	24.2 / 22.0	— 78.9/ 90.0 157.7/ 182.0 236.6/ 273.0	— 36/ 36 72/ 72 108/ 108	273.8/ 267.2 273.8/ 267.2 273.8/ 267.2 327.4/ 355.5	300/ 300 300/ 300 300/ 300 350/ 400
													10	30.8 / 28.0	— 78.9/ 90.0 157.7/ 182.0 236.6/ 273.0	— 36/ 36 72/ 72 108/ 108	287.0/ 279.2 287.0/ 279.2 287.0/ 279.5 343.9/ 370.5	300/ 300 300/ 300 300/ 300 350/ 400
										10	30.8 / 28.0	—	—	— / —	— 78.9/ 90.0 157.7/ 182.0 236.6/ 273.0	— 36/ 36 72/ 72 108/ 108	232.0/ 229.2 232.0/ 229.2 232.0/ 229.2 275.1/ 308.0	250/ 250 250/ 250 250/ 250 300/ 350
												2	3	10.6 / 9.6	— 78.9/ 90.0 157.7/ 182.0 236.6/ 273.0	— 36/ 36 72/ 72 108/ 108	253.2/ 248.4 253.2/ 248.4 253.2/ 248.4 301.6/ 332.0	300/ 250 300/ 250 300/ 250 350/ 350
													5	16.7 / 15.2	— 78.9/ 90.0 157.7/ 182.0 236.6/ 273.0	— 36/ 36 72/ 72 108/ 108	265.4/ 259.6 265.4/ 259.6 265.4/ 259.6 316.9/ 346.0	300/ 300 300/ 300 300/ 300 350/ 350
													7.5	24.2 / 22.0	— 78.9/ 90.0 157.7/ 182.0 236.6/ 273.0	— 36/ 36 72/ 72 108/ 108	280.4/ 273.2 280.4/ 273.2 280.4/ 273.2 335.6/ 363.0	300/ 300 300/ 300 300/ 300 350/ 400
													10	30.8 / 28.0	— 78.9/ 90.0 157.7/ 182.0 236.6/ 273.0	— 36/ 36 72/ 72 108/ 108	293.6/ 285.2 293.6/ 285.2 293.6/ 287.0 352.1/ 378.0	300/ 300 300/ 300 300/ 300 400/ 400
										15	46.2 / 42.0	—	—	— / —	— 78.9/ 90.0 157.7/ 182.0 236.6/ 273.0	— 36/ 36 72/ 72 108/ 108	247.4/ 243.2 247.4/ 243.2 247.4/ 243.2 294.4/ 325.5	250/ 250 250/ 250 250/ 250 300/ 350
												2	3	10.6 / 9.6	— 78.9/ 90.0 157.7/ 182.0 236.6/ 273.0	— 36/ 36 72/ 72 108/ 108	268.6/ 262.4 268.6/ 262.4 268.6/ 262.4 320.9/ 349.5	300/ 300 300/ 300 300/ 300 350/ 350
													5	16.7 / 15.2	— 78.9/ 90.0 157.7/ 182.0 236.6/ 273.0	— 36/ 36 72/ 72 108/ 108	280.8/ 273.6 280.8/ 273.6 280.8/ 273.6 336.1/ 363.5	300/ 300 300/ 300 300/ 300 350/ 400
													7.5	24.2 / 22.0	— 78.9/ 90.0 157.7/ 182.0 236.6/ 273.0	— 36/ 36 72/ 72 108/ 108	295.8/ 287.2 295.8/ 287.2 295.8/ 289.5 354.9/ 380.5	300/ 300 300/ 300 300/ 300 400/ 400
													10	30.8 / 28.0	— 78.9/ 90.0 157.7/ 182.0 236.6/ 273.0	— 36/ 36 72/ 72 108/ 108	309.0/ 299.2 309.0/ 299.2 309.0/ 304.5 371.4/ 395.5	350/ 300 350/ 300 350/ 350 400/ 400

See page 169 for legend and notes.

Table 19 — Electrical Data — 50P 050 Units (cont)

208/230-3-60 (V-Ph-Hz) (cont)

VOLTAGE RANGE		COMPRESSOR						CONDENSER FAN MOTOR		EVAPORATOR FAN MOTOR		POWER EXHAUST			OPTIONAL ELECTRIC HEAT		POWER SUPPLY	
		No. A1			No. B1													
Min	Max	Qty	RLA (ea)	LRA (ea)	Qty	RLA (ea)	LRA (ea)	Qty	FLA	Hp	FLA	Qty	Hp (ea)	FLA (ea)	FLA	kW	MCA	FUSE OR HACR BRKR*
187	253	2	33.3	239	2	48.1	245	4	6.6 (ea)	20	59.4 / 54.0	—	—	— / —	— 78.9/ 90.0 157.7/ 182.0 236.6/ 273.0	— 36/ 36 72/ 72 108/ 108	263.5/ 256.7 263.5/ 256.7 263.5/ 256.7 310.9/ 340.5	300/ 300 300/ 300 300/ 300 350/ 350
												2	3	10.6 / 9.6	— 78.9/ 90.0 157.7/ 182.0 236.6/ 273.0	— 36/ 36 72/ 72 108/ 108	284.7/ 275.9 284.7/ 275.9 284.7/ 275.9 337.4/ 364.5	300/ 300 300/ 300 300/ 300 350/ 400
													5	16.7 / 15.2	— 78.9/ 90.0 157.7/ 182.0 236.6/ 273.0	— 36/ 36 72/ 72 108/ 108	296.9/ 287.1 296.9/ 287.1 296.9/ 287.5 352.6/ 378.5	350/ 300 350/ 300 350/ 300 400/ 400
													7.5	24.2 / 22.0	— 78.9/ 90.0 157.7/ 182.0 236.6/ 273.0	— 36/ 36 72/ 72 108/ 108	311.9/ 300.7 311.9/ 300.7 311.9/ 304.5 371.4/ 395.5	350/ 350 350/ 350 350/ 350 400/ 400
													10	30.8 / 28.0	— 78.9/ 90.0 157.7/ 182.0 236.6/ 273.0	— 36/ 36 72/ 72 108/ 108	325.1/ 312.7 325.1/ 312.7 325.1/ 319.5 387.9/ 410.5	350/ 350 350/ 350 350/ 350 400/ 450
										25	74.8 / 68.0	—	—	— / —	— 78.9/ 90.0 157.7/ 182.0 236.6/ 273.0	— 36/ 36 72/ 72 108/ 108	282.7/ 274.2 282.7/ 274.2 282.7/ 274.2 330.1/ 358.0	350/ 300 350/ 300 350/ 300 400/ 400
												2	3	10.6 / 9.6	— 78.9/ 90.0 157.7/ 182.0 236.6/ 273.0	— 36/ 36 72/ 72 108/ 108	303.9/ 293.4 303.9/ 293.4 303.9/ 293.4 356.6/ 382.0	350/ 350 350/ 350 350/ 350 400/ 400
													5	16.7 / 15.2	— 78.9/ 90.0 157.7/ 182.0 236.6/ 273.0	— 36/ 36 72/ 72 108/ 108	316.1/ 304.6 316.1/ 304.6 316.1/ 305.0 371.9/ 396.0	350/ 350 350/ 350 350/ 350 400/ 450
													7.5	24.2 / 22.0	— 78.9/ 90.0 157.7/ 182.0 236.6/ 273.0	— 36/ 36 72/ 72 108/ 108	331.1/ 318.2 331.1/ 318.2 331.1/ 322.0 390.6/ 413.0	400/ 350 400/ 350 400/ 350 450/ 450
													10	30.8 / 28.0	— 78.9/ 90.0 157.7/ 182.0 236.6/ 273.0	— 36/ 36 72/ 72 108/ 108	344.3/ 330.2 344.3/ 330.2 344.3/ 337.0 407.1/ 428.0	400/ 350 400/ 350 400/ 350 450/ 450
										30	88.0 / 80.0	—	—	— / —	— 78.9/ 90.0 157.7/ 182.0 236.6/ 273.0	— 36/ 36 72/ 72 108/ 108	299.2/ 289.2 299.2/ 289.2 299.2/ 289.2 346.6/ 373.0	350/ 350 350/ 350 350/ 350 400/ 450
												2	3	10.6 / 9.6	— 78.9/ 90.0 157.7/ 182.0 236.6/ 273.0	— 36/ 36 72/ 72 108/ 108	320.4/ 308.4 320.4/ 308.4 320.4/ 308.4 373.1/ 397.0	400/ 350 400/ 350 400/ 350 450/ 450
													5	16.7 / 15.2	— 78.9/ 90.0 157.7/ 182.0 236.6/ 273.0	— 36/ 36 72/ 72 108/ 108	332.6/ 319.6 332.6/ 319.6 332.6/ 320.0 388.4/ 411.0	400/ 350 400/ 350 400/ 350 450/ 450
													7.5	24.2 / 22.0	— 78.9/ 90.0 157.7/ 182.0 236.6/ 273.0	— 36/ 36 72/ 72 108/ 108	347.6/ 333.2 347.6/ 333.2 347.6/ 337.0 407.1/ 428.0	400/ 400 400/ 400 400/ 400 450/ 450
													10	30.8 / 28.0	— 78.9/ 90.0 157.7/ 182.0 236.6/ 273.0	— 36/ 36 72/ 72 108/ 108	360.8/ 345.2 360.8/ 345.2 360.8/ 352.0 423.6/ 443.0	400/ 400 400/ 400 400/ 400 450/ 500

See page 169 for legend and notes.

Table 19 — Electrical Data — 50P 050 Units (cont)

380-3-60 (V-Ph-Hz)

VOLTAGE RANGE		COMPRESSOR						CONDENSER FAN MOTOR		EVAPORATOR FAN MOTOR		POWER EXHAUST			OPTIONAL ELECTRIC HEAT		POWER SUPPLY	
		No. A1			No. B1													
Min	Max	Qty	RLA (ea)	LRA (ea)	Qty	RLA (ea)	LRA (ea)	Qty	FLA	Hp	FLA	Qty	Hp (ea)	FLA (ea)	FLA	kW	MCA	FUSE OR HACR BRKR*
342	418	2	23.7	145	2	23.7	145	4	3.9 (ea)	7 1/2	12.5	—	—	—	—	—	128.8	150
															38.3	36	128.8	150
															76.8	72	128.8	150
															114.7	108	130.3	150
												2	3	4.0	—	—	136.8	150
															38.3	36	136.8	150
															76.8	72	136.8	150
															114.7	108	140.3	150
													5	9.1	—	—	147.0	150
															38.3	36	147.0	150
															76.8	72	147.0	150
															114.7	108	153.1	175
													7.5	12.5	—	—	153.8	175
															38.3	36	153.8	175
															76.8	72	153.8	175
															114.7	108	161.6	175
													10	16.7	—	—	162.2	175
															38.3	36	162.2	175
															76.8	72	162.2	175
															114.7	108	172.1	175
										10	16.7	—	—	—	—	—	133.0	150
															38.3	36	133.0	150
															76.8	72	133.0	150
															114.7	108	135.6	150
												2	3	4.0	—	—	141.0	150
															38.3	36	141.0	150
															76.8	72	141.0	150
															114.7	108	145.6	150
													5	9.1	—	—	151.2	175
															38.3	36	151.2	175
															76.8	72	151.2	175
															114.7	108	158.3	175
													7.5	12.5	—	—	158.0	175
															38.3	36	158.0	175
															76.8	72	158.0	175
															114.7	108	166.8	175
													10	16.7	—	—	166.4	175
															38.3	36	166.4	175
															76.8	72	166.4	175
															114.7	108	177.3	200
										15	24.5	—	—	—	—	—	141.0	150
															38.3	36	141.0	150
															76.8	72	141.0	150
															114.7	108	145.3	150
												2	3	4.0	—	—	149.0	150
															38.3	36	149.0	150
															76.8	72	149.0	150
															114.7	108	155.3	175
													5	9.1	—	—	159.2	175
															38.3	36	159.2	175
															76.8	72	159.2	175
															114.7	108	168.1	175
													7.5	12.5	—	—	166.0	175
															38.3	36	166.0	175
															76.8	72	166.0	175
															114.7	108	176.6	200
													10	16.7	—	—	174.4	175
															38.3	36	174.4	175
															76.8	72	174.4	175
															114.7	108	187.1	200

See page 169 for legend and notes.

Table 19 — Electrical Data — 50P 050 Units (cont)

380-3-60 (V-Ph-Hz) (cont)

VOLTAGE RANGE		COMPRESSOR						CONDENSER FAN MOTOR		EVAPORATOR FAN MOTOR		POWER EXHAUST			OPTIONAL ELECTRIC HEAT		POWER SUPPLY	
		No. A1			No. B1													
Min	Max	Qty	RLA (ea)	LRA (ea)	Qty	RLA (ea)	LRA (ea)	Qty	FLA	Hp	FLA	Qty	Hp (ea)	FLA (ea)	FLA	kW	MCA	FUSE OR HACR BRKR*
342	418	2	23.7	145	2	23.7	145	4	3.9 (ea)	20	30.0	—	—	—	—	—	147.9	175
															38.3	36	147.9	175
															76.8	72	147.9	175
															114.7	108	152.2	175
												2	3	4.0	—	—	155.9	175
															38.3	36	155.9	175
															76.8	72	155.9	175
															114.7	108	162.2	175
													5	9.1	—	—	166.1	175
															38.3	36	166.1	175
															76.8	72	166.1	175
															114.7	108	175.0	200
													7.5	12.5	—	—	172.9	200
															38.3	36	172.9	200
															76.8	72	172.9	200
															114.7	108	183.5	200
													10	16.7	—	—	181.3	200
															38.3	36	181.3	200
															76.8	72	181.3	200
															114.7	108	194.0	200
										25	38.0	—	—	—	—	—	157.9	175
															38.3	36	157.9	175
															76.8	72	157.9	175
															114.7	108	162.2	200
												2	3	4.0	—	—	165.9	200
															38.3	36	165.9	200
															76.8	72	165.9	200
															114.7	108	172.2	200
													5	9.1	—	—	176.1	200
															38.3	36	176.1	200
															76.8	72	176.1	200
															114.7	108	185.0	200
													7.5	12.5	—	—	182.9	200
															38.3	36	182.9	200
															76.8	72	182.9	200
															114.7	108	193.5	225
													10	16.7	—	—	191.3	225
															38.3	36	191.3	225
															76.8	72	191.3	225
															114.7	108	204.0	225
										30	43.5	—	—	—	—	—	164.8	200
															38.3	36	164.8	200
															76.8	72	164.8	200
															114.7	108	169.1	200
												2	3	4.0	—	—	172.8	200
															38.3	36	172.8	200
															76.8	72	172.8	200
															114.7	108	179.1	200
													5	9.1	—	—	183.0	225
															38.3	36	183.0	225
															76.8	72	183.0	225
															114.7	108	191.8	225
													7.5	12.5	—	—	189.8	225
															38.3	36	189.8	225
															76.8	72	189.8	225
															114.7	108	200.3	225
													10	16.7	—	—	198.2	225
															38.3	36	198.2	225
															76.8	72	198.2	225
															114.7	108	210.8	225

See page 169 for legend and notes.

Table 19 — Electrical Data — 50P 050 Units (cont)

460-3-60 (V-Ph-Hz)

VOLTAGE RANGE		COMPRESSOR						CONDENSER FAN MOTOR		EVAPORATOR FAN MOTOR		POWER EXHAUST			OPTIONAL ELECTRIC HEAT		POWER SUPPLY	
		No. A1			No. B1													
Min	Max	Qty	RLA (ea)	LRA (ea)	Qty	RLA (ea)	LRA (ea)	Qty	FLA	Hp	FLA	Qty	Hp (ea)	FLA (ea)	FLA	kW	MCA	FUSE OR HACR BRKR*
414	508	2	17.9	125	2	18.6	125	4	3.3 (ea)	7 1/2	11.0	—	—	—	—	—	101.9	110
															46.3	36	101.9	110
															93.0	72	106.8	125
															139.0	108	152.8	175
												2	3	4.8	—	—	111.5	125
															46.3	36	111.5	125
															93.0	72	118.8	125
															139.0	108	164.8	175
													5	7.6	—	—	117.1	125
															46.3	36	117.1	125
															93.0	72	125.8	150
															139.0	108	171.8	175
													7.5	11.0	—	—	123.9	125
															46.3	36	123.9	125
															93.0	72	134.3	150
															139.0	108	180.3	200
													10	14.0	—	—	129.9	150
															46.3	36	129.9	150
															93.0	72	141.8	150
															139.0	108	187.8	200
										10	14.0	—	—	—	—	—	104.9	110
															46.3	36	104.9	110
															93.0	72	110.5	125
															139.0	108	156.5	175
												2	3	4.8	—	—	114.5	125
															46.3	36	114.5	125
															93.0	72	122.5	125
															139.0	108	168.5	175
													5	7.6	—	—	120.1	125
															46.3	36	120.1	125
															93.0	72	129.5	150
															139.0	108	175.5	200
													7.5	11.0	—	—	126.9	150
															46.3	36	126.9	150
															93.0	72	138.0	150
															139.0	108	184.0	200
													10	14.0	—	—	132.9	150
															46.3	36	132.9	150
															93.0	72	145.5	150
															139.0	108	191.5	200
										15	21.0	—	—	—	—	—	112.5	125
															46.3	36	112.5	125
															93.0	72	119.3	125
															139.0	108	165.3	175
												2	3	4.8	—	—	122.1	125
															46.3	36	122.1	125
															93.0	72	131.3	150
															139.0	108	177.3	200
													5	7.6	—	—	127.7	150
															46.3	36	127.7	150
															93.0	72	138.3	150
															139.0	108	184.3	200
													7.5	11.0	—	—	134.5	150
															46.3	36	134.5	150
															93.0	72	146.8	150
															139.0	108	192.8	200
													10	14.0	—	—	140.5	150
															46.3	36	140.5	150
															93.0	72	154.3	175
															139.0	108	200.3	225

See page 169 for legend and notes.

Table 19 — Electrical Data — 50P 050 Units (cont)

460-3-60 (V-Ph-Hz) (cont)

VOLTAGE RANGE		COMPRESSOR						CONDENSER FAN MOTOR		EVAPORATOR FAN MOTOR		POWER EXHAUST			OPTIONAL ELECTRIC HEAT		POWER SUPPLY	
		No. A1			No. B1													
Min	Max	Qty	RLA (ea)	LRA (ea)	Qty	RLA (ea)	LRA (ea)	Qty	FLA	Hp	FLA	Qty	Hp (ea)	FLA (ea)	FLA	kW	MCA	FUSE OR HACR BRKR*
414	508	2	17.9	125	2	18.6	125	4	3.3 (ea)	20	27.0	—	—	—	—	—	120.0	125
															46.3	36	120.0	125
															93.0	72	126.8	150
															139.0	108	172.8	175
												2	3	4.8	—	—	129.6	150
															46.3	36	129.6	150
															93.0	72	138.8	150
															139.0	108	184.8	200
													5	7.6	—	—	135.2	150
															46.3	36	135.2	150
															93.0	72	145.8	150
															139.0	108	191.8	200
													7.5	11.0	—	—	142.0	150
															46.3	36	142.0	150
															93.0	72	154.3	175
															139.0	108	200.3	225
													10	14.0	—	—	148.0	150
															46.3	36	148.0	150
															93.0	72	161.8	175
															139.0	108	207.8	225
										25	34.0	—	—	—	—	—	128.7	150
															46.3	36	128.7	150
															93.0	72	135.5	150
															139.0	108	181.5	200
												2	3	4.8	—	—	138.3	150
															46.3	36	138.3	150
															93.0	72	147.5	175
															139.0	108	193.5	225
													5	7.6	—	—	143.9	175
															46.3	36	143.9	175
															93.0	72	154.5	175
															139.0	108	200.5	225
													7.5	11.0	—	—	150.7	175
															46.3	36	150.7	175
															93.0	72	163.0	175
															139.0	108	209.0	225
													10	14.0	—	—	156.7	175
															46.3	36	156.7	175
															93.0	72	170.5	175
															139.0	108	216.5	225
										30	40.0	—	—	—	—	—	136.2	175
															46.3	36	136.2	175
															93.0	72	143.0	175
															139.0	108	189.0	225
												2	3	4.8	—	—	145.8	175
															46.3	36	145.8	175
															93.0	72	155.0	175
															139.0	108	201.0	225
													5	7.6	—	—	151.4	175
															46.3	36	151.4	175
															93.0	72	162.0	175
															139.0	108	208.0	225
													7.5	11.0	—	—	158.2	175
															46.3	36	158.2	175
															93.0	72	170.5	200
															139.0	108	216.5	250
													10	14.0	—	—	164.2	200
															46.3	36	164.2	200
															93.0	72	178.0	200
															139.0	108	224.0	250

See page 169 for legend and notes.

Table 19 — Electrical Data — 50P 050 Units (cont)

575-3-60 (V-Ph-Hz)

VOLTAGE RANGE		COMPRESSOR						CONDENSER FAN MOTOR		EVAPORATOR FAN MOTOR		POWER EXHAUST			OPTIONAL ELECTRIC HEAT		POWER SUPPLY	
		No. A1			No. B1													
Min	Max	Qty	RLA (ea)	LRA (ea)	Qty	RLA (ea)	LRA (ea)	Qty	FLA	Hp	FLA	Qty	Hp (ea)	FLA (ea)	FLA	kW	MCA	FUSE OR HACR BRKR*
518	632	2	12.8	80	2	14.7	100	4	2.6 (ea)	7 1/2	9.0	—	—	—	—	—	78.1	90
															36.0	36	78.1	90
															72.0	72	83.3	90
															108.0	108	119.3	125
												2	3	3.9	—	—	85.9	100
															36.0	36	85.9	100
															72.0	72	93.0	100
															108.0	108	129.0	150
													5	6.1	—	—	90.3	100
															36.0	36	90.3	100
															72.0	72	98.5	110
															108.0	108	134.5	150
													7.5	9.0	—	—	96.1	110
															36.0	36	96.1	110
															72.0	72	105.8	110
															108.0	108	141.8	150
													10	11.0	—	—	100.1	110
															36.0	36	100.1	110
															72.0	72	110.8	125
															108.0	108	146.8	150
										10	11.0	—	—	—	—	—	80.1	90
															36.0	36	80.1	90
															72.0	72	85.8	100
															108.0	108	121.8	125
												2	3	3.9	—	—	87.9	100
															36.0	36	87.9	100
															72.0	72	95.5	100
															108.0	108	131.5	150
													5	6.1	—	—	92.3	100
															36.0	36	92.3	100
															72.0	72	101.0	110
															108.0	108	137.0	150
													7.5	9.0	—	—	98.1	110
															36.0	36	98.1	110
															72.0	72	108.3	110
															108.0	108	144.3	150
													10	11.0	—	—	102.1	110
															36.0	36	102.1	110
															72.0	72	113.3	125
															108.0	108	149.3	150
										15	17.0	—	—	—	—	—	86.7	100
															36.0	36	86.7	100
															72.0	72	93.3	110
															108.0	108	129.3	150
												2	3	3.9	—	—	94.5	110
															36.0	36	94.5	110
															72.0	72	103.0	110
															108.0	108	139.0	150
													5	6.1	—	—	98.9	110
															36.0	36	98.9	110
															72.0	72	108.5	110
															108.0	108	144.5	150
													7.5	9.0	—	—	104.7	110
															36.0	36	104.7	110
															72.0	72	115.8	125
															108.0	108	151.8	175
													10	11.0	—	—	108.7	125
															36.0	36	108.7	125
															72.0	72	120.8	125
															108.0	108	156.8	175

See page 169 for legend and notes.

Table 19 — Electrical Data — 50P 050 Units (cont)

575-3-60 (V-Ph-Hz) (cont)

VOLTAGE RANGE		COMPRESSOR						CONDENSER FAN MOTOR		EVAPORATOR FAN MOTOR		POWER EXHAUST			OPTIONAL ELECTRIC HEAT		POWER SUPPLY	
		No. A1			No. B1													
Min	Max	Qty	RLA (ea)	LRA (ea)	Qty	RLA (ea)	LRA (ea)	Qty	FLA	Hp	FLA	Qty	Hp (ea)	FLA (ea)	FLA	kW	MCA	FUSE OR HACR BRKR*
518	632	2	12.8	80	2	14.7	100	4	2.6 (ea)	20	22.0	—	—	—	—	—	92.9	110
															36.0	36	92.9	110
															72.0	72	99.5	110
															108.0	108	135.5	150
												2	3	3.9	—	—	100.7	110
															36.0	36	100.7	110
															72.0	72	109.3	125
															108.0	108	145.3	150
													5	6.1	—	—	105.1	125
															36.0	36	105.1	125
															72.0	72	114.8	125
															108.0	108	150.8	175
													7.5	9.0	—	—	110.9	125
															36.0	36	110.9	125
															72.0	72	122.0	125
															108.0	108	158.0	175
													10	11.0	—	—	114.9	125
															36.0	36	114.9	125
															72.0	72	127.0	150
															108.0	108	163.0	175
										25	27.0	—	—	—	—	—	99.2	125
															36.0	36	99.2	125
															72.0	72	105.8	125
															108.0	108	141.8	150
												2	3	3.9	—	—	107.0	125
															36.0	36	107.0	125
															72.0	72	115.5	125
															108.0	108	151.5	175
													5	6.1	—	—	111.4	125
															36.0	36	111.4	125
															72.0	72	121.0	125
															108.0	108	157.0	175
													7.5	9.0	—	—	117.2	125
															36.0	36	117.2	125
															72.0	72	128.3	150
															108.0	108	164.3	175
													10	11.0	—	—	121.2	125
															36.0	36	121.2	125
															72.0	72	133.3	150
															108.0	108	169.3	175
										30	32.0	—	—	—	—	—	105.4	125
															36.0	36	105.4	125
															72.0	72	112.0	125
															108.0	108	148.0	175
												2	3	3.9	—	—	113.2	125
															36.0	36	113.2	125
															72.0	72	121.8	150
															108.0	108	157.8	175
													5	6.1	—	—	117.6	125
															36.0	36	117.6	125
															72.0	72	127.3	150
															108.0	108	163.3	175
													7.5	9.0	—	—	123.4	150
															36.0	36	123.4	150
															72.0	72	134.5	150
															108.0	108	170.5	175
													10	11.0	—	—	127.4	150
															36.0	36	127.4	150
															72.0	72	139.5	150
															108.0	108	175.5	200

See page 169 for legend and notes.

Table 20 — Electrical Data — 50P050 Units with Optional Return Fan

208/230-3-60 (V-Ph-Hz)

VOLTAGE RANGE		COMPRESSOR						CONDENSER FAN MOTOR		EVAPORATOR FAN MOTOR		RETURN FAN			OPTIONAL ELECTRIC HEAT		POWER SUPPLY	
		No. A1			No. B1													
Min	Max	Qty	RLA (ea)	LRA (ea)	Qty	RLA (ea)	LRA (ea)	Qty	FLA	Hp	FLA	Qty	Hp (ea)	FLA (ea)	FLA	kW	MCA	FUSE OR HACR BRKR*
187	253	2	33.3	239	2	48.1	245	4	6.6 (ea)	7 1/2	24.2 / 22.0	—	—	— / —	— / — 78.9 / 90.0 157.7 / 182.0 236.6 / 273.0	— / — 36 / 36 72 / 72 108 / 108	225.4 / 223.2 225.4 / 223.2 225.4 / 223.2 266.9 / 300.5	250 / 250 250 / 250 250 / 250 300 / 350
												1	10	30.8 / 28.0	— / — 78.9 / 90.0 157.7 / 182.0 236.6 / 273.0	— / — 36 / 36 72 / 72 108 / 108	256.2 / 251.2 256.2 / 251.2 256.2 / 251.2 305.4 / 335.5	300 / 300 300 / 300 300 / 300 350 / 350
													15	46.2 / 42.0	— / — 78.9 / 90.0 157.7 / 182.0 236.6 / 273.0	— / — 36 / 36 72 / 72 108 / 108	271.6 / 265.2 271.6 / 265.2 271.6 / 265.2 324.6 / 353.0	300 / 300 300 / 300 300 / 300 350 / 400
													20	59.4 / 54.0	— / — 78.9 / 90.0 157.7 / 182.0 236.6 / 273.0	— / — 36 / 36 72 / 72 108 / 108	287.7 / 278.7 287.7 / 278.7 287.7 / 278.7 341.1 / 368.0	300 / 300 300 / 300 300 / 300 350 / 400
													25	74.8 / 68.0	— / — 78.9 / 90.0 157.7 / 182.0 236.6 / 273.0	— / — 36 / 36 72 / 72 108 / 108	306.9 / 296.2 306.9 / 296.2 306.9 / 296.2 360.4 / 385.5	350 / 350 350 / 350 350 / 350 400 / 400
										10	30.8 / 28.0	—	—	— / —	— / — 78.9 / 90.0 157.7 / 182.0 236.6 / 273.0	— / — 36 / 36 72 / 72 108 / 108	232.0 / 229.2 232.0 / 229.2 232.0 / 229.2 275.1 / 308.0	250 / 250 250 / 250 250 / 250 300 / 350
												1	10	30.8 / 28.0	— / — 78.9 / 90.0 157.7 / 182.0 236.6 / 273.0	— / — 36 / 36 72 / 72 108 / 108	262.8 / 257.2 262.8 / 257.2 262.8 / 257.2 313.6 / 343.0	300 / 300 300 / 300 300 / 300 350 / 350
													15	46.2 / 42.0	— / — 78.9 / 90.0 157.7 / 182.0 236.6 / 273.0	— / — 36 / 36 72 / 72 108 / 108	278.2 / 271.2 278.2 / 271.2 278.2 / 271.2 332.9 / 360.5	300 / 300 300 / 300 300 / 300 350 / 400
													20	59.4 / 54.0	— / — 78.9 / 90.0 157.7 / 182.0 236.6 / 273.0	— / — 36 / 36 72 / 72 108 / 108	294.3 / 284.7 294.3 / 284.7 294.3 / 284.7 349.4 / 375.5	350 / 300 350 / 300 350 / 300 400 / 400
													25	74.8 / 68.0	— / — 78.9 / 90.0 157.7 / 182.0 236.6 / 273.0	— / — 36 / 36 72 / 72 108 / 108	313.5 / 302.2 313.5 / 302.2 313.5 / 302.2 368.6 / 393.0	350 / 350 350 / 350 350 / 350 400 / 450
										15	46.2 / 42.0	—	—	— / —	— / — 78.9 / 90.0 157.7 / 182.0 236.6 / 273.0	— / — 36 / 36 72 / 72 108 / 108	247.4 / 243.2 247.4 / 243.2 247.4 / 243.2 294.4 / 325.5	250 / 250 250 / 250 250 / 250 300 / 350
												1	10	30.8 / 28.0	— / — 78.9 / 90.0 157.7 / 182.0 236.6 / 273.0	— / — 36 / 36 72 / 72 108 / 108	278.2 / 271.2 278.2 / 271.2 278.2 / 271.2 332.9 / 360.5	300 / 300 300 / 300 300 / 300 350 / 400
													15	46.2 / 42.0	— / — 78.9 / 90.0 157.7 / 182.0 236.6 / 273.0	— / — 36 / 36 72 / 72 108 / 108	293.6 / 285.2 293.6 / 285.2 293.6 / 287.0 352.1 / 378.0	300 / 300 300 / 300 300 / 300 400 / 400
													20	59.4 / 54.0	— / — 78.9 / 90.0 157.7 / 182.0 236.6 / 273.0	— / — 36 / 36 72 / 72 108 / 108	309.7 / 298.7 309.7 / 298.7 309.7 / 302.0 368.6 / 393.0	350 / 350 350 / 350 350 / 350 400 / 400
													25	74.8 / 68.0	— / — 78.9 / 90.0 157.7 / 182.0 236.6 / 273.0	— / — 36 / 36 72 / 72 108 / 108	328.9 / 316.2 328.9 / 316.2 328.9 / 319.5 387.9 / 410.5	400 / 350 400 / 350 400 / 350 450 / 450

See page 169 for legend and notes.

Table 20 — Electrical Data — 50P050 Units with Optional Return Fan (cont)

208/230-3-60 (V-Ph-Hz) (cont)

VOLTAGE RANGE		COMPRESSOR						CONDENSER FAN MOTOR		EVAPORATOR FAN MOTOR		RETURN FAN			OPTIONAL ELECTRIC HEAT		POWER SUPPLY	
		No. A1			No. B1													
Min	Max	Qty	RLA (ea)	LRA (ea)	Qty	RLA (ea)	LRA (ea)	Qty	FLA	Hp	FLA	Qty	Hp (ea)	FLA (ea)	FLA	kW	MCA	FUSE OR HACR BRKR*
187	253	2	33.3	239	2	48.1	245	4	6.6 (ea)	20	59.4 / 54.0	—	—	— / —	— / — 78.9 / 90.0 157.7 / 182.0 236.6 / 273.0	— / — 36 / 36 72 / 72 108 / 108	263.5 / 256.7 263.5 / 256.7 263.5 / 256.7 310.9 / 340.5	300 / 300 300 / 300 300 / 300 350 / 350
												1	10	30.8 / 28.0	— / — 78.9 / 90.0 157.7 / 182.0 236.6 / 273.0	— / — 36 / 36 72 / 72 108 / 108	294.3 / 284.7 294.3 / 284.7 294.3 / 284.7 349.4 / 375.5	350 / 300 350 / 300 350 / 300 400 / 400
													15	46.2 / 42.0	— / — 78.9 / 90.0 157.7 / 182.0 236.6 / 273.0	— / — 36 / 36 72 / 72 108 / 108	309.7 / 298.7 309.7 / 298.7 309.7 / 302.0 368.6 / 393.0	350 / 350 350 / 350 350 / 350 400 / 400
													20	59.4 / 54.0	— / — 78.9 / 90.0 157.7 / 182.0 236.6 / 273.0	— / — 36 / 36 72 / 72 108 / 108	322.9 / 310.7 322.9 / 310.7 322.9 / 317.0 385.1 / 408.0	350 / 350 350 / 350 350 / 350 400 / 450
													25	74.8 / 68.0	— / — 78.9 / 90.0 157.7 / 182.0 236.6 / 273.0	— / — 36 / 36 72 / 72 108 / 108	342.1 / 328.2 342.1 / 328.2 342.1 / 334.5 404.4 / 425.5	400 / 350 400 / 350 400 / 350 450 / 450
										25	74.8 / 68.0	—	—	— / —	— / — 78.9 / 90.0 157.7 / 182.0 236.6 / 273.0	— / — 36 / 36 72 / 72 108 / 108	282.7 / 274.2 282.7 / 274.2 282.7 / 274.2 330.1 / 358.0	350 / 300 350 / 300 350 / 300 400 / 400
												1	10	30.8 / 28.0	— / — 78.9 / 90.0 157.7 / 182.0 236.6 / 273.0	— / — 36 / 36 72 / 72 108 / 108	313.5 / 302.2 313.5 / 302.2 313.5 / 302.2 368.6 / 393.0	350 / 350 350 / 350 350 / 350 400 / 450
													15	46.2 / 42.0	— / — 78.9 / 90.0 157.7 / 182.0 236.6 / 273.0	— / — 36 / 36 72 / 72 108 / 108	328.9 / 316.2 328.9 / 316.2 328.9 / 319.5 387.9 / 410.5	400 / 350 400 / 350 400 / 350 450 / 450
													20	59.4 / 54.0	— / — 78.9 / 90.0 157.7 / 182.0 236.6 / 273.0	— / — 36 / 36 72 / 72 108 / 108	342.1 / 328.2 342.1 / 328.2 342.1 / 334.5 404.4 / 425.5	400 / 350 400 / 350 400 / 350 450 / 450
													25	74.8 / 68.0	— / — 78.9 / 90.0 157.7 / 182.0 236.6 / 273.0	— / — 36 / 36 72 / 72 108 / 108	357.5 / 342.2 357.5 / 342.2 357.5 / 352.0 423.6 / 443.0	400 / 400 400 / 400 400 / 400 450 / 450
										30	88.0 / 80.0	—	—	— / —	— / — 78.9 / 90.0 157.7 / 182.0 236.6 / 273.0	— / — 36 / 36 72 / 72 108 / 108	299.2 / 289.2 299.2 / 289.2 299.2 / 289.2 346.6 / 373.0	350 / 350 350 / 350 350 / 350 400 / 450
												1	10	30.8 / 28.0	— / — 78.9 / 90.0 157.7 / 182.0 236.6 / 273.0	— / — 36 / 36 72 / 72 108 / 108	330.0 / 317.2 330.0 / 317.2 330.0 / 317.2 385.1 / 408.0	400 / 350 400 / 350 400 / 350 450 / 450
													15	46.2 / 42.0	— / — 78.9 / 90.0 157.7 / 182.0 236.6 / 273.0	— / — 36 / 36 72 / 72 108 / 108	345.4 / 331.2 345.4 / 331.2 345.4 / 334.5 404.4 / 425.5	400 / 400 400 / 400 400 / 400 450 / 450
													20	59.4 / 54.0	— / — 78.9 / 90.0 157.7 / 182.0 236.6 / 273.0	— / — 36 / 36 72 / 72 108 / 108	358.6 / 343.2 358.6 / 343.2 358.6 / 349.5 420.9 / 440.5	400 / 400 400 / 400 400 / 400 450 / 500
													25	74.8 / 68.0	— / — 78.9 / 90.0 157.7 / 182.0 236.6 / 273.0	— / — 36 / 36 72 / 72 108 / 108	374.0 / 357.2 374.0 / 357.2 374.0 / 367.0 440.1 / 458.0	450 / 400 450 / 400 450 / 400 500 / 500

See page 169 for legend and notes.

Table 20 — Electrical Data — 50P050 Units with Optional Return Fan (cont)

380-3-60 (V-Ph-Hz)

VOLTAGE RANGE		COMPRESSOR						CONDENSER FAN MOTOR		EVAPORATOR FAN MOTOR		RETURN FAN			OPTIONAL ELECTRIC HEAT		POWER SUPPLY	
		No. A1			No. B1													
Min	Max	Qty	RLA (ea)	LRA (ea)	Qty	RLA (ea)	LRA (ea)	Qty	FLA	Hp	FLA	Qty	Hp (ea)	FLA (ea)	FLA	kW	MCA	FUSE OR HACR BRKR*
342	418	2	23.7	145	2	23.7	145	4	3.9 (ea)	7 1/2	12.5	—	—	—	—	—	128.8	150
															38.3	36	128.8	150
															76.8	72	128.8	150
															114.7	108	130.3	150
												1	10	16.7	—	—	145.5	150
															38.3	36	145.5	150
															76.8	72	145.5	150
															114.7	108	151.2	175
													15	24.5	—	—	153.5	175
															38.3	36	153.5	175
															76.8	72	153.5	175
															114.7	108	161.0	175
													20	30.38	—	—	160.4	175
															38.3	36	160.4	175
															76.8	72	160.4	175
															114.7	108	167.8	175
													25		—	—	170.4	200
															38.3	36	170.4	200
															76.8	72	170.4	200
															114.7	108	177.8	200
										10	16.7	—	—	—	—	—	133.0	150
															38.3	36	133.0	150
															76.8	72	133.0	150
															114.7	108	135.6	150
												1	10	16.7	—	—	149.7	150
															38.3	36	149.7	150
															76.8	72	149.7	150
															114.7	108	156.5	175
													15	24.5	—	—	157.7	175
															38.3	36	157.7	175
															76.8	72	157.7	175
															114.7	108	166.2	175
													20	30.38	—	—	164.6	175
															38.3	36	164.6	175
															76.8	72	164.6	175
															114.7	108	173.1	175
													25		—	—	174.6	200
															38.3	36	174.6	200
															76.8	72	174.6	200
															114.7	108	183.1	200
										15	24.5	—	—	—	—	—	141.0	150
															38.3	36	141.0	150
															76.8	72	141.0	150
															114.7	108	145.3	150
												1	10	16.7	—	—	157.7	175
															38.3	36	157.7	175
															76.8	72	157.7	175
															114.7	108	166.2	175
													15	24.5	—	—	165.5	175
															38.3	36	165.5	175
															76.8	72	165.5	175
															114.7	108	176.0	200
													20	30.38	—	—	172.4	200
															38.3	36	172.4	200
															76.8	72	172.4	200
															114.7	108	182.8	200
													25		—	—	182.4	200
															38.3	36	182.4	200
															76.8	72	182.4	200
															114.7	108	192.8	200

See page 169 for legend and notes.

Table 20 — Electrical Data — 50P050 Units with Optional Return Fan (cont)

380-3-60 (V-Ph-Hz) (cont)

VOLTAGE RANGE		COMPRESSOR						CONDENSER FAN MOTOR		EVAPORATOR FAN MOTOR		RETURN FAN			OPTIONAL ELECTRIC HEAT		POWER SUPPLY	
		No. A1			No. B1													
Min	Max	Qty	RLA (ea)	LRA (ea)	Qty	RLA (ea)	LRA (ea)	Qty	FLA	Hp	FLA	Qty	Hp (ea)	FLA (ea)	FLA	kW	MCA	FUSE OR HACR BRKR*
342	418	2	23.7	145	2	23.7	145	4	3.9 (ea)	20	30.0	—	—	—	—	—	147.9	175
															38.3	36	147.9	175
															76.8	72	147.9	175
															114.7	108	152.2	175
												1	10	16.7	—	—	164.6	175
															38.3	36	164.6	175
															76.8	72	164.6	175
															114.7	108	173.1	175
													15	24.5	—	—	172.4	200
															38.3	36	172.4	200
															76.8	72	172.4	200
															114.7	108	182.8	200
													20	30.38	—	—	177.9	200
															38.3	36	177.9	200
															76.8	72	177.9	200
															114.7	108	189.7	200
													25		—	—	187.9	225
															38.3	36	187.9	225
															76.8	72	187.9	225
															114.7	108	199.7	225
										25	38.0	—	—	—	—	—	157.9	175
															38.3	36	157.9	175
															76.8	72	157.9	175
															114.7	108	162.2	200
												1	10	16.7	—	—	174.6	200
															38.3	36	174.6	200
															76.8	72	174.6	200
															114.7	108	183.1	200
													15	24.5	—	—	182.4	200
															38.3	36	182.4	200
															76.8	72	182.4	200
															114.7	108	192.8	200
													20	30.38	—	—	187.9	225
															38.3	36	187.9	225
															76.8	72	187.9	225
															114.7	108	199.7	225
													25		—	—	195.9	225
															38.3	36	195.9	225
															76.8	72	195.9	225
															114.7	108	209.7	225
										30	43.5	—	—	—	—	—	164.8	200
															38.3	36	164.8	200
															76.8	72	164.8	200
															114.7	108	169.1	200
												1	10	16.7	—	—	181.5	200
															38.3	36	181.5	200
															76.8	72	181.5	200
															114.7	108	190.0	225
													15	24.5	—	—	189.3	225
															38.3	36	189.3	225
															76.8	72	189.3	225
															114.7	108	199.7	225
													20	30.38	—	—	194.8	225
															38.3	36	194.8	225
															76.8	72	194.8	225
															114.7	108	206.6	225
													25		—	—	202.8	225
															38.3	36	202.8	225
															76.8	72	202.8	225
															114.7	108	216.6	250

See page 169 for legend and notes.

Table 20 — Electrical Data — 50P050 Units with Optional Return Fan (cont)

460-3-60 (V-Ph-Hz)

VOLTAGE RANGE		COMPRESSOR						CONDENSER FAN MOTOR		EVAPORATOR FAN MOTOR		RETURN FAN			OPTIONAL ELECTRIC HEAT		POWER SUPPLY	
		No. A1			No. B1													
Min	Max	Qty	RLA (ea)	LRA (ea)	Qty	RLA (ea)	LRA (ea)	Qty	FLA	Hp	FLA	Qty	Hp (ea)	FLA (ea)	FLA	kW	MCA	FUSE OR HACR BRKR*
414	508	2	17.9	125	2	18.6	125	4	3.3 (ea)	7 1/2	11.0	—	—	—	—	—	101.9	110
															46.3	36	101.9	110
															93.0	72	106.8	125
															139.0	108	152.8	175
												1	10	14	—	—	115.9	125
															46.3	36	115.9	125
															93.0	72	124.3	125
															139.0	108	170.3	175
													15	21	—	—	123.5	125
															46.3	36	123.5	125
															93.0	72	133.0	150
															139.0	108	179.0	200
													20	27	—	—	131.0	150
															46.3	36	131.0	150
															93.0	72	140.5	150
															139.0	108	186.5	200
													25	34	—	—	139.7	150
															46.3	36	139.7	150
															93.0	72	149.3	175
															139.0	108	195.3	225
										10	14.0	—	—	—	—	—	104.9	110
															46.3	36	104.9	110
															93.0	72	110.5	125
															139.0	108	156.5	175
												1	10	14	—	—	118.9	125
															46.3	36	118.9	125
															93.0	72	128.0	150
															139.0	108	174.0	175
													15	21	—	—	126.5	150
															46.3	36	126.5	150
															93.0	72	136.8	150
															139.0	108	182.8	200
													20	27	—	—	134.0	150
															46.3	36	134.0	150
															93.0	72	144.3	150
															139.0	108	190.3	200
													25	34	—	—	142.7	175
															46.3	36	142.7	175
															93.0	72	153.0	175
															139.0	108	199.0	225
										15	21.0	—	—	—	—	—	112.5	125
															46.3	36	112.5	125
															93.0	72	119.3	125
															139.0	108	165.3	175
												1	10	14	—	—	126.5	150
															46.3	36	126.5	150
															93.0	72	136.8	150
															139.0	108	182.8	200
													15	21	—	—	133.5	150
															46.3	36	133.5	150
															93.0	72	145.5	150
															139.0	108	191.5	200
													20	27	—	—	141.0	150
															46.3	36	141.0	150
															93.0	72	153.0	175
															139.0	108	199.0	200
													25	34	—	—	149.7	175
															46.3	36	149.7	175
															93.0	72	161.8	175
															139.0	108	207.8	225

See page 169 for legend and notes.

Table 20 — Electrical Data — 50P050 Units with Optional Return Fan (cont)

460-3-60 (V-Ph-Hz) (cont)

VOLTAGE RANGE		COMPRESSOR						CONDENSER FAN MOTOR		EVAPORATOR FAN MOTOR		RETURN FAN			OPTIONAL ELECTRIC HEAT		POWER SUPPLY	
		No. A1			No. B1													
Min	Max	Qty	RLA (ea)	LRA (ea)	Qty	RLA (ea)	LRA (ea)	Qty	FLA	Hp	FLA	Qty	Hp (ea)	FLA (ea)	FLA	kW	MCA	FUSE OR HACR BRKR*
414	508	2	17.9	125	2	18.6	125	4	3.3 (ea)	20	27.0	—	—	—	—	—	120.0	125
															46.3	36	120.0	125
															93.0	72	126.8	150
															139.0	108	172.8	175
												1	10	14	—	—	134.0	150
															46.3	36	134.0	150
															93.0	72	144.3	150
															139.0	108	190.3	200
													15	21	—	—	141.0	150
															46.3	36	141.0	150
															93.0	72	153.0	175
															139.0	108	199.0	200
													20	27	—	—	147.0	150
															46.3	36	147.0	150
															93.0	72	160.5	175
															139.0	108	206.5	225
													25	34	—	—	155.7	175
															46.3	36	155.7	175
															93.0	72	169.3	175
															139.0	108	215.3	225
										25	34.0	—	—	—	—	—	128.7	150
															46.3	36	128.7	150
															93.0	72	135.5	150
															139.0	108	181.5	200
												1	10	14	—	—	142.7	175
															46.3	36	142.7	175
															93.0	72	153.0	175
															139.0	108	199.0	225
													15	21	—	—	149.7	175
															46.3	36	149.7	175
															93.0	72	161.8	175
															139.0	108	207.8	225
													20	27	—	—	155.7	175
															46.3	36	155.7	175
															93.0	72	169.3	175
															139.0	108	215.3	225
													25	34	—	—	162.7	175
															46.3	36	162.7	175
															93.0	72	178.0	200
															139.0	108	224.0	225
										30	40.0	—	—	—	—	—	136.2	175
															46.3	36	136.2	175
															93.0	72	143.0	175
															139.0	108	189.0	225
												1	10	14	—	—	150.2	175
															46.3	36	150.2	175
															93.0	72	160.5	175
															139.0	108	206.5	225
													15	21	—	—	157.2	175
															46.3	36	157.2	175
															93.0	72	169.3	200
															139.0	108	215.3	250
													20	27	—	—	163.2	200
															46.3	36	163.2	200
															93.0	72	176.8	200
															139.0	108	222.8	250
													25	34	—	—	170.2	200
															46.3	36	170.2	200
															93.0	72	185.5	200
															139.0	108	231.5	250

See page 169 for legend and notes.

Table 20 — Electrical Data — 50P050 Units with Optional Return Fan (cont)

575-3-60 (V-Ph-Hz)

VOLTAGE RANGE		COMPRESSOR						CONDENSER FAN MOTOR		EVAPORATOR FAN MOTOR		RETURN FAN			OPTIONAL ELECTRIC HEAT		POWER SUPPLY	
		No. A1			No. B1													
Min	Max	Qty	RLA (ea)	LRA (ea)	Qty	RLA (ea)	LRA (ea)	Qty	FLA	Hp	FLA	Qty	Hp (ea)	FLA (ea)	FLA	kW	MCA	FUSE OR HACR BRKR*
518	632	2	12.8	80	2	14.7	100	4	2.6 (ea)	7 1/2	9.0	—	—	—	—	—	78.1	90
															36.0	36	78.1	90
															72.0	72	83.3	90
															108.0	108	119.3	125
												1	10	11.0	—	—	89.1	100
															36.0	36	89.1	100
															72.0	72	97.0	110
															108.0	108	133.0	150
													15	17.0	—	—	95.7	110
															36.0	36	95.7	110
															72.0	72	104.5	110
															108.0	108	140.5	150
													20	22.0	—	—	101.9	110
															36.0	36	101.9	110
															72.0	72	110.8	125
															108.0	108	146.8	150
													25	27.0	—	—	108.2	125
															36.0	36	108.2	125
															72.0	72	117.0	125
															108.0	108	153.0	175
										10	11.0	—	—	—	—	—	80.1	90
															36.0	36	80.1	90
															72.0	72	85.8	100
															108.0	108	121.8	125
												1	10	11.0	—	—	91.1	100
															36.0	36	91.1	100
															72.0	72	99.5	110
															108.0	108	135.5	150
													15	17.0	—	—	97.7	110
															36.0	36	97.7	110
															72.0	72	107.0	110
															108.0	108	143.0	150
													20	22.0	—	—	103.9	125
															36.0	36	103.9	125
															72.0	72	113.3	125
															108.0	108	149.3	150
													25	27.0	—	—	110.2	125
															36.0	36	110.2	125
															72.0	72	119.5	125
															108.0	108	155.5	175
										15	17.0	—	—	—	—	—	86.7	100
															36.0	36	86.7	100
															72.0	72	93.3	110
															108.0	108	129.3	150
												1	10	11.0	—	—	97.7	110
															36.0	36	97.7	110
															72.0	72	107.0	110
															108.0	108	143.0	150
													15	17.0	—	—	103.7	110
															36.0	36	103.7	110
															72.0	72	114.5	125
															108.0	108	150.5	175
													20	22.0	—	—	109.9	125
															36.0	36	109.9	125
															72.0	72	120.8	125
															108.0	108	156.8	175
													25	27.0	—	—	116.2	125
															36.0	36	116.2	125
															72.0	72	127.0	150
															108.0	108	163.0	175

See page 169 for legend and notes.

Table 20 — Electrical Data — 50P050 Units with Optional Return Fan (cont)

575-3-60 (V-Ph-Hz) (cont)

VOLTAGE RANGE		COMPRESSOR						CONDENSER FAN MOTOR		EVAPORATOR FAN MOTOR		RETURN FAN			OPTIONAL ELECTRIC HEAT		POWER SUPPLY	
		No. A1			No. B1													
Min	Max	Qty	RLA (ea)	LRA (ea)	Qty	RLA (ea)	LRA (ea)	Qty	FLA	Hp	FLA	Qty	Hp (ea)	FLA (ea)	FLA	kW	MCA	FUSE OR HACR BRKR*
518	632	2	12.8	80	2	14.7	100	4	2.6 (ea)	20	22.0	—	—	—	—	—	92.9	110
															36.0	36	92.9	110
															72.0	72	99.5	110
															108.0	108	135.5	150
												1	10	11.0	—	—	103.9	125
															36.0	36	103.9	125
															72.0	72	113.3	125
															108.0	108	149.3	150
													15	17.0	—	—	109.9	125
															36.0	36	109.9	125
															72.0	72	120.8	125
															108.0	108	156.8	175
													20	22.0	—	—	114.9	125
															36.0	36	114.9	125
															72.0	72	127.0	150
															108.0	108	163.0	175
													25	27.0	—	—	121.2	125
															36.0	36	121.2	125
															72.0	72	133.3	150
															108.0	108	169.3	175
										25	27.0	—	—	—	—	—	99.2	125
															36.0	36	99.2	125
															72.0	72	105.8	125
															108.0	108	141.8	150
												1	10	11.0	—	—	110.2	125
															36.0	36	110.2	125
															72.0	72	119.5	125
															108.0	108	155.5	175
													15	17.0	—	—	116.2	125
															36.0	36	116.2	125
															72.0	72	127.0	150
															108.0	108	163.0	175
													20	22.0	—	—	121.2	125
															36.0	36	121.2	125
															72.0	72	133.3	150
															108.0	108	169.3	175
													25	27.0	—	—	126.2	150
															36.0	36	126.2	150
															72.0	72	139.5	150
															108.0	108	175.5	200
										30	32.0	—	—	—	—	—	105.4	125
															36.0	36	105.4	125
															72.0	72	112.0	125
															108.0	108	148.0	175
												1	10	11.0	—	—	116.4	125
															36.0	36	116.4	125
															72.0	72	125.8	150
															108.0	108	161.8	175
													15	17.0	—	—	122.4	150
															36.0	36	122.4	150
															72.0	72	133.3	150
															108.0	108	169.3	175
													20	22.0	—	—	127.4	150
															36.0	36	127.4	150
															72.0	72	139.5	150
															108.0	108	175.5	200
													25	27.0	—	—	132.4	150
															36.0	36	132.4	150
															72.0	72	145.8	150
															108.0	108	181.8	200

See page 169 for legend and notes.

Table 21 — Electrical Data — 50P 055 Units

208/230-3-60 (V-Ph-Hz)

VOLTAGE RANGE		COMPRESSOR						CONDENSER FAN MOTOR		EVAPORATOR FAN MOTOR		POWER EXHAUST			OPTIONAL ELECTRIC HEAT		POWER SUPPLY	
		No. A1			No. B1													
Min	Max	Qty	RLA (ea)	LRA (ea)	Qty	RLA (ea)	LRA (ea)	Qty	FLA	Hp	FLA	Qty	Hp (ea)	FLA (ea)	FLA	kW	MCA	FUSE OR HACR BRKR*
187	253	2	48.1	245	2	48.1	245	4	6.6 (ea)	15	46.2 / 42.0	—	—	— / —	— 78.9/ 90.0 157.7/ 182.0 236.6/ 273.0	— 36/ 36 72/ 72 108/ 108	277.0/ 272.8 277.0/ 272.8 277.0/ 272.8 294.4/ 325.5	300/ 300 300/ 300 300/ 300 300/ 350
												2	5	16.7 / 15.2	— 78.9/ 90.0 157.7/ 182.0 236.6/ 273.0	— 36/ 36 72/ 72 108/ 108	310.4/ 303.2 310.4/ 303.2 310.4/ 303.2 336.1/ 363.5	350/ 350 350/ 350 350/ 350 350/ 400
													7.5	24.2 / 22.0	— 78.9/ 90.0 157.7/ 182.0 236.6/ 273.0	— 36/ 36 72/ 72 108/ 108	325.4/ 316.8 325.4/ 316.8 325.4/ 316.8 354.9/ 380.5	350/ 350 350/ 350 350/ 350 400/ 400
													10	30.8 / 28.0	— 78.9/ 90.0 157.7/ 182.0 236.6/ 273.0	— 36/ 36 72/ 72 108/ 108	338.6/ 328.8 338.6/ 328.8 338.6/ 328.8 371.4/ 395.5	350/ 350 350/ 350 350/ 350 400/ 400
										20	59.4 / 54.0	—	—	— / —	— 78.9/ 90.0 157.7/ 182.0 236.6/ 273.0	— 36/ 36 72/ 72 108/ 108	293.1/ 286.3 293.1/ 286.3 293.1/ 286.3 310.9/ 340.5	350/ 300 350/ 300 350/ 300 350/ 350
												2	5	16.7 / 15.2	— 78.9/ 90.0 157.7/ 182.0 236.6/ 273.0	— 36/ 36 72/ 72 108/ 108	326.5/ 316.7 326.5/ 316.7 326.5/ 316.7 352.6/ 378.5	350/ 350 350/ 350 350/ 350 400/ 400
													7.5	24.2 / 22.0	— 78.9/ 90.0 157.7/ 182.0 236.6/ 273.0	— 36/ 36 72/ 72 108/ 108	341.5/ 330.3 341.5/ 330.3 341.5/ 330.3 371.4/ 395.5	400/ 350 400/ 350 400/ 350 400/ 400
													10	30.8 / 28.0	— 78.9/ 90.0 157.7/ 182.0 236.6/ 273.0	— 36/ 36 72/ 72 108/ 108	354.7/ 342.3 354.7/ 342.3 354.7/ 342.3 387.9/ 410.5	400/ 350 400/ 350 400/ 350 400/ 450
										25	74.8 / 68.0	—	—	— / —	— 78.9/ 90.0 157.7/ 182.0 236.6/ 273.0	— 36/ 36 72/ 72 108/ 108	312.3/ 303.8 312.3/ 303.8 312.3/ 303.8 330.1/ 358.0	350/ 350 350/ 350 350/ 350 400/ 400
												2	5	16.7 / 15.2	— 78.9/ 90.0 157.7/ 182.0 236.6/ 273.0	— 36/ 36 72/ 72 108/ 108	345.7/ 334.2 345.7/ 334.2 345.7/ 334.2 371.9/ 396.0	400/ 400 400/ 400 400/ 400 400/ 450
													7.5	24.2 / 22.0	— 78.9/ 90.0 157.7/ 182.0 236.6/ 273.0	— 36/ 36 72/ 72 108/ 108	360.7/ 347.8 360.7/ 347.8 360.7/ 347.8 390.6/ 413.0	400/ 400 400/ 400 400/ 400 450/ 450
													10	30.8 / 28.0	— 78.9/ 90.0 157.7/ 182.0 236.6/ 273.0	— 36/ 36 72/ 72 108/ 108	373.9/ 359.8 373.9/ 359.8 373.9/ 359.8 407.1/ 428.0	400/ 400 400/ 400 400/ 400 450/ 450

See page 169 for legend and notes.

Table 21 — Electrical Data — 50P 055 Units (cont)

208/230-3-60 (V-Ph-Hz) (cont)

VOLTAGE RANGE		COMPRESSOR						CONDENSER FAN MOTOR		EVAPORATOR FAN MOTOR		POWER EXHAUST			OPTIONAL ELECTRIC HEAT		POWER SUPPLY	
		No. A1			No. B1													
Min	Max	Qty	RLA (ea)	LRA (ea)	Qty	RLA (ea)	LRA (ea)	Qty	FLA	Hp	FLA	Qty	Hp (ea)	FLA (ea)	FLA	kW	MCA	FUSE OR HACR BRKR*
187	253	2	48.1	245	2	48.1	245	4	6.6 (ea)	30	88 / 80	—	—	— / —	—	—	328.8/ 318.8	400/ 350
															78.9/ 90.0	36/ 36	328.8/ 318.8	400/ 350
															157.7/ 182.0	72/ 72	328.8/ 318.8	400/ 350
															236.6/ 273.0	108/ 108	346.6/ 373.0	400/ 450
												2	5	16.7 / 15.2	—	—	362.2/ 349.2	450/ 400
															78.9/ 90.0	36/ 36	362.2/ 349.2	450/ 400
															157.7/ 182.0	72/ 72	362.2/ 349.2	450/ 400
															236.6/ 273.0	108/ 108	388.4/ 411.0	450/ 450
													7.5	24.2 / 22.0	—	—	377.2/ 362.8	450/ 400
															78.9/ 90.0	36/ 36	377.2/ 362.8	450/ 400
															157.7/ 182.0	72/ 72	377.2/ 362.8	450/ 400
															236.6/ 273.0	108/ 108	407.1/ 428.0	450/ 450
													10	30.8 / 28.0	—	—	390.4/ 374.8	450/ 450
															78.9/ 90.0	36/ 36	390.4/ 374.8	450/ 450
															157.7/ 182.0	72/ 72	390.4/ 374.8	450/ 450
															236.6/ 273.0	108/ 108	423.6/ 443.0	450/ 500
										40	114 / 104	—	—	— / —	—	—	361.3/ 348.8	450/ 450
															78.9/ 90.0	36/ 36	361.3/ 348.8	450/ 450
															157.7/ 182.0	72/ 72	361.3/ 348.8	450/ 450
															236.6/ 273.0	108/ 108	379.1/ 403.0	450/ 500
												2	5	16.7 / 15.2	—	—	394.7/ 379.2	500/ 450
															78.9/ 90.0	36/ 36	394.7/ 379.2	500/ 450
															157.7/ 182.0	72/ 72	394.7/ 379.2	500/ 450
															236.6/ 273.0	108/ 108	420.9/ 441.0	500/ 500
													7.5	24.2 / 22.0	—	—	409.7/ 392.8	500/ 450
															78.9/ 90.0	36/ 36	409.7/ 392.8	500/ 450
															157.7/ 182.0	72/ 72	409.7/ 392.8	500/ 450
															236.6/ 273.0	108/ 108	439.6/ 458.0	500/ 500
													10	30.8 / 28.0	—	—	422.9/ 404.8	500/ 500
															78.9/ 90.0	36/ 36	422.9/ 404.8	500/ 500
															157.7/ 182.0	72/ 72	422.9/ 404.8	500/ 500
															236.6/ 273.0	108/ 108	456.1/ 473.0	500/ 500

See page 169 for legend and notes.

Table 21 — Electrical Data — 50P 055 Units (cont)

380-3-60 (V-Ph-Hz)

VOLTAGE RANGE		COMPRESSOR						CONDENSER FAN MOTOR		EVAPORATOR FAN MOTOR		POWER EXHAUST			OPTIONAL ELECTRIC HEAT		POWER SUPPLY	
		No. A1			No. B1													
Min	Max	Qty	RLA (ea)	LRA (ea)	Qty	RLA (ea)	LRA (ea)	Qty	FLA	Hp	FLA	Qty	Hp (ea)	FLA (ea)	FLA	kW	MCA	FUSE OR HACR BRKR*
342	418	2	23.7	145	2	23.7	145	4	3.9 (ea)	15	24.5	—	—	—	—	—	141.0	150
															38.3	36	141.0	150
															76.8	72	141.0	150
															114.7	108	145.3	150
												2	5	9.1	—	—	159.2	175
															38.3	36	159.2	175
															76.8	72	159.2	175
															114.7	108	168.1	175
													7.5	12.5	—	—	166.0	175
															38.3	36	166.0	175
															76.8	72	166.0	175
															114.7	108	176.6	200
													10	16.7	—	—	174.4	175
															38.3	36	174.4	175
															76.8	72	174.4	175
															114.7	108	187.1	200
										20	30.0	—	—	—	—	—	147.9	175
															38.3	36	147.9	175
															76.8	72	147.9	175
															114.7	108	152.2	175
												2	5	9.1	—	—	166.1	175
															38.3	36	166.1	175
															76.8	72	166.1	175
															114.7	108	175.0	200
													7.5	12.5	—	—	172.9	200
															38.3	36	172.9	200
															76.8	72	172.9	200
															114.7	108	183.5	200
													10	16.7	—	—	181.3	200
															38.3	36	181.3	200
															76.8	72	181.3	200
															114.7	108	194.0	200
										25	38.0	—	—	—	—	—	157.9	175
															38.3	36	157.9	175
															76.8	72	157.9	175
															114.7	108	162.2	200
												2	5	9.1	—	—	176.1	200
															38.3	36	176.1	200
															76.8	72	176.1	200
															114.7	108	185.0	200
													7.5	12.5	—	—	182.9	200
															38.3	36	182.9	200
															76.8	72	182.9	200
															114.7	108	193.5	225
													10	16.7	—	—	191.3	225
															38.3	36	191.3	225
															76.8	72	191.3	225
															114.7	108	204.0	225

See page 169 for legend and notes.

Table 21 — Electrical Data — 50P 055 Units (cont)

380-3-60 (V-Ph-Hz) (cont)

VOLTAGE RANGE		COMPRESSOR						CONDENSER FAN MOTOR		EVAPORATOR FAN MOTOR		POWER EXHAUST			OPTIONAL ELECTRIC HEAT		POWER SUPPLY	
		No. A1			No. B1													
Min	Max	Qty	RLA (ea)	LRA (ea)	Qty	RLA (ea)	LRA (ea)	Qty	FLA	Hp	FLA	Qty	Hp (ea)	FLA (ea)	FLA	kW	MCA	FUSE OR HACR BRKR*
342	418	2	23.7	145	2	23.7	145	4	3.9 (ea)	30	43.5	—	—	—	—	—	164.8	200
															38.3	36	164.8	200
															76.8	72	164.8	200
															114.7	108	169.1	200
												2	5	9.1	—	—	183.0	225
															38.3	36	183.0	225
															76.8	72	183.0	225
															114.7	108	191.8	225
													7.5	12.5	—	—	189.8	225
															38.3	36	189.8	225
															76.8	72	189.8	225
															114.7	108	200.3	225
													10	16.7	—	—	198.2	225
															38.3	36	198.2	225
															76.8	72	198.2	225
															114.7	108	210.8	225
										40	56.2	—	—	—	—	—	180.7	225
															38.3	36	180.7	225
															76.8	72	180.7	225
															114.7	108	185.0	225
												2	5	9.1	—	—	198.9	250
															38.3	36	198.9	250
															76.8	72	198.9	250
															114.7	108	207.7	250
													7.5	12.5	—	—	205.7	250
															38.3	36	205.7	250
															76.8	72	205.7	250
															114.7	108	216.2	250
													10	16.7	—	—	214.1	250
															38.3	36	214.1	250
															76.8	72	214.1	250
															114.7	108	226.7	250

See page 169 for legend and notes.

Table 21 — Electrical Data — 50P 055 Units (cont)

460-3-60 (V-Ph-Hz)

VOLTAGE RANGE		COMPRESSOR						CONDENSER FAN MOTOR		EVAPORATOR FAN MOTOR		POWER EXHAUST			OPTIONAL ELECTRIC HEAT		POWER SUPPLY	
		No. A1			No. B1													
Min	Max	Qty	RLA (ea)	LRA (ea)	Qty	RLA (ea)	LRA (ea)	Qty	FLA	Hp	FLA	Qty	Hp (ea)	FLA (ea)	FLA	kW	MCA	FUSE OR HACR BRKR*
414	508	2	18.6	125	2	18.6	125	4	3.3 (ea)	15	21.0	—	—	—	—	—	113.9	125
															46.3	36	113.9	125
															93.0	72	119.3	125
															139.0	108	165.3	175
												2	5	7.6	—	—	129.1	150
															46.3	36	129.1	150
															93.0	72	138.3	150
															139.0	108	184.3	200
													7.5	11.0	—	—	135.9	150
															46.3	36	135.9	150
															93.0	72	146.8	150
															139.0	108	192.8	200
													10	14.0	—	—	141.9	150
															46.3	36	141.9	150
															93.0	72	154.3	175
															139.0	108	200.3	225
										20	27.0	—	—	—	—	—	121.4	125
															46.3	36	121.4	125
															93.0	72	126.8	150
															139.0	108	172.8	175
												2	5	7.6	—	—	136.6	150
															46.3	36	136.6	150
															93.0	72	145.8	150
															139.0	108	191.8	200
													7.5	11.0	—	—	143.4	150
															46.3	36	143.4	150
															93.0	72	154.3	175
															139.0	108	200.3	225
													10	14.0	—	—	149.4	175
															46.3	36	149.4	175
															93.0	72	161.8	175
															139.0	108	207.8	225
										25	34.0	—	—	—	—	—	130.1	150
															46.3	36	130.1	150
															93.0	72	135.5	150
															139.0	108	181.5	200
												2	5	7.6	—	—	145.3	175
															46.3	36	145.3	175
															93.0	72	154.5	175
															139.0	108	200.5	225
													7.5	11.0	—	—	152.1	175
															46.3	36	152.1	175
															93.0	72	163.0	175
															139.0	108	209.0	225
													10	14.0	—	—	158.1	175
															46.3	36	158.1	175
															93.0	72	170.5	175
															139.0	108	216.5	225

See page 169 for legend and notes.

Table 21 — Electrical Data — 50P 055 Units (cont)

460-3-60 (V-Ph-Hz) (cont)

VOLTAGE RANGE		COMPRESSOR						CONDENSER FAN MOTOR		EVAPORATOR FAN MOTOR		POWER EXHAUST			OPTIONAL ELECTRIC HEAT		POWER SUPPLY	
		No. A1			No. B1													
Min	Max	Qty	RLA (ea)	LRA (ea)	Qty	RLA (ea)	LRA (ea)	Qty	FLA	Hp	FLA	Qty	Hp (ea)	FLA (ea)	FLA	kW	MCA	FUSE OR HACR BRKR*
414	508	2	18.6	125	2	18.6	125	4	3.3 (ea)	30	40.0	—	—	—	—	—	137.6	175
															46.3	36	137.6	175
															93.0	72	143.0	175
															139.0	108	189.0	225
												2	5	7.6	—	—	152.8	175
															46.3	36	152.8	175
															93.0	72	162.0	175
															139.0	108	208.0	225
													7.5	11.0	—	—	159.6	175
															46.3	36	159.6	175
															93.0	72	170.5	200
															139.0	108	216.5	250
													10	14.0	—	—	165.6	200
															46.3	36	165.6	200
															93.0	72	178.0	200
															139.0	108	224.0	250
										40	52.0	—	—	—	—	—	152.6	200
															46.3	36	152.6	200
															93.0	72	158.0	200
															139.0	108	204.0	250
												2	5	7.6	—	—	167.8	200
															46.3	36	167.8	200
															93.0	72	177.0	225
															139.0	108	223.0	250
													7.5	11.0	—	—	174.6	225
															46.3	36	174.6	225
															93.0	72	185.5	225
															139.0	108	231.5	250
													10	14.0	—	—	180.6	225
															46.3	36	180.6	225
															93.0	72	193.0	225
															139.0	108	239.0	250

See page 169 for legend and notes.

Table 21 — Electrical Data — 50P 055 Units (cont)

575-3-60 (V-Ph-Hz)

VOLTAGE RANGE		COMPRESSOR						CONDENSER FAN MOTOR		EVAPORATOR FAN MOTOR		POWER EXHAUST			OPTIONAL ELECTRIC HEAT		POWER SUPPLY	
		No. A1			No. B1													
Min	Max	Qty	RLA (ea)	LRA (ea)	Qty	RLA (ea)	LRA (ea)	Qty	FLA	Hp	FLA	Qty	Hp (ea)	FLA (ea)	FLA	kW	MCA	FUSE OR HACR BRKR*
518	632	2	14.7	100	2	14.7	100	4	2.6 (ea)	15	17.0	—	—	—	—	—	90.5	100
															36.0	36	90.5	100
															72.0	72	93.3	110
															108.0	108	129.3	150
												2	5	6.1	—	—	102.7	110
															36.0	36	102.7	110
															72.0	72	108.5	110
															108.0	108	144.5	150
													7.5	9.0	—	—	108.5	125
															36.0	36	108.5	125
															72.0	72	115.8	125
															108.0	108	151.8	175
													10	11.0	—	—	112.5	125
															36.0	36	112.5	125
															72.0	72	120.8	125
															108.0	108	156.8	175
										20	22.0	—	—	—	—	—	96.7	110
															36.0	36	96.7	110
															72.0	72	99.5	110
															108.0	108	135.5	150
												2	5	6.1	—	—	108.9	125
															36.0	36	108.9	125
															72.0	72	114.8	125
															108.0	108	150.8	175
													7.5	9.0	—	—	114.7	125
															36.0	36	114.7	125
															72.0	72	122.0	125
															108.0	108	158.0	175
													10	11.0	—	—	118.7	125
															36.0	36	118.7	125
															72.0	72	127.0	150
															108.0	108	163.0	175
										25	27.0	—	—	—	—	—	103.0	125
															36.0	36	103.0	125
															72.0	72	105.8	125
															108.0	108	141.8	150
												2	5	6.1	—	—	115.2	125
															36.0	36	115.2	125
															72.0	72	121.0	125
															108.0	108	157.0	175
													7.5	9.0	—	—	121.0	125
															36.0	36	121.0	125
															72.0	72	128.3	150
															108.0	108	164.3	175
													10	11.0	—	—	125.0	150
															36.0	36	125.0	150
															72.0	72	133.3	150
															108.0	108	169.3	175

See page 169 for legend and notes.

Table 21 — Electrical Data — 50P 055 Units (cont)

575-3-60 (V-Ph-Hz) (cont)

VOLTAGE RANGE		COMPRESSOR						CONDENSER FAN MOTOR		EVAPORATOR FAN MOTOR		POWER EXHAUST			OPTIONAL ELECTRIC HEAT		POWER SUPPLY	
		No. A1			No. B1													
Min	Max	Qty	RLA (ea)	LRA (ea)	Qty	RLA (ea)	LRA (ea)	Qty	FLA	Hp	FLA	Qty	Hp (ea)	FLA (ea)	FLA	kW	MCA	FUSE OR HACR BRKR*
518	632	2	14.7	100	2	14.7	100	4	2.6 (ea)	30	32.0	—	—	—	—	—	109.2	125
															36.0	36	109.2	125
															72.0	72	112.0	125
															108.0	108	148.0	175
												2	5	6.1	—	—	121.4	150
															36.0	36	121.4	150
															72.0	72	127.3	150
															108.0	108	163.3	175
													7.5	9.0	—	—	127.2	150
															36.0	36	127.2	150
															72.0	72	134.5	150
															108.0	108	170.5	175
													10	11.0	—	—	131.2	150
															36.0	36	131.2	150
															72.0	72	139.5	150
															108.0	108	175.5	200
										40	41.0	—	—	—	—	—	120.5	150
															36.0	36	120.5	150
															72.0	72	123.3	150
															108.0	108	159.3	200
												2	5	6.1	—	—	132.7	150
															36.0	36	132.7	150
															72.0	72	138.5	175
															108.0	108	174.5	200
													7.5	9.0	—	—	138.5	175
															36.0	36	138.5	175
															72.0	72	145.8	175
															108.0	108	181.8	200
													10	11.0	—	—	142.5	175
															36.0	36	142.5	175
															72.0	72	150.8	175
															108.0	108	186.8	200

See page 169 for legend and notes.

Table 22 — Electrical Data — 50P055 Units with Optional Return Fan

208/230-3-60 (V-Ph-Hz)

VOLTAGE RANGE		COMPRESSOR						CONDENSER FAN MOTOR		EVAPORATOR FAN MOTOR		RETURN FAN			OPTIONAL ELECTRIC HEAT		POWER SUPPLY	
		No. A1			No. B1													
Min	Max	Qty	RLA (ea)	LRA (ea)	Qty	RLA (ea)	LRA (ea)	Qty	FLA	Hp	FLA	Qty	Hp (ea)	FLA (ea)	FLA	kW	MCA	FUSE OR HACR BRKR*
187	253	2	48.1	245	2	48.1	245	4	6.6 (ea)	15	46.2 / 42.0	—	—	— / —	— / — 78.9 / 90.0 157.7 / 182.0 236.6 / 273.0	— / — 36 / 36 72 / 72 108 / 108	277.0 / 272.8 277.0 / 272.8 277.0 / 272.8 294.4 / 325.5	300 / 300 300 / 300 300 / 300 300 / 350
												1	15	46.2 / 42.0	— / — 78.9 / 90.0 157.7 / 182.0 236.6 / 273.0	— / — 36 / 36 72 / 72 108 / 108	323.2 / 314.8 323.2 / 314.8 323.2 / 314.8 352.1 / 378.0	350 / 350 350 / 350 350 / 350 400 / 400
													20	59.4 / 54.0	— / — 78.9 / 90.0 157.7 / 182.0 236.6 / 273.0	— / — 36 / 36 72 / 72 108 / 108	339.3 / 328.3 339.3 / 328.3 339.3 / 328.3 368.6 / 393.0	350 / 350 350 / 350 350 / 350 400 / 400
													25	74.8 / 68.0	— / — 78.9 / 90.0 157.7 / 182.0 236.6 / 273.0	— / — 36 / 36 72 / 72 108 / 108	358.5 / 345.8 358.5 / 345.8 358.5 / 345.8 387.9 / 410.5	400 / 400 400 / 400 400 / 400 450 / 450
													30	88.0 / 80.0	— / — 78.9 / 90.0 157.7 / 182.0 236.6 / 273.0	— / — 36 / 36 72 / 72 108 / 108	375.0 / 360.8 375.0 / 360.8 375.0 / 360.8 404.4 / 425.5	450 / 400 450 / 400 450 / 400 450 / 450
										20	59.4 / 54.0	—	—	— / —	— / — 78.9 / 90.0 157.7 / 182.0 236.6 / 273.0	— / — 36 / 36 72 / 72 108 / 108	293.1 / 286.3 293.1 / 286.3 293.1 / 286.3 310.9 / 340.5	350 / 300 350 / 300 350 / 300 350 / 350
												1	15	46.2 / 42.0	— / — 78.9 / 90.0 157.7 / 182.0 236.6 / 273.0	— / — 36 / 36 72 / 72 108 / 108	339.3 / 328.3 339.3 / 328.3 339.3 / 328.3 368.6 / 393.0	350 / 350 350 / 350 350 / 350 400 / 400
													20	59.4 / 54.0	— / — 78.9 / 90.0 157.7 / 182.0 236.6 / 273.0	— / — 36 / 36 72 / 72 108 / 108	352.5 / 340.3 352.5 / 340.3 352.5 / 340.3 385.1 / 408.0	400 / 350 400 / 350 400 / 350 400 / 450
													25	74.8 / 68.0	— / — 78.9 / 90.0 157.7 / 182.0 236.6 / 273.0	— / — 36 / 36 72 / 72 108 / 108	371.7 / 357.8 371.7 / 357.8 371.7 / 357.8 404.4 / 425.5	400 / 400 400 / 400 400 / 400 450 / 450
													30	88.0 / 80.0	— / — 78.9 / 90.0 157.7 / 182.0 236.6 / 273.0	— / — 36 / 36 72 / 72 108 / 108	388.2 / 372.8 388.2 / 372.8 388.2 / 372.8 420.9 / 440.5	450 / 450 450 / 450 450 / 450 450 / 500
										25	74.8 / 68.0	—	—	— / —	— / — 78.9 / 90.0 157.7 / 182.0 236.6 / 273.0	— / — 36 / 36 72 / 72 108 / 108	312.3 / 303.8 312.3 / 303.8 312.3 / 303.8 330.1 / 358.0	350 / 350 350 / 350 350 / 350 400 / 400
												1	15	46.2 / 42.0	— / — 78.9 / 90.0 157.7 / 182.0 236.6 / 273.0	— / — 36 / 36 72 / 72 108 / 108	358.5 / 345.8 358.5 / 345.8 358.5 / 345.8 387.9 / 410.5	400 / 400 400 / 400 400 / 400 450 / 450
													20	59.4 / 54.0	— / — 78.9 / 90.0 157.7 / 182.0 236.6 / 273.0	— / — 36 / 36 72 / 72 108 / 108	371.7 / 357.8 371.7 / 357.8 371.7 / 357.8 404.4 / 425.5	400 / 400 400 / 400 400 / 400 450 / 450
													25	74.8 / 68.0	— / — 78.9 / 90.0 157.7 / 182.0 236.6 / 273.0	— / — 36 / 36 72 / 72 108 / 108	387.1 / 371.8 387.1 / 371.8 387.1 / 371.8 423.6 / 443.0	450 / 400 450 / 400 450 / 400 450 / 450
													30	88.0 / 80.0	— / — 78.9 / 90.0 157.7 / 182.0 236.6 / 273.0	— / — 36 / 36 72 / 72 108 / 108	403.6 / 386.8 403.6 / 386.8 403.6 / 386.8 440.1 / 458.0	450 / 450 450 / 450 450 / 450 500 / 500

See page 169 for legend and notes.

Table 22 — Electrical Data — 50P055 Units with Optional Return Fan (cont)

208/230-3-60 (V-Ph-Hz) (cont)

VOLTAGE RANGE		COMPRESSOR						CONDENSER FAN MOTOR		EVAPORATOR FAN MOTOR		RETURN FAN			OPTIONAL ELECTRIC HEAT		POWER SUPPLY	
		No. A1			No. B1													
Min	Max	Qty	RLA (ea)	LRA (ea)	Qty	RLA (ea)	LRA (ea)	Qty	FLA	Hp	FLA	Qty	Hp (ea)	FLA (ea)	FLA	kW	MCA	FUSE OR HACR BRKR*
187	253	2	48.1	245	2	48.1	245	4	6.6 (ea)	30	88 / 80	—	—	— / —	— / — 78.9 / 90.0 157.7 / 182.0 236.6 / 273.0	— / — 36 / 36 72 / 72 108 / 108	328.8 / 318.8 328.8 / 318.8 328.8 / 318.8 346.6 / 373.0	400 / 350 400 / 350 400 / 350 400 / 450
												1	15	46.2 / 42.0	— / — 78.9 / 90.0 157.7 / 182.0 236.6 / 273.0	— / — 36 / 36 72 / 72 108 / 108	375.0 / 360.8 375.0 / 360.8 375.0 / 360.8 404.4 / 425.5	450 / 400 450 / 400 450 / 400 450 / 450
													20	59.4 / 54.0	— / — 78.9 / 90.0 157.7 / 182.0 236.6 / 273.0	— / — 36 / 36 72 / 72 108 / 108	388.2 / 372.8 388.2 / 372.8 388.2 / 372.8 420.9 / 440.5	450 / 450 450 / 450 450 / 450 450 / 500
													25	74.8 / 68.0	— / — 78.9 / 90.0 157.7 / 182.0 236.6 / 273.0	— / — 36 / 36 72 / 72 108 / 108	403.6 / 386.8 403.6 / 386.8 403.6 / 386.8 440.1 / 458.0	450 / 450 450 / 450 450 / 450 500 / 500
													30	88.0 / 80.0	— / — 78.9 / 90.0 157.7 / 182.0 236.6 / 273.0	— / — 36 / 36 72 / 72 108 / 108	416.8 / 398.8 416.8 / 398.8 416.8 / 398.8 456.6 / 473.0	500 / 450 500 / 450 500 / 450 500 / 500
										40	114 / 104	—	—	— / —	— / — 78.9 / 90.0 157.7 / 182.0 236.6 / 273.0	— / — 36 / 36 72 / 72 108 / 108	361.3 / 348.8 361.3 / 348.8 361.3 / 348.8 379.1 / 403.0	450 / 450 450 / 450 450 / 450 450 / 500
												1	15	46.2 / 42.0	— / — 78.9 / 90.0 157.7 / 182.0 236.6 / 273.0	— / — 36 / 36 72 / 72 108 / 108	407.5 / 390.8 407.5 / 390.8 407.5 / 390.8 436.9 / 455.5	500 / 450 500 / 450 500 / 450 500 / 500
													20	59.4 / 54.0	— / — 78.9 / 90.0 157.7 / 182.0 236.6 / 273.0	— / — 36 / 36 72 / 72 108 / 108	420.7 / 402.8 420.7 / 402.8 420.7 / 402.8 453.4 / 470.5	500 / 500 500 / 500 500 / 500 500 / 500
													25	74.8 / 68.0	— / — 78.9 / 90.0 157.7 / 182.0 236.6 / 273.0	— / — 36 / 36 72 / 72 108 / 108	436.1 / 416.8 436.1 / 416.8 436.1 / 416.8 472.6 / 488.0	500 / 500 500 / 500 500 / 500 500 / 500
													30	88.0 / 80.0	— / — 78.9 / 90.0 157.7 / 182.0 236.6 / 273.0	— / — 36 / 36 72 / 72 108 / 108	449.3 / 428.8 449.3 / 428.8 449.3 / 428.8 489.1 / 503.0	500 / 500 500 / 500 500 / 500 500 / 600

See page 169 for legend and notes.

Table 22 — Electrical Data — 50P055 Units with Optional Return Fan (cont)

380-3-60 (V-Ph-Hz)

VOLTAGE RANGE		COMPRESSOR						CONDENSER FAN MOTOR		EVAPORATOR FAN MOTOR		RETURN FAN			OPTIONAL ELECTRIC HEAT		POWER SUPPLY	
		No. A1			No. B1													
Min	Max	Qty	RLA (ea)	LRA (ea)	Qty	RLA (ea)	LRA (ea)	Qty	FLA	Hp	FLA	Qty	Hp (ea)	FLA (ea)	FLA	kW	MCA	FUSE OR HACR BRKR*
342	418	2	23.7	145	2	23.7	145	4	3.9 (ea)	15	24.5	—	—	—	—	—	141.0	150
															38.3	36	141.0	150
															76.8	72	141.0	150
															114.7	108	145.3	150
												1	15	24.5	—	—	165.5	175
															38.3	36	165.5	175
															76.8	72	165.5	175
															114.7	108	176.0	200
													20	30.0	—	—	172.4	200
															38.3	36	172.4	200
															76.8	72	172.4	200
															114.7	108	182.8	200
													25	38.0	—	—	182.4	200
															38.3	36	182.4	200
															76.8	72	182.4	200
															114.7	108	192.8	200
													30	43.5	—	—	189.3	225
															38.3	36	189.3	225
															76.8	72	189.3	225
															114.7	108	199.7	225
										20	30.0	—	—	—	—	—	147.9	175
															38.3	36	147.9	175
															76.8	72	147.9	175
															114.7	108	152.2	175
												1	15	24.5	—	—	172.4	200
															38.3	36	172.4	200
															76.8	72	172.4	200
															114.7	108	182.8	200
													20	30.0	—	—	177.9	200
															38.3	36	177.9	200
															76.8	72	177.9	200
															114.7	108	189.7	200
													25	38.0	—	—	187.9	225
															38.3	36	187.9	225
															76.8	72	187.9	225
															114.7	108	199.7	225
													30	43.5	—	—	194.8	225
															38.3	36	194.8	225
															76.8	72	194.8	225
															114.7	108	206.6	225
										25	38.0	—	—	—	—	—	157.9	175
															38.3	36	157.9	175
															76.8	72	157.9	175
															114.7	108	162.2	200
												1	15	24.5	—	—	182.4	200
															38.3	36	182.4	200
															76.8	72	182.4	200
															114.7	108	192.8	200
													20	30.0	—	—	187.9	225
															38.3	36	187.9	225
															76.8	72	187.9	225
															114.7	108	199.7	225
													25	38.0	—	—	195.9	225
															38.3	36	195.9	225
															76.8	72	195.9	225
															114.7	108	209.7	225
													30	43.5	—	—	202.8	225
															38.3	36	202.8	225
															76.8	72	202.8	225
															114.7	108	216.6	250

See page 169 for legend and notes.

Table 22 — Electrical Data — 50P055 Units with Optional Return Fan (cont)

380-3-60 (V-Ph-Hz) (cont)

VOLTAGE RANGE		COMPRESSOR						CONDENSER FAN MOTOR		EVAPORATOR FAN MOTOR		RETURN FAN			OPTIONAL ELECTRIC HEAT		POWER SUPPLY	
		No. A1			No. B1													
Min	Max	Qty	RLA (ea)	LRA (ea)	Qty	RLA (ea)	LRA (ea)	Qty	FLA	Hp	FLA	Qty	Hp (ea)	FLA (ea)	FLA	kW	MCA	FUSE OR HACR BRKR*
342	418	2	23.7	145	2	23.7	145	4	3.9 (ea)	30	43.5	—	—	—	—	—	164.8	200
															38.3	36	164.8	200
															76.8	72	164.8	200
															114.7	108	169.1	200
												1	15	24.5	—	—	189.3	225
															38.3	36	189.3	225
															76.8	72	189.3	225
															114.7	108	199.7	225
													20	30.0	—	—	194.8	225
															38.3	36	194.8	225
															76.8	72	194.8	225
															114.7	108	206.6	225
													25	38.0	—	—	202.8	225
															38.3	36	202.8	225
															76.8	72	202.8	225
															114.7	108	216.6	250
													30	43.5	—	—	208.3	250
															38.3	36	208.3	250
															76.8	72	208.3	250
															114.7	108	223.5	250
										40	56.2	—	—	—	—	—	180.7	225
															38.3	36	180.7	225
															76.8	72	180.7	225
															114.7	108	185.0	225
												1	15	24.5	—	—	205.2	250
															38.3	36	205.2	250
															76.8	72	205.2	250
															114.7	108	215.6	250
													20	30.0	—	—	210.7	250
															38.3	36	210.7	250
															76.8	72	210.7	250
															114.7	108	222.5	250
													25	38.0	—	—	218.7	250
															38.3	36	218.7	250
															76.8	72	218.7	250
															114.7	108	232.5	250
													30	43.5	—	—	224.2	250
															38.3	36	224.2	250
															76.8	72	224.2	250
															114.7	108	239.3	250

See page 169 for legend and notes.

Table 22 — Electrical Data — 50P055 Units with Optional Return Fan (cont)

460-3-60 (V-Ph-Hz)

VOLTAGE RANGE		COMPRESSOR						CONDENSER FAN MOTOR		EVAPORATOR FAN MOTOR		RETURN FAN			OPTIONAL ELECTRIC HEAT		POWER SUPPLY	
		No. A1			No. B1													
Min	Max	Qty	RLA (ea)	LRA (ea)	Qty	RLA (ea)	LRA (ea)	Qty	FLA	Hp	FLA	Qty	Hp (ea)	FLA (ea)	FLA	kW	MCA	FUSE OR HACR BRKR*
414	508	2	18.6	125	2	18.6	125	4	3.3 (ea)	15	21.0	—	—	—	—	—	113.9	125
															46.3	36	113.9	125
															93.0	72	119.3	125
															139.0	108	165.3	175
												1	15	21.0	—	—	134.9	150
															46.3	36	134.9	150
															93.0	72	145.5	150
															139.0	108	191.5	200
													20	27.0	—	—	142.4	150
															46.3	36	142.4	150
															93.0	72	153.0	175
															139.0	108	199.0	200
													25	34.0	—	—	151.1	175
															46.3	36	151.1	175
															93.0	72	161.8	175
															139.0	108	207.8	225
													30	40.0	—	—	158.6	175
															46.3	36	158.6	175
															93.0	72	169.3	200
															139.0	108	215.3	250
										20	27.0	—	—	—	—	—	121.4	125
															46.3	36	121.4	125
															93.0	72	126.8	150
															139.0	108	172.8	175
												1	15	21.0	—	—	142.4	150
															46.3	36	142.4	150
															93.0	72	153.0	175
															139.0	108	199.0	200
													20	27.0	—	—	148.4	175
															46.3	36	148.4	175
															93.0	72	160.5	175
															139.0	108	206.5	225
													25	34.0	—	—	157.1	175
															46.3	36	157.1	175
															93.0	72	169.3	175
															139.0	108	215.3	225
													30	40.0	—	—	164.6	200
															46.3	36	164.6	200
															93.0	72	176.8	200
															139.0	108	222.8	250
										25	34.0	—	—	—	—	—	130.1	150
															46.3	36	130.1	150
															93.0	72	135.5	150
															139.0	108	181.5	200
												1	15	21.0	—	—	151.1	175
															46.3	36	151.1	175
															93.0	72	161.8	175
															139.0	108	207.8	225
													20	27.0	—	—	157.1	175
															46.3	36	157.1	175
															93.0	72	169.3	175
															139.0	108	215.3	225
													25	34.0	—	—	164.1	175
															46.3	36	164.1	175
															93.0	72	178.0	200
															139.0	108	224.0	225
													30	40.0	—	—	171.6	200
															46.3	36	171.6	200
															93.0	72	185.5	200
															139.0	108	231.5	250

See page 169 for legend and notes.

Table 22 — Electrical Data — 50P055 Units with Optional Return Fan (cont)

460-3-60 (V-Ph-Hz) (cont)

VOLTAGE RANGE		COMPRESSOR						CONDENSER FAN MOTOR		EVAPORATOR FAN MOTOR		RETURN FAN			OPTIONAL ELECTRIC HEAT		POWER SUPPLY	
		No. A1			No. B1													
Min	Max	Qty	RLA (ea)	LRA (ea)	Qty	RLA (ea)	LRA (ea)	Qty	FLA	Hp	FLA	Qty	Hp (ea)	FLA (ea)	FLA	kW	MCA	FUSE OR HACR BRKR*
414	508	2	18.6	125	2	18.6	125	4	3.3 (ea)	30	40.0	—	—	—	—	—	137.6	175
															46.3	36	137.6	175
															93.0	72	143.0	175
															139.0	108	189.0	225
												1	15	21.0	—	—	158.6	175
															46.3	36	158.6	175
															93.0	72	169.3	200
															139.0	108	215.3	250
													20	27.0	—	—	164.6	200
															46.3	36	164.6	200
															93.0	72	176.8	200
															139.0	108	222.8	250
													25	34.0	—	—	171.6	200
															46.3	36	171.6	200
															93.0	72	185.5	200
															139.0	108	231.5	250
													30	40.0	—	—	177.6	200
															46.3	36	177.6	200
															93.0	72	193.0	200
															139.0	108	239.0	250
										40	52.0	—	—	—	—	—	152.6	200
															46.3	36	152.6	200
															93.0	72	158.0	200
															139.0	108	204.0	250
												1	15	21.0	—	—	173.6	225
															46.3	36	173.6	225
															93.0	72	184.3	225
															139.0	108	230.3	250
													20	27.0	—	—	179.6	225
															46.3	36	179.6	225
															93.0	72	191.8	225
															139.0	108	237.8	250
													25	34.0	—	—	186.6	225
															46.3	36	186.6	225
															93.0	72	200.5	225
															139.0	108	246.5	250
													30	40.0	—	—	192.6	225
															46.3	36	192.6	225
															93.0	72	208.0	250
															139.0	108	254.0	300

See page 169 for legend and notes.

Table 22 — Electrical Data — 50P055 Units with Optional Return Fan (cont)

575-3-60 (V-Ph-Hz)

VOLTAGE RANGE		COMPRESSOR						CONDENSER FAN MOTOR		EVAPORATOR FAN MOTOR		RETURN FAN			OPTIONAL ELECTRIC HEAT		POWER SUPPLY	
		No. A1			No. B1													
Min	Max	Qty	RLA (ea)	LRA (ea)	Qty	RLA (ea)	LRA (ea)	Qty	FLA	Hp	FLA	Qty	Hp (ea)	FLA (ea)	FLA	kW	MCA	FUSE OR HACR BRKR*
518	632	2	14.7	100	2	14.7	100	4	2.6 (ea)	15	17.0	—	—	—	—	—	90.5	100
															36.0	36	90.5	100
															72.0	72	93.3	110
															108.0	108	129.3	150
												1	15	17.0	—	—	107.5	110
															36.0	36	107.5	110
															72.0	72	114.5	125
															108.0	108	150.5	175
													20	22.0	—	—	113.7	125
															36.0	36	113.7	125
															72.0	72	120.8	125
															108.0	108	156.8	175
													25	27.0	—	—	120.0	125
															36.0	36	120.0	125
															72.0	72	127.0	150
															108.0	108	163.0	175
													30	32.0	—	—	126.2	150
															36.0	36	126.2	150
															72.0	72	133.3	150
															108.0	108	169.3	175
										20	22.0	—	—	—	—	—	96.7	110
															36.0	36	96.7	110
															72.0	72	99.5	110
															108.0	108	135.5	150
												1	15	17.0	—	—	113.7	125
															36.0	36	113.7	125
															72.0	72	120.8	125
															108.0	108	156.8	175
													20	22.0	—	—	118.7	125
															36.0	36	118.7	125
															72.0	72	127.0	150
															108.0	108	163.0	175
													25	27.0	—	—	125.0	150
															36.0	36	125.0	150
															72.0	72	133.3	150
															108.0	108	169.3	175
													30	32.0	—	—	131.2	150
															36.0	36	131.2	150
															72.0	72	139.5	150
															108.0	108	175.5	200
										25	27.0	—	—	—	—	—	103.0	125
															36.0	36	103.0	125
															72.0	72	105.8	125
															108.0	108	141.8	150
												1	15	17.0	—	—	120.0	125
															36.0	36	120.0	125
															72.0	72	127.0	150
															108.0	108	163.0	175
													20	22.0	—	—	125.0	150
															36.0	36	125.0	150
															72.0	72	133.3	150
															108.0	108	169.3	175
													25	27.0	—	—	130.0	150
															36.0	36	130.0	150
															72.0	72	139.5	150
															108.0	108	175.5	200
													30	32.0	—	—	136.2	150
															36.0	36	136.2	150
															72.0	72	145.8	150
															108.0	108	181.8	200

See page 169 for legend and notes.

Table 22 — Electrical Data — 50P055 Units with Optional Return Fan (cont)

575-3-60 (V-Ph-Hz) (cont)

VOLTAGE RANGE		COMPRESSOR						CONDENSER FAN MOTOR		EVAPORATOR FAN MOTOR		RETURN FAN			OPTIONAL ELECTRIC HEAT		POWER SUPPLY	
		No. A1			No. B1													
Min	Max	Qty	RLA (ea)	LRA (ea)	Qty	RLA (ea)	LRA (ea)	Qty	FLA	Hp	FLA	Qty	Hp (ea)	FLA (ea)	FLA	kW	MCA	FUSE OR HACR BRKR*
518	632	2	14.7	100	2	14.7	100	4	2.6 (ea)	30	32.0	—	—	—	—	—	109.2	125
															36.0	36	109.2	125
															72.0	72	112.0	125
															108.0	108	148.0	175
												1	15	17.0	—	—	126.2	150
															36.0	36	126.2	150
															72.0	72	133.3	150
															108.0	108	169.3	175
													20	22.0	—	—	131.2	150
															36.0	36	131.2	150
															72.0	72	139.5	150
															108.0	108	175.5	200
													25	27.0	—	—	136.2	150
															36.0	36	136.2	150
															72.0	72	145.8	150
															108.0	108	181.8	200
													30	32.0	—	—	141.2	150
															36.0	36	141.2	150
															72.0	72	152.0	175
															108.0	108	188.0	200
										40	41.0	—	—	—	—	—	120.5	150
															36.0	36	120.5	150
															72.0	72	123.3	150
															108.0	108	159.3	200
												1	15	17.0	—	—	137.5	175
															36.0	36	137.5	175
															72.0	72	144.5	175
															108.0	108	180.5	200
													20	22.0	—	—	142.5	175
															36.0	36	142.5	175
															72.0	72	150.8	175
															108.0	108	186.8	200
													25	27.0	—	—	147.5	175
															36.0	36	147.5	175
															72.0	72	157.0	175
															108.0	108	193.0	225
													30	32.0	—	—	152.5	175
															36.0	36	152.5	175
															72.0	72	163.3	175
															108.0	108	199.3	225

See page 169 for legend and notes.

Table 23 — Electrical Data — 50P 060 Units

208/230-3-60 (V-Ph-Hz)

VOLTAGE RANGE		COMPRESSOR						CONDENSER FAN MOTOR		EVAPORATOR FAN MOTOR		POWER EXHAUST			OPTIONAL ELECTRIC HEAT		POWER SUPPLY	
		No. A1			No. B1													
Min	Max	Qty	RLA (ea)	LRA (ea)	Qty	RLA (ea)	LRA (ea)	Qty	FLA	Hp	FLA	Qty	Hp (ea)	FLA (ea)	FLA	kW	MCA	FUSE OR HACR BRKR*
187	253	2	51.3	300	2	51.3	300	4	6.6 (ea)	15	46.2 / 42.0	—	—	— / —	— 78.9/ 90.0 157.7/ 182.0 236.6/ 273.0	— 36/ 36 72/ 72 108/ 108	290.6/ 286.4 290.6/ 286.4 290.6/ 286.4 294.4/ 325.5	300/ 300 300/ 300 300/ 300 300/ 350
												2	5	16.7 / 15.2	— 78.9/ 90.0 157.7/ 182.0 236.6/ 273.0	— 36/ 36 72/ 72 108/ 108	324.0/ 316.8 324.0/ 316.8 324.0/ 316.8 336.1/ 363.5	350/ 350 350/ 350 350/ 350 350/ 400
													7.5	24.2 / 22.0	— 78.9/ 90.0 157.7/ 182.0 236.6/ 273.0	— 36/ 36 72/ 72 108/ 108	339.0/ 330.4 339.0/ 330.4 339.0/ 330.4 354.9/ 380.5	350/ 350 350/ 350 350/ 350 400/ 400
													10	30.8 / 28.0	— 78.9/ 90.0 157.7/ 182.0 236.6/ 273.0	— 36/ 36 72/ 72 108/ 108	352.2/ 342.4 352.2/ 342.4 352.2/ 342.4 371.4/ 395.5	400/ 350 400/ 350 400/ 350 400/ 400
										20	59.4 / 54.0	—	—	— / —	— 78.9/ 90.0 157.7/ 182.0 236.6/ 273.0	— 36/ 36 72/ 72 108/ 108	305.9/ 299.1 305.9/ 299.1 305.9/ 299.1 310.9/ 340.5	350/ 350 350/ 350 350/ 350 350/ 350
												2	5	16.7 / 15.2	— 78.9/ 90.0 157.7/ 182.0 236.6/ 273.0	— 36/ 36 72/ 72 108/ 108	339.3/ 329.5 339.3/ 329.5 339.3/ 329.5 352.6/ 378.5	350/ 350 350/ 350 350/ 350 400/ 400
													7.5	24.2 / 22.0	— 78.9/ 90.0 157.7/ 182.0 236.6/ 273.0	— 36/ 36 72/ 72 108/ 108	354.3/ 343.1 354.3/ 343.1 354.3/ 343.1 371.4/ 395.5	400/ 350 400/ 350 400/ 350 400/ 400
													10	30.8 / 28.0	— 78.9/ 90.0 157.7/ 182.0 236.6/ 273.0	— 36/ 36 72/ 72 108/ 108	367.5/ 355.1 367.5/ 355.1 367.5/ 355.1 387.9/ 410.5	400/ 400 400/ 400 400/ 400 400/ 450
										25	74.8 / 68.0	—	—	— / —	— 78.9/ 90.0 157.7/ 182.0 236.6/ 273.0	— 36/ 36 72/ 72 108/ 108	325.1/ 316.6 325.1/ 316.6 325.1/ 316.6 330.1/ 358.0	350/ 350 350/ 350 350/ 350 400/ 400
												2	5	16.7 / 15.2	— 78.9/ 90.0 157.7/ 182.0 236.6/ 273.0	— 36/ 36 72/ 72 108/ 108	358.5/ 347.0 358.5/ 347.0 358.5/ 347.0 371.9/ 396.0	400/ 400 400/ 400 400/ 400 400/ 450
													7.5	24.2 / 22.0	— 78.9/ 90.0 157.7/ 182.0 236.6/ 273.0	— 36/ 36 72/ 72 108/ 108	373.5/ 360.6 373.5/ 360.6 373.5/ 360.6 390.6/ 413.0	400/ 400 400/ 400 400/ 400 450/ 450
													10	30.8 / 28.0	— 78.9/ 90.0 157.7/ 182.0 236.6/ 273.0	— 36/ 36 72/ 72 108/ 108	386.7/ 372.6 386.7/ 372.6 386.7/ 372.6 407.1/ 428.0	450/ 400 450/ 400 450/ 400 450/ 450

See page 169 for legend and notes.

Table 23 — Electrical Data — 50P 060 Units (cont)

208/230-3-60 (V-Ph-Hz) (cont)

VOLTAGE RANGE		COMPRESSOR						CONDENSER FAN MOTOR		EVAPORATOR FAN MOTOR		POWER EXHAUST			OPTIONAL ELECTRIC HEAT		POWER SUPPLY	
		No. A1			No. B1													
Min	Max	Qty	RLA (ea)	LRA (ea)	Qty	RLA (ea)	LRA (ea)	Qty	FLA	Hp	FLA	Qty	Hp (ea)	FLA (ea)	FLA	kW	MCA	FUSE OR HACR BRKR*
187	253	2	51.3	300	2	51.3	300	4	6.6 (ea)	30	88 / 80	—	—	— / —	— 78.9/ 90.0 157.7/ 182.0 236.6/ 273.0	— 36/ 36 72/ 72 108/ 108	341.6/ 331.6 341.6/ 331.6 341.6/ 331.6 346.6/ 373.0	400/ 400 400/ 400 400/ 400 400/ 450
												2	5	16.7 / 15.2	— 78.9/ 90.0 157.7/ 182.0 236.6/ 273.0	— 36/ 36 72/ 72 108/ 108	375.0/ 362.0 375.0/ 362.0 375.0/ 362.0 388.4/ 411.0	450/ 400 450/ 400 450/ 400 450/ 450
													7.5	24.2 / 22.0	— 78.9/ 90.0 157.7/ 182.0 236.6/ 273.0	— 36/ 36 72/ 72 108/ 108	390.0/ 375.6 390.0/ 375.6 390.0/ 375.6 407.1/ 428.0	450/ 450 450/ 450 450/ 450 450/ 450
													10	30.8 / 28.0	— 78.9/ 90.0 157.7/ 182.0 236.6/ 273.0	— 36/ 36 72/ 72 108/ 108	403.2/ 387.6 403.2/ 387.6 403.2/ 387.6 423.6/ 443.0	450/ 450 450/ 450 450/ 450 450/ 500
										40	114 / 104	—	—	— / —	— 78.9/ 90.0 157.7/ 182.0 236.6/ 273.0	— 36/ 36 72/ 72 108/ 108	374.1/ 361.6 374.1/ 361.6 374.1/ 361.6 379.1/ 403.0	450/ 450 450/ 450 450/ 450 450/ 500
												2	5	16.7 / 15.2	— 78.9/ 90.0 157.7/ 182.0 236.6/ 273.0	— 36/ 36 72/ 72 108/ 108	407.5/ 392.0 407.5/ 392.0 407.5/ 392.0 420.9/ 441.0	500/ 450 500/ 450 500/ 450 500/ 500
													7.5	24.2 / 22.0	— 78.9/ 90.0 157.7/ 182.0 236.6/ 273.0	— 36/ 36 72/ 72 108/ 108	422.5/ 405.6 422.5/ 405.6 422.5/ 405.6 439.6/ 458.0	500/ 500 500/ 500 500/ 500 500/ 500
													10	30.8 / 28.0	— 78.9/ 90.0 157.7/ 182.0 236.6/ 273.0	— 36/ 36 72/ 72 108/ 108	435.7/ 417.6 435.7/ 417.6 435.7/ 417.6 456.1/ 473.0	500/ 500 500/ 500 500/ 500 500/ 500

See page 169 for legend and notes.

Table 23 — Electrical Data — 50P 060 Units (cont)

380-3-60 (V-Ph-Hz)

VOLTAGE RANGE		COMPRESSOR						CONDENSER FAN MOTOR		EVAPORATOR FAN MOTOR		POWER EXHAUST			OPTIONAL ELECTRIC HEAT		POWER SUPPLY	
		No. A1			No. B1													
Min	Max	Qty	RLA (ea)	LRA (ea)	Qty	RLA (ea)	LRA (ea)	Qty	FLA	Hp	FLA	Qty	Hp (ea)	FLA (ea)	FLA	kW	MCA	FUSE OR HACR BRKR*
342	418	2	26.9	139	2	26.9	139	4	3.9 (ea)	15	24.5	—	—	—	—	—	154.4	175
															38.3	36	154.4	175
															76.8	72	154.4	175
															114.7	108	154.4	175
												2	5	9.1	—	—	172.6	175
															38.3	36	172.6	175
															76.8	72	172.6	175
															114.7	108	172.6	175
													7.5	12.5	—	—	179.4	200
															38.3	36	179.4	200
															76.8	72	179.4	200
															114.7	108	179.4	200
													10	16.7	—	—	187.8	200
															38.3	36	187.8	200
															76.8	72	187.8	200
															114.7	108	187.8	200
										20	30.0	—	—	—	—	—	160.7	175
															38.3	36	160.7	175
															76.8	72	160.7	175
															114.7	108	160.7	175
												2	5	9.1	—	—	178.9	200
															38.3	36	178.9	200
															76.8	72	178.9	200
															114.7	108	178.9	200
													7.5	12.5	—	—	185.7	200
															38.3	36	185.7	200
															76.8	72	185.7	200
															114.7	108	185.7	200
													10	16.7	—	—	194.1	200
															38.3	36	194.1	200
															76.8	72	194.1	200
															114.7	108	194.1	200
										25	38.0	—	—	—	—	—	170.7	200
															38.3	36	170.7	200
															76.8	72	170.7	200
															114.7	108	170.7	200
												2	5	9.1	—	—	188.9	225
															38.3	36	188.9	225
															76.8	72	188.9	225
															114.7	108	188.9	225
													7.5	12.5	—	—	195.7	225
															38.3	36	195.7	225
															76.8	72	195.7	225
															114.7	108	195.7	225
													10	16.7	—	—	204.1	225
															38.3	36	204.1	225
															76.8	72	204.1	225
															114.7	108	204.1	225

See page 169 for legend and notes.

Table 23 — Electrical Data — 50P 060 Units (cont)

380-3-60 (V-Ph-Hz) (cont)

VOLTAGE RANGE		COMPRESSOR						CONDENSER FAN MOTOR		EVAPORATOR FAN MOTOR		POWER EXHAUST			OPTIONAL ELECTRIC HEAT		POWER SUPPLY	
		No. A1			No. B1													
Min	Max	Qty	RLA (ea)	LRA (ea)	Qty	RLA (ea)	LRA (ea)	Qty	FLA	Hp	FLA	Qty	Hp (ea)	FLA (ea)	FLA	kW	MCA	FUSE OR HACR BRKR*
342	418	2	26.9	139	2	26.9	139	4	3.9 (ea)	30	43.5	—	—	—	—	—	177.6	200
															38.3	36	177.6	200
															76.8	72	177.6	200
															114.7	108	177.6	200
												2	5	9.1	—	—	195.8	225
															38.3	36	195.8	225
															76.8	72	195.8	225
															114.7	108	195.8	225
													7.5	12.5	—	—	202.6	225
															38.3	36	202.6	225
															76.8	72	202.6	225
															114.7	108	202.6	225
													10	16.7	—	—	211.0	250
															38.3	36	211.0	250
															76.8	72	211.0	250
															114.7	108	211.0	250
										40	56.2	—	—	—	—	—	193.5	225
															38.3	36	193.5	225
															76.8	72	193.5	225
															114.7	108	193.5	225
												2	5	9.1	—	—	211.7	250
															38.3	36	211.7	250
															76.8	72	211.7	250
															114.7	108	211.7	250
													7.5	12.5	—	—	218.5	250
															38.3	36	218.5	250
															76.8	72	218.5	250
															114.7	108	218.5	250
													10	16.7	—	—	226.9	250
															38.3	36	226.9	250
															76.8	72	226.9	250
															114.7	108	226.9	250

See page 169 for legend and notes.

Table 23 — Electrical Data — 50P 060 Units (cont)

460-3-60 (V-Ph-Hz)

VOLTAGE RANGE		COMPRESSOR						CONDENSER FAN MOTOR		EVAPORATOR FAN MOTOR		POWER EXHAUST			OPTIONAL ELECTRIC HEAT		POWER SUPPLY	
		No. A1			No. B1													
Min	Max	Qty	RLA (ea)	LRA (ea)	Qty	RLA (ea)	LRA (ea)	Qty	FLA	Hp	FLA	Qty	Hp (ea)	FLA (ea)	FLA	kW	MCA	FUSE OR HACR BRKR*
414	508	2	23.1	150	2	23.1	150	4	3.3 (ea)	15	21.0	—	—	—	—	—	132.4	150
															46.3	36	132.4	150
															93.0	72	132.4	150
															139.0	108	165.3	175
												2	5	7.6	—	—	147.6	150
															46.3	36	147.6	150
															93.0	72	147.6	150
															139.0	108	184.3	200
													7.5	11.0	—	—	154.4	175
															46.3	36	154.4	175
															93.0	72	154.4	175
															139.0	108	192.8	200
													10	14.0	—	—	160.4	175
															46.3	36	160.4	175
															93.0	72	160.4	175
															139.0	108	200.3	225
										20	27.0	—	—	—	—	—	139.4	150
															46.3	36	139.4	150
															93.0	72	139.4	150
															139.0	108	172.8	175
												2	5	7.6	—	—	154.6	175
															46.3	36	154.6	175
															93.0	72	154.6	175
															139.0	108	191.8	200
													7.5	11.0	—	—	161.4	175
															46.3	36	161.4	175
															93.0	72	161.4	175
															139.0	108	200.3	225
													10	14.0	—	—	167.4	175
															46.3	36	167.4	175
															93.0	72	167.4	175
															139.0	108	207.8	225
										25	34.0	—	—	—	—	—	148.1	175
															46.3	36	148.1	175
															93.0	72	148.1	175
															139.0	108	181.5	200
												2	5	7.6	—	—	163.3	175
															46.3	36	163.3	175
															93.0	72	163.3	175
															139.0	108	200.5	225
													7.5	11.0	—	—	170.1	200
															46.3	36	170.1	200
															93.0	72	170.1	200
															139.0	108	209.0	225
													10	14.0	—	—	176.1	200
															46.3	36	176.1	200
															93.0	72	176.1	200
															139.0	108	216.5	225

See page 169 for legend and notes.

Table 23 — Electrical Data — 50P 060 Units (cont)

460-3-60 (V-Ph-Hz) (cont)

VOLTAGE RANGE		COMPRESSOR						CONDENSER FAN MOTOR		EVAPORATOR FAN MOTOR		POWER EXHAUST			OPTIONAL ELECTRIC HEAT		POWER SUPPLY	
		No. A1			No. B1													
Min	Max	Qty	RLA (ea)	LRA (ea)	Qty	RLA (ea)	LRA (ea)	Qty	FLA	Hp	FLA	Qty	Hp (ea)	FLA (ea)	FLA	kW	MCA	FUSE OR HACR BRKR*
414	508	2	23.1	150	2	23.1	150	4	3.3 (ea)	30	40.0	—	—	—	—	—	155.6	175
															46.3	36	155.6	175
															93.0	72	155.6	175
															139.0	108	189.0	225
												2	5	7.6	—	—	170.8	200
															46.3	36	170.8	200
															93.0	72	170.8	200
															139.0	108	208.0	225
													7.5	11.0	—	—	177.6	200
															46.3	36	177.6	200
															93.0	72	177.6	200
															139.0	108	216.5	250
													10	14.0	—	—	183.6	200
															46.3	36	183.6	200
															93.0	72	183.6	200
															139.0	108	224.0	250
										40	52.0	—	—	—	—	—	170.6	200
															46.3	36	170.6	200
															93.0	72	170.6	200
															139.0	108	204.0	250
												2	5	7.6	—	—	185.8	225
															46.3	36	185.8	225
															93.0	72	185.8	225
															139.0	108	223.0	250
													7.5	11.0	—	—	192.6	225
															46.3	36	192.6	225
															93.0	72	192.6	225
															139.0	108	231.5	250
													10	14.0	—	—	198.6	250
															46.3	36	198.6	250
															93.0	72	198.6	250
															139.0	108	239.0	250

See page 169 for legend and notes.

Table 23 — Electrical Data — 50P 060 Units (cont)

575-3-60 (V-Ph-Hz)

VOLTAGE RANGE		COMPRESSOR						CONDENSER FAN MOTOR		EVAPORATOR FAN MOTOR		POWER EXHAUST			OPTIONAL ELECTRIC HEAT		POWER SUPPLY	
		No. A1			No. B1													
Min	Max	Qty	RLA (ea)	LRA (ea)	Qty	RLA (ea)	LRA (ea)	Qty	FLA	Hp	FLA	Qty	Hp (ea)	FLA (ea)	FLA	kW	MCA	FUSE OR HACR BRKR*
518	632	2	19.9	109	2	19.9	109	4	2.6 (ea)	15	17.0	—	—	—	—	—	112.0	125
															36.0	36	112.0	125
															72.0	72	112.0	125
															108.0	108	129.3	150
												2	5	6.1	—	—	124.2	125
															36.0	36	124.2	125
															72.0	72	124.2	125
															108.0	108	144.5	150
													7.5	9.0	—	—	130.0	150
															36.0	36	130.0	150
															72.0	72	130.0	150
															108.0	108	151.8	175
													10	11.0	—	—	134.0	150
															36.0	36	134.0	150
															72.0	72	134.0	150
															108.0	108	156.8	175
										20	22.0	—	—	—	—	—	117.5	125
															36.0	36	117.5	125
															72.0	72	117.5	125
															108.0	108	135.5	150
												2	5	6.1	—	—	129.7	150
															36.0	36	129.7	150
															72.0	72	129.7	150
															108.0	108	150.8	175
													7.5	9.0	—	—	135.5	150
															36.0	36	135.5	150
															72.0	72	135.5	150
															108.0	108	158.0	175
													10	11.0	—	—	139.5	150
															36.0	36	139.5	150
															72.0	72	139.5	150
															108.0	108	163.0	175
										25	27.0	—	—	—	—	—	123.8	150
															36.0	36	123.8	150
															72.0	72	123.8	150
															108.0	108	141.8	150
												2	5	6.1	—	—	136.0	150
															36.0	36	136.0	150
															72.0	72	136.0	150
															108.0	108	157.0	175
													7.5	9.0	—	—	141.8	150
															36.0	36	141.8	150
															72.0	72	141.8	150
															108.0	108	164.3	175
													10	11.0	—	—	145.8	150
															36.0	36	145.8	150
															72.0	72	145.8	150
															108.0	108	169.3	175

See page 169 for legend and notes.

Table 23 — Electrical Data — 50P 060 Units (cont)

575-3-60 (V-Ph-Hz) (cont)

VOLTAGE RANGE		COMPRESSOR						CONDENSER FAN MOTOR		EVAPORATOR FAN MOTOR		POWER EXHAUST			OPTIONAL ELECTRIC HEAT		POWER SUPPLY	
		No. A1			No. B1													
Min	Max	Qty	RLA (ea)	LRA (ea)	Qty	RLA (ea)	LRA (ea)	Qty	FLA	Hp	FLA	Qty	Hp (ea)	FLA (ea)	FLA	kW	MCA	FUSE OR HACR BRKR*
518	632	2	19.9	109	2	19.9	109	4	2.6 (ea)	30	32.0	—	—	—	—	—	130.0	150
															36.0	36	130.0	150
															72.0	72	130.0	150
															108.0	108	148.0	175
												2	5	6.1	—	—	142.2	150
															36.0	36	142.2	150
															72.0	72	142.2	150
															108.0	108	163.3	175
													7.5	9.0	—	—	148.0	175
															36.0	36	148.0	175
															72.0	72	148.0	175
															108.0	108	170.5	175
													10	11.0	—	—	152.0	175
															36.0	36	152.0	175
															72.0	72	152.0	175
															108.0	108	175.5	200
										40	41.0	—	—	—	—	—	141.3	175
															36.0	36	141.3	175
															72.0	72	141.3	175
															108.0	108	159.3	200
												2	5	6.1	—	—	153.5	175
															36.0	36	153.5	175
															72.0	72	153.5	175
															108.0	108	174.5	200
													7.5	9.0	—	—	159.3	200
															36.0	36	159.3	200
															72.0	72	159.3	200
															108.0	108	181.8	200
													10	11.0	—	—	163.3	200
															36.0	36	163.3	200
															72.0	72	163.3	200
															108.0	108	186.8	200

See page 169 for legend and notes.

Table 24 — Electrical Data — 50P060 Units with Optional Return Fan

208/230-3-60 (V-Ph-Hz)

VOLTAGE RANGE		COMPRESSOR						CONDENSER FAN MOTOR		EVAPORATOR FAN MOTOR		RETURN FAN			OPTIONAL ELECTRIC HEAT		POWER SUPPLY	
		No. A1			No. B1													
Min	Max	Qty	RLA (ea)	LRA (ea)	Qty	RLA (ea)	LRA (ea)	Qty	FLA	Hp	FLA	Qty	Hp (ea)	FLA (ea)	FLA	kW	MCA	FUSE OR HACR BRKR*
187	253	2	51.3	300	2	51.3	300	4	6.6 (ea)	15	46.2 / 42.0	—	—	— / —	— / — 78.9 / 90.0 157.7 / 182.0 236.6 / 273.0	— / — 36 / 36 72 / 72 108 / 108	290.6 / 286.4 290.6 / 286.4 290.6 / 286.4 294.4 / 325.5	300 / 300 300 / 300 300 / 300 300 / 350
												1	15	46.2 / 42.0	— / — 78.9 / 90.0 157.7 / 182.0 236.6 / 273.0	— / — 36 / 36 72 / 72 108 / 108	336.8 / 328.4 336.8 / 328.4 336.8 / 328.4 352.1 / 378.0	350 / 350 350 / 350 350 / 350 400 / 400
													20	59.4 / 54.0	— / — 78.9 / 90.0 157.7 / 182.0 236.6 / 273.0	— / — 36 / 36 72 / 72 108 / 108	352.1 / 341.1 352.1 / 341.1 352.1 / 341.1 368.6 / 393.0	400 / 350 400 / 350 400 / 350 400 / 400
													25	74.8 / 68.0	— / — 78.9 / 90.0 157.7 / 182.0 236.6 / 273.0	— / — 36 / 36 72 / 72 108 / 108	371.3 / 358.6 371.3 / 358.6 371.3 / 358.6 387.9 / 410.5	400 / 400 400 / 400 400 / 400 450 / 450
													30	88.0 / 80.0	— / — 78.9 / 90.0 157.7 / 182.0 236.6 / 273.0	— / — 36 / 36 72 / 72 108 / 108	387.8 / 373.6 387.8 / 373.6 387.8 / 373.6 404.4 / 425.5	450 / 450 450 / 450 450 / 450 450 / 450
										20	59.4 / 54.0	—	—	— / —	— / — 78.9 / 90.0 157.7 / 182.0 236.6 / 273.0	— / — 36 / 36 72 / 72 108 / 108	305.9 / 299.1 305.9 / 299.1 305.9 / 299.1 310.9 / 340.5	350 / 350 350 / 350 350 / 350 350 / 350
												1	15	46.2 / 42.0	— / — 78.9 / 90.0 157.7 / 182.0 236.6 / 273.0	— / — 36 / 36 72 / 72 108 / 108	352.1 / 341.1 352.1 / 341.1 352.1 / 341.1 368.6 / 393.0	400 / 350 400 / 350 400 / 350 400 / 400
													20	59.4 / 54.0	— / — 78.9 / 90.0 157.7 / 182.0 236.6 / 273.0	— / — 36 / 36 72 / 72 108 / 108	365.3 / 353.1 365.3 / 353.1 365.3 / 353.1 385.1 / 408.0	400 / 400 400 / 400 400 / 400 400 / 450
													25	74.8 / 68.0	— / — 78.9 / 90.0 157.7 / 182.0 236.6 / 273.0	— / — 36 / 36 72 / 72 108 / 108	384.5 / 370.6 384.5 / 370.6 384.5 / 370.6 404.4 / 425.5	450 / 400 450 / 400 450 / 400 450 / 450
													30	88.0 / 80.0	— / — 78.9 / 90.0 157.7 / 182.0 236.6 / 273.0	— / — 36 / 36 72 / 72 108 / 108	401.0 / 385.6 401.0 / 385.6 401.0 / 385.6 420.9 / 440.5	450 / 450 450 / 450 450 / 450 450 / 500
										25	74.8 / 68.0	—	—	— / —	— / — 78.9 / 90.0 157.7 / 182.0 236.6 / 273.0	— / — 36 / 36 72 / 72 108 / 108	325.1 / 316.6 325.1 / 316.6 325.1 / 316.6 330.1 / 358.0	350 / 350 350 / 350 350 / 350 400 / 400
												1	15	46.2 / 42.0	— / — 78.9 / 90.0 157.7 / 182.0 236.6 / 273.0	— / — 36 / 36 72 / 72 108 / 108	371.3 / 358.6 371.3 / 358.6 371.3 / 358.6 387.9 / 410.5	400 / 400 400 / 400 400 / 400 450 / 450
													20	59.4 / 54.0	— / — 78.9 / 90.0 157.7 / 182.0 236.6 / 273.0	— / — 36 / 36 72 / 72 108 / 108	384.5 / 370.6 384.5 / 370.6 384.5 / 370.6 404.4 / 425.5	450 / 400 450 / 400 450 / 400 450 / 450
													25	74.8 / 68.0	— / — 78.9 / 90.0 157.7 / 182.0 236.6 / 273.0	— / — 36 / 36 72 / 72 108 / 108	399.9 / 384.6 399.9 / 384.6 399.9 / 384.6 423.6 / 443.0	450 / 450 450 / 450 450 / 450 450 / 450
													30	88.0 / 80.0	— / — 78.9 / 90.0 157.7 / 182.0 236.6 / 273.0	— / — 36 / 36 72 / 72 108 / 108	416.4 / 399.6 416.4 / 399.6 416.4 / 399.6 440.1 / 458.0	500 / 450 500 / 450 500 / 450 500 / 500

See page 169 for legend and notes.

Table 24 — Electrical Data — 50P060 Units with Optional Return Fan (cont)

208/230-3-60 (V-Ph-Hz) (cont)

VOLTAGE RANGE		COMPRESSOR						CONDENSER FAN MOTOR		EVAPORATOR FAN MOTOR		RETURN FAN			OPTIONAL ELECTRIC HEAT		POWER SUPPLY	
		No. A1			No. B1													
Min	Max	Qty	RLA (ea)	LRA (ea)	Qty	RLA (ea)	LRA (ea)	Qty	FLA	Hp	FLA	Qty	Hp (ea)	FLA (ea)	FLA	kW	MCA	FUSE OR HACR BRKR*
187	253	2	51.3	300	2	51.3	300	4	6.6 (ea)	30	88 / 80	—	—	— / —	— / — 78.9 / 90.0 157.7 / 182.0 236.6 / 273.0	— / — 36 / 36 72 / 72 108 / 108	341.6 / 331.6 341.6 / 331.6 341.6 / 331.6 346.6 / 373.0	400 / 400 400 / 400 400 / 400 400 / 450
												1	15	46.2 / 42.0	— / — 78.9 / 90.0 157.7 / 182.0 236.6 / 273.0	— / — 36 / 36 72 / 72 108 / 108	387.8 / 373.6 387.8 / 373.6 387.8 / 373.6 404.4 / 425.5	450 / 450 450 / 450 450 / 450 450 / 450
													20	59.4 / 54.0	— / — 78.9 / 90.0 157.7 / 182.0 236.6 / 273.0	— / — 36 / 36 72 / 72 108 / 108	401.0 / 385.6 401.0 / 385.6 401.0 / 385.6 420.9 / 440.5	450 / 450 450 / 450 450 / 450 450 / 500
													25	74.8 / 68.0	— / — 78.9 / 90.0 157.7 / 182.0 236.6 / 273.0	— / — 36 / 36 72 / 72 108 / 108	416.4 / 399.6 416.4 / 399.6 416.4 / 399.6 440.1 / 458.0	500 / 450 500 / 450 500 / 450 500 / 500
													30	88.0 / 80.0	— / — 78.9 / 90.0 157.7 / 182.0 236.6 / 273.0	— / — 36 / 36 72 / 72 108 / 108	429.6 / 411.6 429.6 / 411.6 429.6 / 411.6 456.6 / 473.0	500 / 450 500 / 450 500 / 450 500 / 500
										40	114 / 104	—	—	— / —	— / — 78.9 / 90.0 157.7 / 182.0 236.6 / 273.0	— / — 36 / 36 72 / 72 108 / 108	374.1 / 361.6 374.1 / 361.6 374.1 / 361.6 379.1 / 403.0	450 / 450 450 / 450 450 / 450 450 / 500
												1	15	46.2 / 42.0	— / — 78.9 / 90.0 157.7 / 182.0 236.6 / 273.0	— / — 36 / 36 72 / 72 108 / 108	420.3 / 403.6 420.3 / 403.6 420.3 / 403.6 436.9 / 455.5	500 / 500 500 / 500 500 / 500 500 / 500
													20	59.4 / 54.0	— / — 78.9 / 90.0 157.7 / 182.0 236.6 / 273.0	— / — 36 / 36 72 / 72 108 / 108	433.5 / 415.6 433.5 / 415.6 433.5 / 415.6 453.4 / 470.5	500 / 500 500 / 500 500 / 500 500 / 500
													25	74.8 / 68.0	— / — 78.9 / 90.0 157.7 / 182.0 236.6 / 273.0	— / — 36 / 36 72 / 72 108 / 108	448.9 / 429.6 448.9 / 429.6 448.9 / 429.6 472.6 / 488.0	500 / 500 500 / 500 500 / 500 500 / 500
													30	88.0 / 80.0	— / — 78.9 / 90.0 157.7 / 182.0 236.6 / 273.0	— / — 36 / 36 72 / 72 108 / 108	462.1 / 441.6 462.1 / 441.6 462.1 / 441.6 489.1 / 503.0	500 / 500 500 / 500 500 / 500 500 / 600

See page 169 for legend and notes.

Table 24 — Electrical Data — 50P060 Units with Optional Return Fan (cont)

380-3-60 (V-Ph-Hz)

VOLTAGE RANGE		COMPRESSOR						CONDENSER FAN MOTOR		EVAPORATOR FAN MOTOR		RETURN FAN			OPTIONAL ELECTRIC HEAT		POWER SUPPLY	
		No. A1			No. B1													
Min	Max	Qty	RLA (ea)	LRA (ea)	Qty	RLA (ea)	LRA (ea)	Qty	FLA	Hp	FLA	Qty	Hp (ea)	FLA (ea)	FLA	kW	MCA	FUSE OR HACR BRKR*
342	418	2	26.9	139	2	26.9	139	4	3.9 (ea)	15	24.5	—	—	—	—	—	154.4	175
															38.3	36	154.4	175
															76.8	72	154.4	175
															114.7	108	154.4	175
												1	15	24.5	—	—	178.9	200
															38.3	36	178.9	200
															76.8	72	178.9	200
															114.7	108	178.9	200
													20	30.0	—	—	185.2	200
															38.3	36	185.2	200
															76.8	72	185.2	200
															114.7	108	185.2	200
													25	38.0	—	—	195.2	225
															38.3	36	195.2	225
															76.8	72	195.2	225
															114.7	108	195.2	225
													30	43.5	—	—	202.1	225
															38.3	36	202.1	225
															76.8	72	202.1	225
															114.7	108	202.1	225
										20	30.0	—	—	—	—	—	160.7	175
															38.3	36	160.7	175
															76.8	72	160.7	175
															114.7	108	160.7	175
												1	15	24.5	—	—	185.2	200
															38.3	36	185.2	200
															76.8	72	185.2	200
															114.7	108	185.2	200
													20	30.0	—	—	190.7	200
															38.3	36	190.7	200
															76.8	72	190.7	200
															114.7	108	190.7	200
													25	38.0	—	—	200.7	225
															38.3	36	200.7	225
															76.8	72	200.7	225
															114.7	108	200.7	225
													30	43.5	—	—	207.6	250
															38.3	36	207.6	250
															76.8	72	207.6	250
															114.7	108	207.6	250
										25	38.0	—	—	—	—	—	170.7	200
															38.3	36	170.7	200
															76.8	72	170.7	200
															114.7	108	170.7	200
												1	15	24.5	—	—	195.2	225
															38.3	36	195.2	225
															76.8	72	195.2	225
															114.7	108	195.2	225
													20	30.0	—	—	200.7	225
															38.3	36	200.7	225
															76.8	72	200.7	225
															114.7	108	200.7	225
													25	38.0	—	—	208.7	225
															38.3	36	208.7	225
															76.8	72	208.7	225
															114.7	108	209.7	225
													30	43.5	—	—	215.6	250
															38.3	36	215.6	250
															76.8	72	215.6	250
															114.7	108	216.6	250

See page 169 for legend and notes.

Table 24 — Electrical Data — 50P060 Units with Optional Return Fan (cont)

380-3-60 (V-Ph-Hz) (cont)

VOLTAGE RANGE		COMPRESSOR						CONDENSER FAN MOTOR		EVAPORATOR FAN MOTOR		RETURN FAN			OPTIONAL ELECTRIC HEAT		POWER SUPPLY	
		No. A1			No. B1													
Min	Max	Qty	RLA (ea)	LRA (ea)	Qty	RLA (ea)	LRA (ea)	Qty	FLA	Hp	FLA	Qty	Hp (ea)	FLA (ea)	FLA	kW	MCA	FUSE OR HACR BRKR*
342	418	2	26.9	139	2	26.9	139	4	3.9 (ea)	30	43.5	—	—	—	—	—	177.6	200
															38.3	36	177.6	200
															76.8	72	177.6	200
															114.7	108	177.6	200
												1	15	24.5	—	—	202.1	225
															38.3	36	202.1	225
															76.8	72	202.1	225
															114.7	108	202.1	225
													20	30.0	—	—	207.6	250
															38.3	36	207.6	250
															76.8	72	207.6	250
															114.7	108	207.6	250
													25	38.0	—	—	215.6	250
															38.3	36	215.6	250
															76.8	72	215.6	250
															114.7	108	216.6	250
													30	43.5	—	—	221.1	250
															38.3	36	221.1	250
															76.8	72	221.1	250
															114.7	108	223.5	250
										40	56.2	—	—	—	—	—	193.5	225
															38.3	36	193.5	225
															76.8	72	193.5	225
															114.7	108	193.5	225
												1	15	24.5	—	—	218.0	250
															38.3	36	218.0	250
															76.8	72	218.0	250
															114.7	108	218.0	250
													20	30.0	—	—	223.5	250
															38.3	36	223.5	250
															76.8	72	223.5	250
															114.7	108	223.5	250
													25	38.0	—	—	231.5	250
															38.3	36	231.5	250
															76.8	72	231.5	250
															114.7	108	232.5	250
													30	43.5	—	—	237.0	250
															38.3	36	237.0	250
															76.8	72	237.0	250
															114.7	108	239.3	250

See page 169 for legend and notes.

Table 24 — Electrical Data — 50P060 Units with Optional Return Fan (cont)

460-3-60 (V-Ph-Hz)

VOLTAGE RANGE		COMPRESSOR						CONDENSER FAN MOTOR		EVAPORATOR FAN MOTOR		RETURN FAN			OPTIONAL ELECTRIC HEAT		POWER SUPPLY	
		No. A1			No. B1													
Min	Max	Qty	RLA (ea)	LRA (ea)	Qty	RLA (ea)	LRA (ea)	Qty	FLA	Hp	FLA	Qty	Hp (ea)	FLA (ea)	FLA	kW	MCA	FUSE OR HACR BRKR*
414	508	2	23.1	150	2	23.1	150	4	3.3 (ea)	15	21.0	—	—	—	—	—	132.4	150
															46.3	36	132.4	150
															93.0	72	132.4	150
															139.0	108	165.3	175
												1	15	21.0	—	—	153.4	175
															46.3	36	153.4	175
															93.0	72	153.4	175
															139.0	108	191.5	200
													20	27.0	—	—	160.4	175
															46.3	36	160.4	175
															93.0	72	160.4	175
															139.0	108	199.0	200
													25	34.0	—	—	169.1	200
															46.3	36	169.1	200
															93.0	72	169.1	200
															139.0	108	207.8	225
													30	40.0	—	—	176.6	200
															46.3	36	176.6	200
															93.0	72	176.6	200
															139.0	108	215.3	250
										20	27.0	—	—	—	—	—	139.4	150
															46.3	36	139.4	150
															93.0	72	139.4	150
															139.0	108	172.8	175
												1	15	21.0	—	—	160.4	175
															46.3	36	160.4	175
															93.0	72	160.4	175
															139.0	108	199.0	200
													20	27.0	—	—	166.4	175
															46.3	36	166.4	175
															93.0	72	166.4	175
															139.0	108	206.5	225
													25	34.0	—	—	175.1	200
															46.3	36	175.1	200
															93.0	72	175.1	200
															139.0	108	215.3	225
													30	40.0	—	—	182.6	200
															46.3	36	182.6	200
															93.0	72	182.6	200
															139.0	108	222.8	250
										25	34.0	—	—	—	—	—	148.1	175
															46.3	36	148.1	175
															93.0	72	148.1	175
															139.0	108	181.5	200
												1	15	21.0	—	—	169.1	200
															46.3	36	169.1	200
															93.0	72	169.1	200
															139.0	108	207.8	225
													20	27.0	—	—	175.1	200
															46.3	36	175.1	200
															93.0	72	175.1	200
															139.0	108	215.3	225
													25	34.0	—	—	182.1	200
															46.3	36	182.1	200
															93.0	72	182.1	200
															139.0	108	224.0	225
													30	40.0	—	—	189.6	225
															46.3	36	189.6	225
															93.0	72	189.6	225
															139.0	108	231.5	250

See page 169 for legend and notes.

Table 24 — Electrical Data — 50P060 Units with Optional Return Fan (cont)

460-3-60 (V-Ph-Hz) (cont)

VOLTAGE RANGE		COMPRESSOR						CONDENSER FAN MOTOR		EVAPORATOR FAN MOTOR		RETURN FAN			OPTIONAL ELECTRIC HEAT		POWER SUPPLY	
		No. A1			No. B1													
Min	Max	Qty	RLA (ea)	LRA (ea)	Qty	RLA (ea)	LRA (ea)	Qty	FLA	Hp	FLA	Qty	Hp (ea)	FLA (ea)	FLA	kW	MCA	FUSE OR HACR BRKR*
414	508	2	23.1	150	2	23.1	150	4	3.3 (ea)	30	40.0	—	—	—	—	—	155.6	175
															46.3	36	155.6	175
															93.0	72	155.6	175
															139.0	108	189.0	225
												1	15	21.0	—	—	176.6	200
															46.3	36	176.6	200
															93.0	72	176.6	200
															139.0	108	215.3	250
													20	27.0	—	—	182.6	200
															46.3	36	182.6	200
															93.0	72	182.6	200
															139.0	108	222.8	250
													25	34.0	—	—	189.6	225
															46.3	36	189.6	225
															93.0	72	189.6	225
															139.0	108	231.5	250
													30	40.0	—	—	195.6	225
															46.3	36	195.6	225
															93.0	72	195.6	225
															139.0	108	239.0	250
										40	52.0	—	—	—	—	—	170.6	200
															46.3	36	170.6	200
															93.0	72	170.6	200
															139.0	108	204.0	250
												1	15	21.0	—	—	191.6	225
															46.3	36	191.6	225
															93.0	72	191.6	225
															139.0	108	230.3	250
													20	27.0	—	—	197.6	225
															46.3	36	197.6	225
															93.0	72	197.6	225
															139.0	108	237.8	250
													25	34.0	—	—	204.6	250
															46.3	36	204.6	250
															93.0	72	204.6	250
															139.0	108	246.5	250
													30	40.0	—	—	210.6	250
															46.3	36	210.6	250
															93.0	72	210.6	250
															139.0	108	254.0	300

See page 169 for legend and notes.

Table 24 — Electrical Data — 50P060 Units with Optional Return Fan (cont)

575-3-60 (V-Ph-Hz)

VOLTAGE RANGE		COMPRESSOR						CONDENSER FAN MOTOR		EVAPORATOR FAN MOTOR		RETURN FAN			OPTIONAL ELECTRIC HEAT		POWER SUPPLY	
		No. A1			No. B1													
Min	Max	Qty	RLA (ea)	LRA (ea)	Qty	RLA (ea)	LRA (ea)	Qty	FLA	Hp	FLA	Qty	Hp (ea)	FLA (ea)	FLA	kW	MCA	FUSE OR HACR BRKR*
518	632	2	19.9	109	2	19.9	109	4	2.6 (ea)	15	17.0	—	—	—	—	—	112.0	125
															36.0	36	112.0	125
															72.0	72	112.0	125
															108.0	108	129.3	150
												1	15	17.0	—	—	129.0	150
															36.0	36	129.0	150
															72.0	72	129.0	150
															108.0	108	150.5	175
													20	22.0	—	—	134.5	150
															36.0	36	134.5	150
															72.0	72	134.5	150
															108.0	108	156.8	175
													25	27.0	—	—	140.8	150
															36.0	36	140.8	150
															72.0	72	140.8	150
															108.0	108	163.0	175
													30	32.0	—	—	147.0	175
															36.0	36	147.0	175
															72.0	72	147.0	175
															108.0	108	169.3	175
										20	22.0	—	—	—	—	—	117.5	125
															36.0	36	117.5	125
															72.0	72	117.5	125
															108.0	108	135.5	150
												1	15	17.0	—	—	134.5	150
															36.0	36	134.5	150
															72.0	72	134.5	150
															108.0	108	156.8	175
													20	22.0	—	—	139.5	150
															36.0	36	139.5	150
															72.0	72	139.5	150
															108.0	108	163.0	175
													25	27.0	—	—	145.8	150
															36.0	36	145.8	150
															72.0	72	145.8	150
															108.0	108	169.3	175
													30	32.0	—	—	152.0	175
															36.0	36	152.0	175
															72.0	72	152.0	175
															108.0	108	175.5	200
										25	27.0	—	—	—	—	—	123.8	150
															36.0	36	123.8	150
															72.0	72	123.8	150
															108.0	108	141.8	150
												1	15	17.0	—	—	140.8	150
															36.0	36	140.8	150
															72.0	72	140.8	150
															108.0	108	163.0	175
													20	22.0	—	—	145.8	150
															36.0	36	145.8	150
															72.0	72	145.8	150
															108.0	108	169.3	175
													25	27.0	—	—	150.8	175
															36.0	36	150.8	175
															72.0	72	150.8	175
															108.0	108	175.5	200
													30	32.0	—	—	157.0	175
															36.0	36	157.0	175
															72.0	72	157.0	175
															108.0	108	181.8	200

See page 169 for legend and notes.

Table 24 — Electrical Data — 50P060 Units with Optional Return Fan (cont)

575-3-60 (V-Ph-Hz) (cont)

VOLTAGE RANGE		COMPRESSOR						CONDENSER FAN MOTOR		EVAPORATOR FAN MOTOR		RETURN FAN			OPTIONAL ELECTRIC HEAT		POWER SUPPLY	
		No. A1			No. B1													
Min	Max	Qty	RLA (ea)	LRA (ea)	Qty	RLA (ea)	LRA (ea)	Qty	FLA	Hp	FLA	Qty	Hp (ea)	FLA (ea)	FLA	kW	MCA	FUSE OR HACR BRKR*
518	632	2	19.9	109	2	19.9	109	4	2.6 (ea)	30	32.0	—	—	—	—	—	130.0	150
															36.0	36	130.0	150
															72.0	72	130.0	150
															108.0	108	148.0	175
												1	15	17.0	—	—	147.0	175
															36.0	36	147.0	175
															72.0	72	147.0	175
															108.0	108	169.3	175
													20	22.0	—	—	152.0	175
															36.0	36	152.0	175
															72.0	72	152.0	175
															108.0	108	175.5	200
													25	27.0	—	—	157.0	175
															36.0	36	157.0	175
															72.0	72	157.0	175
															108.0	108	181.8	200
													30	32.0	—	—	162.0	175
															36.0	36	162.0	175
															72.0	72	162.0	175
															108.0	108	188.0	200
										40	41.0	—	—	—	—	—	141.3	175
															36.0	36	141.3	175
															72.0	72	141.3	175
															108.0	108	159.3	200
												1	15	17.0	—	—	158.3	175
															36.0	36	158.3	175
															72.0	72	158.3	175
															108.0	108	180.5	200
													20	22.0	—	—	163.3	200
															36.0	36	163.3	200
															72.0	72	163.3	200
															108.0	108	186.8	200
													25	27.0	—	—	168.3	200
															36.0	36	168.3	200
															72.0	72	168.3	200
															108.0	108	193.0	225
													30	32.0	—	—	173.3	200
															36.0	36	173.3	200
															72.0	72	173.3	200
															108.0	108	199.3	225

See page 169 for legend and notes.

Table 25 — Electrical Data — 50P 070 Units

208/230-3-60 (V-Ph-Hz)

VOLTAGE RANGE		COMPRESSOR						CONDENSER FAN MOTOR		EVAPORATOR FAN MOTOR		POWER EXHAUST			OPTIONAL ELECTRIC HEAT		POWER SUPPLY	
		No. A1			No. B1													
Min	Max	Qty	RLA (ea)	LRA (ea)	Qty	RLA (ea)	LRA (ea)	Qty	FLA	Hp	FLA	Qty	Hp (ea)	FLA (ea)	FLA	kW	MCA	FUSE OR HACR BRKR*
187	253	2	51.3	300	2	55.8	340	4	6.6 (ea)	15	46.2 / 42.0	—	—	— / —	— 78.9/ 90.0 157.7/ 182.0 236.6/ 273.0	— 36/ 36 72/ 72 108/ 108	300.8/ 296.6 300.8/ 296.6 300.8/ 296.6 300.8/ 325.5	350/ 350 350/ 350 350/ 350 350/ 350
												2	5	16.7 / 15.2	— 78.9/ 90.0 157.7/ 182.0 236.6/ 273.0	— 36/ 36 72/ 72 108/ 108	334.2/ 327.0 334.2/ 327.0 334.2/ 327.0 336.1/ 363.5	350/ 350 350/ 350 350/ 350 350/ 400
													7.5	24.2 / 22.0	— 78.9/ 90.0 157.7/ 182.0 236.6/ 273.0	— 36/ 36 72/ 72 108/ 108	349.2/ 340.6 349.2/ 340.6 349.2/ 340.6 354.9/ 380.5	400/ 350 400/ 350 400/ 350 400/ 400
													10	30.8 / 28.0	— 78.9/ 90.0 157.7/ 182.0 236.6/ 273.0	— 36/ 36 72/ 72 108/ 108	362.4/ 352.6 362.4/ 352.6 362.4/ 352.6 371.4/ 395.5	400/ 400 400/ 400 400/ 400 400/ 400
										20	59.4 / 54.0	—	—	— / —	— 78.9/ 90.0 157.7/ 182.0 236.6/ 273.0	— 36/ 36 72/ 72 108/ 108	314.9/ 308.6 314.9/ 308.6 314.9/ 308.6 314.9/ 340.5	350/ 350 350/ 350 350/ 350 350/ 350
												2	5	16.7 / 15.2	— 78.9/ 90.0 157.7/ 182.0 236.6/ 273.0	— 36/ 36 72/ 72 108/ 108	348.3/ 339.0 348.3/ 339.0 348.3/ 339.0 352.6/ 378.5	400/ 350 400/ 350 400/ 350 400/ 400
													7.5	24.2 / 22.0	— 78.9/ 90.0 157.7/ 182.0 236.6/ 273.0	— 36/ 36 72/ 72 108/ 108	363.3/ 352.6 363.3/ 352.6 363.3/ 352.6 371.4/ 395.5	400/ 400 400/ 400 400/ 400 400/ 400
													10	30.8 / 28.0	— 78.9/ 90.0 157.7/ 182.0 236.6/ 273.0	— 36/ 36 72/ 72 108/ 108	376.5/ 364.6 376.5/ 364.6 376.5/ 364.6 387.9/ 410.5	400/ 400 400/ 400 400/ 400 400/ 450
										25	74.8 / 68.0	—	—	— / —	— 78.9/ 90.0 157.7/ 182.0 236.6/ 273.0	— 36/ 36 72/ 72 108/ 108	334.1/ 325.6 334.1/ 325.6 334.1/ 325.6 334.1/ 358.0	400/ 350 400/ 350 400/ 350 400/ 400
												2	5	16.7 / 15.2	— 78.9/ 90.0 157.7/ 182.0 236.6/ 273.0	— 36/ 36 72/ 72 108/ 108	367.5/ 356.0 367.5/ 356.0 367.5/ 356.0 371.9/ 396.0	400/ 400 400/ 400 400/ 400 400/ 450
													7.5	24.2 / 22.0	— 78.9/ 90.0 157.7/ 182.0 236.6/ 273.0	— 36/ 36 72/ 72 108/ 108	382.5/ 369.6 382.5/ 369.6 382.5/ 369.6 390.6/ 413.0	450/ 400 450/ 400 450/ 400 450/ 450
													10	30.8 / 28.0	— 78.9/ 90.0 157.7/ 182.0 236.6/ 273.0	— 36/ 36 72/ 72 108/ 108	395.7/ 381.6 395.7/ 381.6 395.7/ 381.6 407.1/ 428.0	450/ 400 450/ 400 450/ 400 450/ 450

See page 169 for legend and notes.

Table 25 — Electrical Data — 50P 070 Units (cont)

208/230-3-60 (V-Ph-Hz) (cont)

VOLTAGE RANGE		COMPRESSOR						CONDENSER FAN MOTOR		EVAPORATOR FAN MOTOR		POWER EXHAUST			OPTIONAL ELECTRIC HEAT		POWER SUPPLY	
		No. A1			No. B1													
Min	Max	Qty	RLA (ea)	LRA (ea)	Qty	RLA (ea)	LRA (ea)	Qty	FLA	Hp	FLA	Qty	Hp (ea)	FLA (ea)	FLA	kW	MCA	FUSE OR HACR BRKR*
187	253	2	51.3	300	2	55.8	340	4	6.6 (ea)	30	88 / 80	—	—	— / —	— 78.9/ 90.0 157.7/ 182.0 236.6/ 273.0	— 36/ 36 72/ 72 108/ 108	350.6/ 340.6 350.6/ 340.6 350.6/ 340.6 350.6/ 373.0	400/ 400 400/ 400 400/ 400 400/ 450
												2	5	16.7 / 15.2	— 78.9/ 90.0 157.7/ 182.0 236.6/ 273.0	— 36/ 36 72/ 72 108/ 108	384.0/ 371.0 384.0/ 371.0 384.0/ 371.0 388.4/ 411.0	450/ 450 450/ 450 450/ 450 450/ 450
													7.5	24.2 / 22.0	— 78.9/ 90.0 157.7/ 182.0 236.6/ 273.0	— 36/ 36 72/ 72 108/ 108	399.0/ 384.6 399.0/ 384.6 399.0/ 384.6 407.1/ 428.0	450/ 450 450/ 450 450/ 450 450/ 450
													10	30.8 / 28.0	— 78.9/ 90.0 157.7/ 182.0 236.6/ 273.0	— 36/ 36 72/ 72 108/ 108	412.2/ 396.6 412.2/ 396.6 412.2/ 396.6 423.6/ 443.0	500/ 450 500/ 450 500/ 450 500/ 500
										40	114 / 104	—	—	— / —	— 78.9/ 90.0 157.7/ 182.0 236.6/ 273.0	— 36/ 36 72/ 72 108/ 108	383.1/ 370.6 383.1/ 370.6 383.1/ 370.6 383.1/ 403.0	450/ 450 450/ 450 450/ 450 450/ 500
												2	5	16.7 / 15.2	— 78.9/ 90.0 157.7/ 182.0 236.6/ 273.0	— 36/ 36 72/ 72 108/ 108	416.5/ 401.0 416.5/ 401.0 416.5/ 401.0 420.9/ 441.0	500/ 500 500/ 500 500/ 500 500/ 500
													7.5	24.2 / 22.0	— 78.9/ 90.0 157.7/ 182.0 236.6/ 273.0	— 36/ 36 72/ 72 108/ 108	431.5/ 414.6 431.5/ 414.6 431.5/ 414.6 439.6/ 458.0	500/ 500 500/ 500 500/ 500 500/ 500
													10	30.8 / 28.0	— 78.9/ 90.0 157.7/ 182.0 236.6/ 273.0	— 36/ 36 72/ 72 108/ 108	444.7/ 426.6 444.7/ 426.6 444.7/ 426.6 456.1/ 473.0	500/ 500 500/ 500 500/ 500 500/ 500

See page 169 for legend and notes.

Table 25 — Electrical Data — 50P 070 Units (cont)

380-3-60 (V-Ph-Hz)

VOLTAGE RANGE		COMPRESSOR						CONDENSER FAN MOTOR		EVAPORATOR FAN MOTOR		POWER EXHAUST			OPTIONAL ELECTRIC HEAT		POWER SUPPLY	
		No. A1			No. B1													
Min	Max	Qty	RLA (ea)	LRA (ea)	Qty	RLA (ea)	LRA (ea)	Qty	FLA	Hp	FLA	Qty	Hp (ea)	FLA (ea)	FLA	kW	MCA	FUSE OR HACR BRKR*
342	418	2	26.9	139	2	34	196	4	3.9 (ea)	15	24.5	—	—	—	—	—	170.4	200
															38.3	36	170.4	200
															76.8	72	170.4	200
															114.7	108	170.4	200
												2	5	9.1	—	—	188.6	200
															38.3	36	188.6	200
															76.8	72	188.6	200
															114.7	108	188.6	200
													7.5	12.5	—	—	195.4	225
															38.3	36	195.4	225
															76.8	72	195.4	225
															114.7	108	195.4	225
													10	16.7	—	—	203.8	225
															38.3	36	203.8	225
															76.8	72	203.8	225
															114.7	108	203.8	225
										20	30.0	—	—	—	—	—	175.9	200
															38.3	36	175.9	200
															76.8	72	175.9	200
															114.7	108	175.9	200
												2	5	9.1	—	—	194.1	225
															38.3	36	194.1	225
															76.8	72	194.1	225
															114.7	108	194.1	225
													7.5	12.5	—	—	200.9	225
															38.3	36	200.9	225
															76.8	72	200.9	225
															114.7	108	200.9	225
													10	16.7	—	—	209.3	225
															38.3	36	209.3	225
															76.8	72	209.3	225
															114.7	108	209.3	225
										25	38.0	—	—	—	—	—	184.9	200
															38.3	36	184.9	200
															76.8	72	184.9	200
															114.7	108	184.9	200
												2	5	9.1	—	—	203.1	225
															38.3	36	203.1	225
															76.8	72	203.1	225
															114.7	108	203.1	225
													7.5	12.5	—	—	209.9	225
															38.3	36	209.9	225
															76.8	72	209.9	225
															114.7	108	209.9	225
													10	16.7	—	—	218.3	250
															38.3	36	218.3	250
															76.8	72	218.3	250
															114.7	108	218.3	250

See page 169 for legend and notes.

Table 25 — Electrical Data — 50P 070 Units (cont)

380-3-60 (V-Ph-Hz) (cont)

VOLTAGE RANGE		COMPRESSOR						CONDENSER FAN MOTOR		EVAPORATOR FAN MOTOR		POWER EXHAUST			OPTIONAL ELECTRIC HEAT		POWER SUPPLY	
		No. A1			No. B1													
Min	Max	Qty	RLA (ea)	LRA (ea)	Qty	RLA (ea)	LRA (ea)	Qty	FLA	Hp	FLA	Qty	Hp (ea)	FLA (ea)	FLA	kW	MCA	FUSE OR HACR BRKR*
342	418	2	26.9	139	2	34	196	4	3.9 (ea)	30	43.5	—	—	—	—	—	191.8	225
															38.3	36	191.8	225
															76.8	72	191.8	225
															114.7	108	191.8	225
												2	5	9.1	—	—	210.0	250
															38.3	36	210.0	250
															76.8	72	210.0	250
															114.7	108	210.0	250
													7.5	12.5	—	—	216.8	250
															38.3	36	216.8	250
															76.8	72	216.8	250
															114.7	108	216.8	250
													10	16.7	—	—	225.2	250
															38.3	36	225.2	250
															76.8	72	225.2	250
															114.7	108	225.2	250
										40	56.2	—	—	—	—	—	207.7	250
															38.3	36	207.7	250
															76.8	72	207.7	250
															114.7	108	207.7	250
												2	5	9.1	—	—	225.9	250
															38.3	36	225.9	250
															76.8	72	225.9	250
															114.7	108	225.9	250
													7.5	12.5	—	—	232.7	250
															38.3	36	232.7	250
															76.8	72	232.7	250
															114.7	108	232.7	250
													10	16.7	—	—	241.1	250
															38.3	36	241.1	250
															76.8	72	241.1	250
															114.7	108	241.1	250

See page 169 for legend and notes.

Table 25 — Electrical Data — 50P 070 Units (cont)

460-3-60 (V-Ph-Hz)

VOLTAGE RANGE		COMPRESSOR						CONDENSER FAN MOTOR		EVAPORATOR FAN MOTOR		POWER EXHAUST			OPTIONAL ELECTRIC HEAT		POWER SUPPLY	
		No. A1			No. B1													
Min	Max	Qty	RLA (ea)	LRA (ea)	Qty	RLA (ea)	LRA (ea)	Qty	FLA	Hp	FLA	Qty	Hp (ea)	FLA (ea)	FLA	kW	MCA	FUSE OR HACR BRKR*
414	508	2	23.1	150	2	26.9	179	4	3.3 (ea)	15	21.0	—	—	—	—	—	140.9	150
															46.3	36	140.9	150
															93.0	72	140.9	150
															139.0	108	165.3	175
												2	5	7.6	—	—	156.1	175
															46.3	36	156.1	175
															93.0	72	156.1	175
															139.0	108	184.3	200
													7.5	11.0	—	—	162.9	175
															46.3	36	162.9	175
															93.0	72	162.9	175
															139.0	108	192.8	200
													10	14.0	—	—	168.9	175
															46.3	36	168.9	175
															93.0	72	168.9	175
															139.0	108	200.3	225
										20	27.0	—	—	—	—	—	147.0	150
															46.3	36	147.0	150
															93.0	72	147.0	150
															139.0	108	172.8	175
												2	5	7.6	—	—	162.2	175
															46.3	36	162.2	175
															93.0	72	162.2	175
															139.0	108	191.8	200
													7.5	11.0	—	—	169.0	175
															46.3	36	169.0	175
															93.0	72	169.0	175
															139.0	108	200.3	225
													10	14.0	—	—	175.0	200
															46.3	36	175.0	200
															93.0	72	175.0	200
															139.0	108	207.8	225
										25	34.0	—	—	—	—	—	155.7	175
															46.3	36	155.7	175
															93.0	72	155.7	175
															139.0	108	181.5	200
												2	5	7.6	—	—	170.9	200
															46.3	36	170.9	200
															93.0	72	170.9	200
															139.0	108	200.5	225
													7.5	11.0	—	—	177.7	200
															46.3	36	177.7	200
															93.0	72	177.7	200
															139.0	108	209.0	225
													10	14.0	—	—	183.7	200
															46.3	36	183.7	200
															93.0	72	183.7	200
															139.0	108	216.5	225

See page 169 for legend and notes.

Table 25 — Electrical Data — 50P 070 Units (cont)

460-3-60 (V-Ph-Hz) (cont)

VOLTAGE RANGE		COMPRESSOR						CONDENSER FAN MOTOR		EVAPORATOR FAN MOTOR		POWER EXHAUST			OPTIONAL ELECTRIC HEAT		POWER SUPPLY	
		No. A1			No. B1													
Min	Max	Qty	RLA (ea)	LRA (ea)	Qty	RLA (ea)	LRA (ea)	Qty	FLA	Hp	FLA	Qty	Hp (ea)	FLA (ea)	FLA	kW	MCA	FUSE OR HACR BRKR*
414	508	2	23.1	150	2	26.9	179	4	3.3 (ea)	30	40.0	—	—	—	—	—	163.2	200
															46.3	36	163.2	200
															93.0	72	163.2	200
															139.0	108	189.0	225
												2	5	7.6	—	—	178.4	200
															46.3	36	178.4	200
															93.0	72	178.4	200
															139.0	108	208.0	225
													7.5	11.0	—	—	185.2	225
															46.3	36	185.2	225
															93.0	72	185.2	225
															139.0	108	216.5	250
													10	14.0	—	—	191.2	225
															46.3	36	191.2	225
															93.0	72	191.2	225
															139.0	108	224.0	250
										40	52.0	—	—	—	—	—	178.2	225
															46.3	36	178.2	225
															93.0	72	178.2	225
															139.0	108	204.0	250
												2	5	7.6	—	—	193.4	225
															46.3	36	193.4	225
															93.0	72	193.4	225
															139.0	108	223.0	250
													7.5	11.0	—	—	200.2	250
															46.3	36	200.2	250
															93.0	72	200.2	250
															139.0	108	231.5	250
													10	14.0	—	—	206.2	250
															46.3	36	206.2	250
															93.0	72	206.2	250
															139.0	108	239.0	250

See page 169 for legend and notes.

Table 25 — Electrical Data — 50P 070 Units (cont)

575-3-60 (V-Ph-Hz)

VOLTAGE RANGE		COMPRESSOR						CONDENSER FAN MOTOR		EVAPORATOR FAN MOTOR		POWER EXHAUST			OPTIONAL ELECTRIC HEAT		POWER SUPPLY	
		No. A1			No. B1													
Min	Max	Qty	RLA (ea)	LRA (ea)	Qty	RLA (ea)	LRA (ea)	Qty	FLA	Hp	FLA	Qty	Hp (ea)	FLA (ea)	FLA	kW	MCA	FUSE OR HACR BRKR*
518	632	2	19.9	109	2	23.7	132	4	2.6 (ea)	15	17.0	—	—	—	—	—	120.5	125
															36.0	36	120.5	125
															72.0	72	120.5	125
															108.0	108	129.3	150
												2	5	6.1	—	—	132.7	150
															36.0	36	132.7	150
															72.0	72	132.7	150
															108.0	108	144.5	150
													7.5	9.0	—	—	138.5	150
															36.0	36	138.5	150
															72.0	72	138.5	150
															108.0	108	151.8	175
													10	11.0	—	—	142.5	150
															36.0	36	142.5	150
															72.0	72	142.5	150
															108.0	108	156.8	175
										20	22.0	—	—	—	—	—	125.5	150
															36.0	36	125.5	150
															72.0	72	125.5	150
															108.0	108	135.5	150
												2	5	6.1	—	—	137.7	150
															36.0	36	137.7	150
															72.0	72	137.7	150
															108.0	108	150.8	175
													7.5	9.0	—	—	143.5	150
															36.0	36	143.5	150
															72.0	72	143.5	150
															108.0	108	158.0	175
													10	11.0	—	—	147.5	150
															36.0	36	147.5	150
															72.0	72	147.5	150
															108.0	108	163.0	175
										25	27.0	—	—	—	—	—	131.4	150
															36.0	36	131.4	150
															72.0	72	131.4	150
															108.0	108	141.8	150
												2	5	6.1	—	—	143.6	150
															36.0	36	143.6	150
															72.0	72	143.6	150
															108.0	108	157.0	175
													7.5	9.0	—	—	149.4	175
															36.0	36	149.4	175
															72.0	72	149.4	175
															108.0	108	164.3	175
													10	11.0	—	—	153.4	175
															36.0	36	153.4	175
															72.0	72	153.4	175
															108.0	108	169.3	175

See page 169 for legend and notes.

Table 25 — Electrical Data — 50P 070 Units (cont)

575-3-60 (V-Ph-Hz) (cont)

VOLTAGE RANGE		COMPRESSOR						CONDENSER FAN MOTOR		EVAPORATOR FAN MOTOR		POWER EXHAUST			OPTIONAL ELECTRIC HEAT		POWER SUPPLY	
		No. A1			No. B1													
Min	Max	Qty	RLA (ea)	LRA (ea)	Qty	RLA (ea)	LRA (ea)	Qty	FLA	Hp	FLA	Qty	Hp (ea)	FLA (ea)	FLA	kW	MCA	FUSE OR HACR BRKR*
518	632	2	19.9	109	2	23.7	132	4	2.6 (ea)	30	32.0	—	—	—	—	—	137.6	150
															36.0	36	137.6	150
															72.0	72	137.6	150
															108.0	108	148.0	175
												2	5	6.1	—	—	149.8	175
															36.0	36	149.8	175
															72.0	72	149.8	175
															108.0	108	163.3	175
													7.5	9.0	—	—	155.6	175
															36.0	36	155.6	175
															72.0	72	155.6	175
															108.0	108	170.5	175
													10	11.0	—	—	159.6	175
															36.0	36	159.6	175
															72.0	72	159.6	175
															108.0	108	175.5	200
										40	41.0	—	—	—	—	—	148.9	175
															36.0	36	148.9	175
															72.0	72	148.9	175
															108.0	108	159.3	200
												2	5	6.1	—	—	161.1	200
															36.0	36	161.1	200
															72.0	72	161.1	200
															108.0	108	174.5	200
													7.5	9.0	—	—	166.9	200
															36.0	36	166.9	200
															72.0	72	166.9	200
															108.0	108	181.8	200
													10	11.0	—	—	170.9	200
															36.0	36	170.9	200
															72.0	72	170.9	200
															108.0	108	186.8	200

See page 169 for legend and notes.

Table 26 — Electrical Data — 50P070 Units with Optional Return Fan

208/230-3-60 (V-Ph-Hz)

VOLTAGE RANGE		COMPRESSOR						CONDENSER FAN MOTOR		EVAPORATOR FAN MOTOR		RETURN FAN			OPTIONAL ELECTRIC HEAT		POWER SUPPLY	
		No. A1			No. B1													
Min	Max	Qty	RLA (ea)	LRA (ea)	Qty	RLA (ea)	LRA (ea)	Qty	FLA	Hp	FLA	Qty	Hp (ea)	FLA (ea)	FLA	kW	MCA	FUSE OR HACR BRKR*
187	253	2	51.3	300	2	55.8	340	4	6.6 (ea)	15	46.2 / 42.0	—	—	— / —	— / — 78.9 / 90.0 157.7 / 182.0 236.6 / 273.0	— / — 36 / 36 72 / 72 108 / 108	300.8 / 296.6 300.8 / 296.6 300.8 / 296.6 300.8 / 325.5	350 / 350 350 / 350 350 / 350 350 / 350
												1	15	46.2 / 42.0	— / — 78.9 / 90.0 157.7 / 182.0 236.6 / 273.0	— / — 36 / 36 72 / 72 108 / 108	347.0 / 338.6 347.0 / 338.6 347.0 / 338.6 352.1 / 378.0	400 / 350 400 / 350 400 / 350 400 / 400
													20	59.4 / 54.0	— / — 78.9 / 90.0 157.7 / 182.0 236.6 / 273.0	— / — 36 / 36 72 / 72 108 / 108	361.1 / 350.6 361.1 / 350.6 361.1 / 350.6 368.6 / 393.0	400 / 400 400 / 400 400 / 400 400 / 400
													25	74.8 / 68.0	— / — 78.9 / 90.0 157.7 / 182.0 236.6 / 273.0	— / — 36 / 36 72 / 72 108 / 108	380.3 / 367.6 380.3 / 367.6 380.3 / 367.6 387.9 / 410.5	450 / 400 450 / 400 450 / 400 450 / 450
													30	88.0 / 80.0	— / — 78.9 / 90.0 157.7 / 182.0 236.6 / 273.0	— / — 36 / 36 72 / 72 108 / 108	396.8 / 382.6 396.8 / 382.6 396.8 / 382.6 404.4 / 425.5	450 / 450 450 / 450 450 / 450 450 / 450
										20	59.4 / 54.0	—	—	— / —	— / — 78.9 / 90.0 157.7 / 182.0 236.6 / 273.0	— / — 36 / 36 72 / 72 108 / 108	314.9 / 308.6 314.9 / 308.6 314.9 / 308.6 314.9 / 340.5	350 / 350 350 / 350 350 / 350 350 / 350
												1	15	46.2 / 42.0	— / — 78.9 / 90.0 157.7 / 182.0 236.6 / 273.0	— / — 36 / 36 72 / 72 108 / 108	361.1 / 350.6 361.1 / 350.6 361.1 / 350.6 368.6 / 393.0	400 / 400 400 / 400 400 / 400 400 / 400
													20	59.4 / 54.0	— / — 78.9 / 90.0 157.7 / 182.0 236.6 / 273.0	— / — 36 / 36 72 / 72 108 / 108	374.3 / 362.6 374.3 / 362.6 374.3 / 362.6 385.1 / 408.0	400 / 400 400 / 400 400 / 400 400 / 450
													25	74.8 / 68.0	— / — 78.9 / 90.0 157.7 / 182.0 236.6 / 273.0	— / — 36 / 36 72 / 72 108 / 108	393.5 / 379.6 393.5 / 379.6 393.5 / 379.6 404.4 / 425.5	450 / 400 450 / 400 450 / 400 450 / 450
													30	88.0 / 80.0	— / — 78.9 / 90.0 157.7 / 182.0 236.6 / 273.0	— / — 36 / 36 72 / 72 108 / 108	410.0 / 394.6 410.0 / 394.6 410.0 / 394.6 420.9 / 440.5	450 / 450 450 / 450 450 / 450 450 / 500
										25	74.8 / 68.0	—	—	— / —	— / — 78.9 / 90.0 157.7 / 182.0 236.6 / 273.0	— / — 36 / 36 72 / 72 108 / 108	334.1 / 325.6 334.1 / 325.6 334.1 / 325.6 334.1 / 358.0	400 / 350 400 / 350 400 / 350 400 / 400
												1	15	46.2 / 42.0	— / — 78.9 / 90.0 157.7 / 182.0 236.6 / 273.0	— / — 36 / 36 72 / 72 108 / 108	380.3 / 367.6 380.3 / 367.6 380.3 / 367.6 387.9 / 410.5	450 / 400 450 / 400 450 / 400 450 / 450
													20	59.4 / 54.0	— / — 78.9 / 90.0 157.7 / 182.0 236.6 / 273.0	— / — 36 / 36 72 / 72 108 / 108	393.5 / 379.6 393.5 / 379.6 393.5 / 379.6 404.4 / 425.5	450 / 400 450 / 400 450 / 400 450 / 450
													25	74.8 / 68.0	— / — 78.9 / 90.0 157.7 / 182.0 236.6 / 273.0	— / — 36 / 36 72 / 72 108 / 108	408.9 / 393.6 408.9 / 393.6 408.9 / 393.6 423.6 / 443.0	450 / 450 450 / 450 450 / 450 450 / 450
													30	88.0 / 80.0	— / — 78.9 / 90.0 157.7 / 182.0 236.6 / 273.0	— / — 36 / 36 72 / 72 108 / 108	425.4 / 408.6 425.4 / 408.6 425.4 / 408.6 440.1 / 458.0	500 / 450 500 / 450 500 / 450 500 / 500

See page 169 for legend and notes.

Table 26 — Electrical Data — 50P070 Units with Optional Return Fan (cont)

208/230-3-60 (V-Ph-Hz) (cont)

VOLTAGE RANGE		COMPRESSOR						CONDENSER FAN MOTOR		EVAPORATOR FAN MOTOR		RETURN FAN			OPTIONAL ELECTRIC HEAT		POWER SUPPLY	
		No. A1			No. B1													
Min	Max	Qty	RLA (ea)	LRA (ea)	Qty	RLA (ea)	LRA (ea)	Qty	FLA	Hp	FLA	Qty	Hp (ea)	FLA (ea)	FLA	kW	MCA	FUSE OR HACR BRKR*
187	253	2	51.3	300	2	55.8	340	4	6.6 (ea)	30	88 / 80	—	—	— / —	— / — 78.9 / 90.0 157.7 / 182.0 236.6 / 273.0	— / — 36 / 36 72 / 72 108 / 108	350.6 / 340.6 350.6 / 340.6 350.6 / 340.6 350.6 / 373.0	400 / 400 400 / 400 400 / 400 400 / 450
												1	15	46.2 / 42.0	— / — 78.9 / 90.0 157.7 / 182.0 236.6 / 273.0	— / — 36 / 36 72 / 72 108 / 108	396.8 / 382.6 396.8 / 382.6 396.8 / 382.6 404.4 / 425.5	450 / 450 450 / 450 450 / 450 450 / 450
													20	59.4 / 54.0	— / — 78.9 / 90.0 157.7 / 182.0 236.6 / 273.0	— / — 36 / 36 72 / 72 108 / 108	410.0 / 394.6 410.0 / 394.6 410.0 / 394.6 420.9 / 440.5	450 / 450 450 / 450 450 / 450 450 / 500
													25	74.8 / 68.0	— / — 78.9 / 90.0 157.7 / 182.0 236.6 / 273.0	— / — 36 / 36 72 / 72 108 / 108	425.4 / 408.6 425.4 / 408.6 425.4 / 408.6 440.1 / 458.0	500 / 450 500 / 450 500 / 450 500 / 500
													30	88.0 / 80.0	— / — 78.9 / 90.0 157.7 / 182.0 236.6 / 273.0	— / — 36 / 36 72 / 72 108 / 108	438.6 / 420.6 438.6 / 420.6 438.6 / 420.6 456.6 / 473.0	500 / 500 500 / 500 500 / 500 500 / 500
										40	114 / 104	—	—	— / —	— / — 78.9 / 90.0 157.7 / 182.0 236.6 / 273.0	— / — 36 / 36 72 / 72 108 / 108	383.1 / 370.6 383.1 / 370.6 383.1 / 370.6 383.1 / 403.0	450 / 450 450 / 450 450 / 450 450 / 500
												1	15	46.2 / 42.0	— / — 78.9 / 90.0 157.7 / 182.0 236.6 / 273.0	— / — 36 / 36 72 / 72 108 / 108	429.3 / 412.6 429.3 / 412.6 429.3 / 412.6 436.9 / 455.5	500 / 500 500 / 500 500 / 500 500 / 500
													20	59.4 / 54.0	— / — 78.9 / 90.0 157.7 / 182.0 236.6 / 273.0	— / — 36 / 36 72 / 72 108 / 108	442.5 / 424.6 442.5 / 424.6 442.5 / 424.6 453.4 / 470.5	500 / 500 500 / 500 500 / 500 500 / 500
													25	74.8 / 68.0	— / — 78.9 / 90.0 157.7 / 182.0 236.6 / 273.0	— / — 36 / 36 72 / 72 108 / 108	457.9 / 438.6 457.9 / 438.6 457.9 / 438.6 472.6 / 488.0	500 / 500 500 / 500 500 / 500 500 / 500
													30	88.0 / 80.0	— / — 78.9 / 90.0 157.7 / 182.0 236.6 / 273.0	— / — 36 / 36 72 / 72 108 / 108	471.1 / 450.6 471.1 / 450.6 471.1 / 450.6 489.1 / 503.0	500 / 500 500 / 500 500 / 500 500 / 600

See page 169 for legend and notes.

Table 26 — Electrical Data — 50P070 Units with Optional Return Fan (cont)

380-3-60 (V-Ph-Hz)

VOLTAGE RANGE		COMPRESSOR						CONDENSER FAN MOTOR		EVAPORATOR FAN MOTOR		RETURN FAN			OPTIONAL ELECTRIC HEAT		POWER SUPPLY	
		No. A1			No. B1													
Min	Max	Qty	RLA (ea)	LRA (ea)	Qty	RLA (ea)	LRA (ea)	Qty	FLA	Hp	FLA	Qty	Hp (ea)	FLA (ea)	FLA	kW	MCA	FUSE OR HACR BRKR*
342	418	2	26.9	139	2	34	196	4	3.9 (ea)	15	24.5	—	—	—	—	—	170.4	200
															38.3	36	170.4	200
															76.8	72	170.4	200
															114.7	108	170.4	200
												1	15	24.5	—	—	194.9	225
															38.3	36	194.9	225
															76.8	72	194.9	225
															114.7	108	194.9	225
													20	30.0	—	—	200.4	225
															38.3	36	200.4	225
															76.8	72	200.4	225
															114.7	108	200.4	225
													25	38.0	—	—	209.4	225
															38.3	36	209.4	225
															76.8	72	209.4	225
															114.7	108	209.4	225
													30	43.5	—	—	216.3	250
															38.3	36	216.3	250
															76.8	72	216.3	250
															114.7	108	216.3	250
										20	30.0	—	—	—	—	—	175.9	200
															38.3	36	175.9	200
															76.8	72	175.9	200
															114.7	108	175.9	200
												1	15	24.5	—	—	200.4	225
															38.3	36	200.4	225
															76.8	72	200.4	225
															114.7	108	200.4	225
													20	30.0	—	—	205.9	225
															38.3	36	205.9	225
															76.8	72	205.9	225
															114.7	108	205.9	225
													25	38.0	—	—	214.9	250
															38.3	36	214.9	250
															76.8	72	214.9	250
															114.7	108	214.9	250
													30	43.5	—	—	221.8	250
															38.3	36	221.8	250
															76.8	72	221.8	250
															114.7	108	221.8	250
										25	38.0	—	—	—	—	—	184.9	200
															38.3	36	184.9	200
															76.8	72	184.9	200
															114.7	108	184.9	200
												1	15	24.5	—	—	209.4	225
															38.3	36	209.4	225
															76.8	72	209.4	225
															114.7	108	209.4	225
													20	30.0	—	—	214.9	250
															38.3	36	214.9	250
															76.8	72	214.9	250
															114.7	108	214.9	250
													25	38.0	—	—	222.9	250
															38.3	36	222.9	250
															76.8	72	222.9	250
															114.7	108	222.9	250
													30	43.5	—	—	229.8	250
															38.3	36	229.8	250
															76.8	72	229.8	250
															114.7	108	229.8	250

See page 169 for legend and notes.

Table 26 — Electrical Data — 50P070 Units with Optional Return Fan (cont)

380-3-60 (V-Ph-Hz) (cont)

VOLTAGE RANGE		COMPRESSOR						CONDENSER FAN MOTOR		EVAPORATOR FAN MOTOR		RETURN FAN			OPTIONAL ELECTRIC HEAT		POWER SUPPLY	
		No. A1			No. B1													
Min	Max	Qty	RLA (ea)	LRA (ea)	Qty	RLA (ea)	LRA (ea)	Qty	FLA	Hp	FLA	Qty	Hp (ea)	FLA (ea)	FLA	kW	MCA	FUSE OR HACR BRKR*
342	418	2	26.9	139	2	34	196	4	3.9 (ea)	30	43.5	—	—	—	—	—	191.8	225
															38.3	36	191.8	225
															76.8	72	191.8	225
															114.7	108	191.8	225
												1	15	24.5	—	—	216.3	250
															38.3	36	216.3	250
															76.8	72	216.3	250
															114.7	108	216.3	250
													20	30.0	—	—	221.8	250
															38.3	36	221.8	250
															76.8	72	221.8	250
															114.7	108	221.8	250
													25	38.0	—	—	229.8	250
															38.3	36	229.8	250
															76.8	72	229.8	250
															114.7	108	229.8	250
													30	43.5	—	—	235.3	250
															38.3	36	235.3	250
															76.8	72	235.3	250
															114.7	108	235.3	250
										40	56.2	—	—	—	—	—	207.7	250
															38.3	36	207.7	250
															76.8	72	207.7	250
															114.7	108	207.7	250
												1	15	24.5	—	—	232.2	250
															38.3	36	232.2	250
															76.8	72	232.2	250
															114.7	108	232.2	250
													20	30.0	—	—	237.7	250
															38.3	36	237.7	250
															76.8	72	237.7	250
															114.7	108	237.7	250
													25	38.0	—	—	245.7	300
															38.3	36	245.7	300
															76.8	72	245.7	300
															114.7	108	245.7	300
													30	43.5	—	—	251.2	300
															38.3	36	251.2	300
															76.8	72	251.2	300
															114.7	108	251.2	300

See page 169 for legend and notes.

Table 26 — Electrical Data — 50P070 Units with Optional Return Fan (cont)

460-3-60 (V-Ph-Hz)

VOLTAGE RANGE		COMPRESSOR						CONDENSER FAN MOTOR		EVAPORATOR FAN MOTOR		RETURN FAN			OPTIONAL ELECTRIC HEAT		POWER SUPPLY	
		No. A1			No. B1													
Min	Max	Qty	RLA (ea)	LRA (ea)	Qty	RLA (ea)	LRA (ea)	Qty	FLA	Hp	FLA	Qty	Hp (ea)	FLA (ea)	FLA	kW	MCA	FUSE OR HACR BRKR*
414	508	2	23.1	150	2	26.9	179	4	3.3 (ea)	15	21.0	—	—	—	—	—	140.9	150
															46.3	36	140.9	150
															93.0	72	140.9	150
															139.0	108	165.3	175
												1	15	21.0	—	—	161.9	175
															46.3	36	161.9	175
															93.0	72	161.9	175
															139.0	108	191.5	200
													20	27.0	—	—	168.0	175
															46.3	36	168.0	175
															93.0	72	168.0	175
															139.0	108	199.0	200
													25	34.0	—	—	176.7	200
															46.3	36	176.7	200
															93.0	72	176.7	200
															139.0	108	207.8	225
													30	40.0	—	—	184.2	200
															46.3	36	184.2	200
															93.0	72	184.2	200
															139.0	108	215.3	250
										20	27.0	—	—	—	—	—	147.0	150
															46.3	36	147.0	150
															93.0	72	147.0	150
															139.0	108	172.8	175
												1	15	21.0	—	—	168.0	175
															46.3	36	168.0	175
															93.0	72	168.0	175
															139.0	108	199.0	200
													20	27.0	—	—	174.0	200
															46.3	36	174.0	200
															93.0	72	174.0	200
															139.0	108	206.5	225
													25	34.0	—	—	182.7	200
															46.3	36	182.7	200
															93.0	72	182.7	200
															139.0	108	215.3	225
													30	40.0	—	—	190.2	225
															46.3	36	190.2	225
															93.0	72	190.2	225
															139.0	108	222.8	250
										25	34.0	—	—	—	—	—	155.7	175
															46.3	36	155.7	175
															93.0	72	155.7	175
															139.0	108	181.5	200
												1	15	21.0	—	—	176.7	200
															46.3	36	176.7	200
															93.0	72	176.7	200
															139.0	108	207.8	225
													20	27.0	—	—	182.7	200
															46.3	36	182.7	200
															93.0	72	182.7	200
															139.0	108	215.3	225
													25	34.0	—	—	189.7	200
															46.3	36	189.7	200
															93.0	72	189.7	200
															139.0	108	224.0	225
													30	40.0	—	—	197.2	225
															46.3	36	197.2	225
															93.0	72	197.2	225
															139.0	108	231.5	250

See page 169 for legend and notes.

Table 26 — Electrical Data — 50P070 Units with Optional Return Fan (cont)

460-3-60 (V-Ph-Hz) (cont)

VOLTAGE RANGE		COMPRESSOR						CONDENSER FAN MOTOR		EVAPORATOR FAN MOTOR		RETURN FAN			OPTIONAL ELECTRIC HEAT		POWER SUPPLY	
		No. A1			No. B1													
Min	Max	Qty	RLA (ea)	LRA (ea)	Qty	RLA (ea)	LRA (ea)	Qty	FLA	Hp	FLA	Qty	Hp (ea)	FLA (ea)	FLA	kW	MCA	FUSE OR HACR BRKR*
414	508	2	23.1	150	2	26.9	179	4	3.3 (ea)	30	40.0	—	—	—	—	—	163.2	200
															46.3	36	163.2	200
															93.0	72	163.2	200
															139.0	108	189.0	225
												1	15	21.0	—	—	184.2	200
															46.3	36	184.2	200
															93.0	72	184.2	200
															139.0	108	215.3	250
													20	27.0	—	—	190.2	225
															46.3	36	190.2	225
															93.0	72	190.2	225
															139.0	108	222.8	250
													25	34.0	—	—	197.2	225
															46.3	36	197.2	225
															93.0	72	197.2	225
															139.0	108	231.5	250
													30	40.0	—	—	203.2	225
															46.3	36	203.2	225
															93.0	72	203.2	225
															139.0	108	239.0	250
										40	52.0	—	—	—	—	—	178.2	225
															46.3	36	178.2	225
															93.0	72	178.2	225
															139.0	108	204.0	250
												1	15	21.0	—	—	199.2	250
															46.3	36	199.2	250
															93.0	72	199.2	250
															139.0	108	230.3	250
													20	27.0	—	—	205.2	250
															46.3	36	205.2	250
															93.0	72	205.2	250
															139.0	108	237.8	250
													25	34.0	—	—	212.2	250
															46.3	36	212.2	250
															93.0	72	212.2	250
															139.0	108	246.5	250
													30	40.0	—	—	218.2	250
															46.3	36	218.2	250
															93.0	72	218.2	250
															139.0	108	254.0	300

See page 169 for legend and notes.

Table 26 — Electrical Data — 50P070 Units with Optional Return Fan (cont)

575-3-60 (V-Ph-Hz)

VOLTAGE RANGE		COMPRESSOR						CONDENSER FAN MOTOR		EVAPORATOR FAN MOTOR		RETURN FAN			OPTIONAL ELECTRIC HEAT		POWER SUPPLY	
		No. A1			No. B1													
Min	Max	Qty	RLA (ea)	LRA (ea)	Qty	RLA (ea)	LRA (ea)	Qty	FLA	Hp	FLA	Qty	Hp (ea)	FLA (ea)	FLA	kW	MCA	FUSE OR HACR BRKR*
518	632	2	19.9	109	2	23.7	132	4	2.6 (ea)	15	17.0	—	—	—	—	—	120.5	125
															36.0	36	120.5	125
															72.0	72	120.5	125
															108.0	108	129.3	150
												1	15	17.0	—	—	137.5	150
															36.0	36	137.5	150
															72.0	72	137.5	150
															108.0	108	150.5	175
													20	22.0	—	—	142.5	150
															36.0	36	142.5	150
															72.0	72	142.5	150
															108.0	108	156.8	175
													25	27.0	—	—	148.4	175
															36.0	36	148.4	175
															72.0	72	148.4	175
															108.0	108	163.0	175
													30	32.0	—	—	154.6	175
															36.0	36	154.6	175
															72.0	72	154.6	175
															108.0	108	169.3	175
										20	22.0	—	—	—	—	—	125.5	150
															36.0	36	125.5	150
															72.0	72	125.5	150
															108.0	108	135.5	150
												1	15	17.0	—	—	142.5	150
															36.0	36	142.5	150
															72.0	72	142.5	150
															108.0	108	156.8	175
													20	22.0	—	—	147.5	150
															36.0	36	147.5	150
															72.0	72	147.5	150
															108.0	108	163.0	175
													25	27.0	—	—	153.4	175
															36.0	36	153.4	175
															72.0	72	153.4	175
															108.0	108	169.3	175
													30	32.0	—	—	159.6	175
															36.0	36	159.6	175
															72.0	72	159.6	175
															108.0	108	175.5	200
										25	27.0	—	—	—	—	—	131.4	150
															36.0	36	131.4	150
															72.0	72	131.4	150
															108.0	108	141.8	150
												1	15	17.0	—	—	148.4	175
															36.0	36	148.4	175
															72.0	72	148.4	175
															108.0	108	163.0	175
													20	22.0	—	—	153.4	175
															36.0	36	153.4	175
															72.0	72	153.4	175
															108.0	108	169.3	175
													25	27.0	—	—	158.4	175
															36.0	36	158.4	175
															72.0	72	158.4	175
															108.0	108	175.5	200
													30	32.0	—	—	164.6	175
															36.0	36	164.6	175
															72.0	72	164.6	175
															108.0	108	181.8	200

See page 169 for legend and notes.

Table 26 — Electrical Data — 50P070 Units with Optional Return Fan (cont)

575-3-60 (V-Ph-Hz) (cont)

VOLTAGE RANGE		COMPRESSOR						CONDENSER FAN MOTOR		EVAPORATOR FAN MOTOR		RETURN FAN			OPTIONAL ELECTRIC HEAT		POWER SUPPLY	
		No. A1			No. B1													
Min	Max	Qty	RLA (ea)	LRA (ea)	Qty	RLA (ea)	LRA (ea)	Qty	FLA	Hp	FLA	Qty	Hp (ea)	FLA (ea)	FLA	kW	MCA	FUSE OR HACR BRKR*
518	632	2	19.9	109	2	23.7	132	4	2.6 (ea)	30	32.0	—	—	—	—	—	137.6	125
															36.0	36	137.6	125
															72.0	72	137.6	125
															108.0	108	148.0	150
												1	15	17.0	—	—	154.6	150
															36.0	36	154.6	150
															72.0	72	154.6	150
															108.0	108	169.3	175
													20	22.0	—	—	159.6	150
															36.0	36	159.6	150
															72.0	72	159.6	150
															108.0	108	175.5	175
													25	27.0	—	—	164.6	175
															36.0	36	164.6	175
															72.0	72	164.6	175
															108.0	108	181.8	175
													30	32.0	—	—	169.6	175
															36.0	36	169.6	175
															72.0	72	169.6	175
															108.0	108	188.0	175
										40	41.0	—	—	—	—	—	148.9	150
															36.0	36	148.9	150
															72.0	72	148.9	150
															108.0	108	159.3	150
												1	15	17.0	—	—	165.9	150
															36.0	36	165.9	150
															72.0	72	165.9	150
															108.0	108	180.5	175
													20	22.0	—	—	170.9	150
															36.0	36	170.9	150
															72.0	72	170.9	150
															108.0	108	186.8	175
													25	27.0	—	—	175.9	175
															36.0	36	175.9	175
															72.0	72	175.9	175
															108.0	108	193.0	175
													30	32.0	—	—	180.9	175
															36.0	36	180.9	175
															72.0	72	180.9	175
															108.0	108	199.3	200

See page 169 for legend and notes.

Table 27 — Electrical Data — 50P 075 Units (without Optional High-Capacity Power Exhaust or Optional Return Fan)

460-3-60 (V-Ph-Hz)

VOLTAGE RANGE		COMPRESSOR						CONDENSER FAN MOTOR		EVAPORATOR FAN MOTOR		POWER EXHAUST			OPTIONAL ELECTRIC HEAT		POWER SUPPLY	
		No. A1			No. B1													
Min	Max	Qty	RLA (ea)	LRA (ea)	Qty	RLA (ea)	LRA (ea)	Qty	FLA	Hp	FLA	Qty	Hp (ea)	FLA (ea)	FLA	kW	MCA	FUSE OR HACR BRKR*
414	508	2	26.9	179	2	26.9	179	4	3.3 (ea)	30	40.0	—	—	—	—	—	170.8	200
															130.0	108	180.0	200
															260.0	216	310.0	350
												2	5	7.6	—	—	186.0	225
															130.0	108	199.0	225
															260.0	216	329.0	350
													7.5	11.0	—	—	192.8	225
															130.0	108	207.5	225
															260.0	216	337.5	350
													10	14.0	—	—	198.8	225
															130.0	108	215.0	225
															260.0	216	345.0	350
										40	52.0	—	—	—	—	—	185.8	225
															130.0	108	195.0	225
															260.0	216	325.0	350
												2	5	7.6	—	—	201.0	250
															130.0	108	214.0	250
															260.0	216	344.0	350
													7.5	11.0	—	—	207.8	250
															130.0	108	222.5	250
															260.0	216	352.5	400
													10	14.0	—	—	213.8	250
															130.0	108	230.0	250
															260.0	216	360.0	400
										50	65.0	—	—	—	—	—	202.1	250
															130.0	108	211.3	250
															260.0	216	341.3	400
												2	5	7.6	—	—	217.3	250
															130.0	108	230.3	250
															260.0	216	360.3	400
													7.5	11.0	—	—	224.1	250
															130.0	108	238.8	250
															260.0	216	368.8	400
													10	14.0	—	—	230.1	250
															130.0	108	246.3	300
															260.0	216	376.3	400
										60	77.0	—	—	—	—	—	217.1	250
															130.0	108	226.3	300
															260.0	216	356.3	400
												2	5	7.6	—	—	232.3	300
															130.0	108	245.3	300
															260.0	216	375.3	400
													7.5	11.0	—	—	239.1	300
															130.0	108	253.8	300
															260.0	216	383.8	450
													10	14.0	—	—	245.1	300
															130.0	108	261.3	300
															260.0	216	391.3	450
										75	96.0	—	—	—	—	—	240.8	300
															130.0	108	250.0	300
															260.0	216	380.0	450
												2	5	7.6	—	—	256.0	350
															130.0	108	269.0	350
															260.0	216	399.0	450
													7.5	11.0	—	—	262.8	350
															130.0	108	277.5	350
															260.0	216	407.5	450
													10	14.0	—	—	268.8	350
															130.0	108	285.0	350
															260.0	216	415.0	500

See page 169 for legend and notes.

Table 27 — Electrical Data — 50P 075 Units (without Optional High-Capacity Power Exhaust or Optional Return Fan) (cont)

575-3-60 (V-Ph-Hz)

VOLTAGE RANGE		COMPRESSOR						CONDENSER FAN MOTOR		EVAPORATOR FAN MOTOR		POWER EXHAUST			OPTIONAL ELECTRIC HEAT		POWER SUPPLY	
		No. A1			No. B1													
Min	Max	Qty	RLA (ea)	LRA (ea)	Qty	RLA (ea)	LRA (ea)	Qty	FLA	Hp	FLA	Qty	Hp (ea)	FLA (ea)	FLA	kW	MCA	FUSE OR HACR BRKR*
518	632	2	23.7	132	2	23.7	132	4	2.6 (ea)	30	32.0	—	—	—	—	—	145.2	175
												2	5	6.1	—	—	157.4	175
													7.5	9.0	—	—	163.2	175
													10	11.0	—	—	167.2	175
										40	41.0	—	—	—	—	—	156.5	175
												2	5	6.1	—	—	168.7	200
													7.5	9.0	—	—	174.5	200
													10	11.0	—	—	178.5	200
										50	52.0	—	—	—	—	—	170.2	200
												2	5	6.1	—	—	182.4	225
													7.5	9.0	—	—	188.2	225
													10	11.0	—	—	192.2	225
										60	62.0	—	—	—	—	—	182.7	225
												2	5	6.1	—	—	194.9	250
													7.5	9.0	—	—	200.7	250
													10	11.0	—	—	204.7	250
										75	77.0	—	—	—	—	—	201.5	250
												2	5	6.1	—	—	213.7	250
													7.5	9.0	—	—	219.5	250
													10	11.0	—	—	223.5	300

See page 169 for legend and notes.

Table 28 — Electrical Data — 50P 075 Units (with Optional High-Capacity Power Exhaust)

460-3-60 (V-Ph-Hz)

VOLTAGE RANGE		COMPRESSOR						CONDENSER FAN MOTOR		EVAPORATOR FAN MOTOR		POWER EXHAUST			OPTIONAL ELECTRIC HEAT		POWER SUPPLY	
		No. A1,A2			No. B1,B2													
Min	Max	Qty	RLA (ea)	LRA (ea)	Qty	RLA (ea)	LRA (ea)	Qty	FLA	Hp	FLA	Qty	Hp (ea)	FLA (ea)	FLA	kW	MCA	FUSE OR HACR BRKR*
414	508	2	26.9	179	2	26.9	179	4	3.3 (ea)	30	40.0	2	10	14.0	—	—	198.8	225
															130.0	108	215.0	225
															260.0	216	345.0	350
													15	21.0	—	—	212.8	250
															130.0	108	232.5	250
															260.0	216	362.5	400
													20	27.0	—	—	224.8	250
															130.0	108	247.5	250
															260.0	216	377.5	400
													25	34.0	—	—	238.8	250
															130.0	108	265.0	300
															260.0	216	395.0	400
													30	40.0	—	—	250.8	300
															130.0	108	280.0	300
															260.0	216	410.0	450
										40	52.0	2	10	14.0	—	—	213.8	250
															130.0	108	230.0	250
															260.0	216	360.0	400
													15	21.0	—	—	227.8	250
															130.0	108	247.5	250
															260.0	216	377.5	400
													20	27.0	—	—	239.8	250
															130.0	108	262.5	300
															260.0	216	392.5	400
													25	34.0	—	—	253.8	300
															130.0	108	280.0	300
															260.0	216	410.0	450
													30	40.0	—	—	265.8	300
															130.0	108	295.0	300
															260.0	216	425.0	450
										50	65.0	2	10	14.0	—	—	230.1	250
															130.0	108	246.3	300
															260.0	216	376.3	400
													15	21.0	—	—	244.1	300
															130.0	108	263.8	300
															260.0	216	393.8	400
													20	27.0	—	—	256.1	300
															130.0	108	278.8	300
															260.0	216	408.8	450
													25	34.0	—	—	270.1	300
															130.0	108	296.3	300
															260.0	216	426.3	450
													30	40.0	—	—	282.1	300
															130.0	108	311.3	350
															260.0	216	441.3	450

See page 169 for legend and notes.

Table 28 — Electrical Data — 50P2 075 Units (with Optional High-Capacity Power Exhaust) (cont)

460-3-60 (V-Ph-Hz) (cont)

VOLTAGE RANGE		COMPRESSOR						CONDENSER FAN MOTOR		EVAPORATOR FAN MOTOR		POWER EXHAUST			OPTIONAL ELECTRIC HEAT		POWER SUPPLY	
		No. A1,A2			No. B1,B2													
Min	Max	Qty	RLA (ea)	LRA (ea)	Qty	RLA (ea)	LRA (ea)	Qty	FLA	Hp	FLA	Qty	Hp (ea)	FLA (ea)	FLA	kW	MCA	FUSE OR HACR BRKR*
414	508	2	26.9	179	2	26.9	179	4	3.3 (ea)	60	77.0	2	10	14.0	—	—	245.1	300
															130.0	108	261.3	300
															260.0	216	391.3	450
													15	21.0	—	—	259.1	300
															130.0	108	278.8	300
															260.0	216	408.8	450
													20	27.0	—	—	271.1	300
															130.0	108	293.8	350
															260.0	216	423.8	450
													25	34.0	—	—	285.1	350
															130.0	108	311.3	350
															260.0	216	441.3	500
													30	40.0	—	—	297.1	350
															130.0	108	326.3	350
															260.0	216	456.3	500
										75	96.0	2	10	14.0	—	—	268.8	350
															130.0	108	285.0	350
															260.0	216	415.0	500
													15	21.0	—	—	282.8	350
															130.0	108	302.5	350
															260.0	216	432.5	500
													20	27.0	—	—	294.8	350
															130.0	108	317.5	400
															260.0	216	447.5	500
													25	34.0	—	—	308.8	400
															130.0	108	335.0	400
															260.0	216	465.0	500
													30	40.0	—	—	320.8	400
															130.0	108	350.0	400
															260.0	216	480.0	500

575-3-60 (V-Ph-Hz)

VOLTAGE RANGE		COMPRESSOR						CONDENSER FAN MOTOR		EVAPORATOR FAN MOTOR		POWER EXHAUST			OPTIONAL ELECTRIC HEAT		POWER SUPPLY	
		No. A1,A2			No. B1,B2													
Min	Max	Qty	RLA (ea)	LRA (ea)	Qty	RLA (ea)	LRA (ea)	Qty	FLA	Hp	FLA	Qty	Hp (ea)	FLA (ea)	FLA	kW	MCA	FUSE OR HACR BRKR*
518	632	2	23.7	132	2	23.7	132	4	2.6 (ea)	30	32.0	2	10	11.0	—	—	167.2	175
													15	17.0	—	—	179.2	200
													20	22.0	—	—	189.2	200
													25	27.0	—	—	199.2	225
													30	32.0	—	—	209.2	225
										40	41.0	2	10	11.0	—	—	178.5	200
													15	17.0	—	—	190.5	225
													20	22.0	—	—	200.5	225
													25	27.0	—	—	210.5	250
													30	32.0	—	—	220.5	250
										50	52.0	2	10	11.0	—	—	192.2	225
													15	17.0	—	—	204.2	250
													20	22.0	—	—	214.2	250
													25	27.0	—	—	224.2	250
													30	32.0	—	—	234.2	250
										60	62.0	2	10	11.0	—	—	204.7	250
													15	17.0	—	—	216.7	250
													20	22.0	—	—	226.7	250
													25	27.0	—	—	236.7	250
													30	32.0	—	—	246.7	300
										75	77.0	2	10	11.0	—	—	223.5	300
													15	17.0	—	—	235.5	300
													20	22.0	—	—	245.5	300
													25	27.0	—	—	255.5	300
													30	32.0	—	—	265.5	300

See page 169 for legend and notes.

Table 29 — Electrical Data — 50P 075 Units (with Optional Return Fan)

460-3-60 (V-Ph-Hz)

VOLTAGE RANGE		COMPRESSOR						CONDENSER FAN MOTOR		EVAPORATOR FAN MOTOR		RETURN FAN			OPTIONAL ELECTRIC HEAT		POWER SUPPLY	
		No. A1,A2			No. B1,B2													
Min	Max	Qty	RLA (ea)	LRA (ea)	Qty	RLA (ea)	LRA (ea)	Qty	FLA	Hp	FLA	Qty	Hp (ea)	FLA (ea)	FLA	kW	MCA	FUSE OR HACR BRKR*
414	508	2	26.9	179	2	26.9	179	4	3.3 (ea)	30	40.0	1	20	27.0	—	—	197.8	225
															130.0	108	213.8	225
															260.0	216	343.8	350
													25	34.0	—	—	204.8	225
															130.0	108	222.5	250
															260.0	216	352.5	400
													30	40.0	—	—	210.8	250
															130.0	108	230.0	250
															260.0	216	360.0	400
													40	52.0	—	—	225.8	250
															130.0	108	245.0	250
															260.0	216	375.0	400
										40	52.0	1	20	27.0	—	—	212.8	250
															130.0	108	228.8	250
															260.0	216	358.8	400
													25	34.0	—	—	219.8	250
															130.0	108	237.5	250
															260.0	216	367.5	400
													30	40.0	—	—	225.8	250
															130.0	108	245.0	250
															260.0	216	375.0	400
													40	52.0	—	—	237.8	250
															130.0	108	260.0	300
															260.0	216	390.0	400
										50	65.0	1	20	27.0	—	—	229.1	250
															130.0	108	245.0	300
															260.0	216	375.0	400
													25	34.0	—	—	236.1	300
															130.0	108	253.8	300
															260.0	216	383.8	400
													30	40.0	—	—	242.1	300
															130.0	108	261.3	300
															260.0	216	391.3	400
													40	52.0	—	—	254.1	300
															130.0	108	276.3	300
															260.0	216	406.3	450
										60	77.0	1	20	27.0	—	—	244.1	300
															130.0	108	260.0	300
															260.0	216	390.0	450
													25	34.0	—	—	251.1	300
															130.0	108	268.8	300
															260.0	216	398.8	450
													30	40.0	—	—	257.1	300
															130.0	108	276.3	300
															260.0	216	406.3	450
													40	52.0	—	—	269.1	300
															130.0	108	291.3	350
															260.0	216	421.3	450
										75	96.0	1	20	27.0	—	—	267.8	350
															130.0	108	283.8	350
															260.0	216	413.8	500
													25	34.0	—	—	274.8	350
															130.0	108	292.5	350
															260.0	216	422.5	500
													30	40.0	—	—	280.8	350
															130.0	108	300.0	350
															260.0	216	430.0	500
													40	52.0	—	—	292.8	350
															130.0	108	315.0	350
															260.0	216	445.0	500

See page 169 for legend and notes.

Table 29 — Electrical Data — 50P 075 Units (with Optional Return Fan) (cont)

575-3-60 (V-Ph-Hz)

VOLTAGE RANGE		COMPRESSOR						CONDENSER FAN MOTOR		EVAPORATOR FAN MOTOR		RETURN FAN			OPTIONAL ELECTRIC HEAT		POWER SUPPLY	
		No. A1,A2			No. B1,B2													
Min	Max	Qty	RLA (ea)	LRA (ea)	Qty	RLA (ea)	LRA (ea)	Qty	FLA	Hp	FLA	Qty	Hp (ea)	FLA (ea)	FLA	kW	MCA	FUSE OR HACR BRKR*
518	632	2	23.7	132	2	23.7	132	4	2.6 (ea)	30	32.0	1	20	22.0	—	—	167.2	175
													25	27.0	—	—	172.2	200
													30	32.0	—	—	177.2	200
													40	41.0	—	—	188.5	225
										40	41.0	1	20	22.0	—	—	178.5	200
													25	27.0	—	—	183.5	200
													30	32.0	—	—	188.5	225
													40	41.0	—	—	197.5	225
										50	52.0	1	20	22.0	—	—	192.2	225
													25	27.0	—	—	197.2	225
													30	32.0	—	—	202.2	250
													40	41.0	—	—	211.2	250
										60	62.0	1	20	22.0	—	—	204.7	250
													25	27.0	—	—	209.7	250
													30	32.0	—	—	214.7	250
													40	41.0	—	—	223.7	250
										75	77.0	1	20	22.0	—	—	223.5	300
													25	27.0	—	—	228.5	300
													30	32.0	—	—	233.5	300
													40	41.0	—	—	242.5	300

See page 169 for legend and notes.

Table 30 — Electrical Data — 50P 090 Units (without Optional High-Capacity Power Exhaust or Optional Return Fan)

460-3-60 (V-Ph-Hz)

VOLTAGE RANGE		COMPRESSOR						CONDENSER FAN MOTOR		EVAPORATOR FAN MOTOR		POWER EXHAUST			OPTIONAL ELECTRIC HEAT		POWER SUPPLY	
		No. A1			No. B1													
Min	Max	Qty	RLA (ea)	LRA (ea)	Qty	RLA (ea)	LRA (ea)	Qty	FLA	Hp	FLA	Qty	Hp (ea)	FLA (ea)	FLA	kW	MCA	FUSE OR HACR BRKR*
414	508	3	23.1	150	3	23.1	150	6	3.3 (ea)	30	40.0	—	—	—	—	—	208.4	225
															130.0	108	208.4	225
															260.0	216	310.0	350
												2	5	7.6	—	—	223.6	250
															130.0	108	223.6	250
															260.0	216	329.0	350
													7.5	11.0	—	—	230.4	250
															130.0	108	230.4	250
															260.0	216	337.5	350
													10	14.0	—	—	236.4	250
															130.0	108	236.4	250
															260.0	216	345.0	350
										40	52.0	—	—	—	—	—	223.4	250
															130.0	108	223.4	250
															260.0	216	325.0	350
												2	5	7.6	—	—	238.6	250
															130.0	108	238.6	250
															260.0	216	344.0	350
													7.5	11.0	—	—	245.4	250
															130.0	108	245.4	250
															260.0	216	352.5	400
													10	14.0	—	—	251.4	300
															130.0	108	251.4	300
															260.0	216	360.0	400
										50	65.0	—	—	—	—	—	239.7	300
															130.0	108	239.7	300
															260.0	216	341.3	400
												2	5	7.6	—	—	254.9	300
															130.0	108	254.9	300
															260.0	216	360.3	400
													7.5	11.0	—	—	261.7	300
															130.0	108	261.7	300
															260.0	216	368.8	400
													10	14.0	—	—	267.7	300
															130.0	108	267.7	300
															260.0	216	376.3	400
										60	77.0	—	—	—	—	—	254.7	300
															130.0	108	254.7	300
															260.0	216	356.3	400
												2	5	7.6	—	—	269.9	300
															130.0	108	269.9	300
															260.0	216	375.3	400
													7.5	11.0	—	—	276.7	350
															130.0	108	276.7	350
															260.0	216	383.8	450
													10	14.0	—	—	282.7	350
															130.0	108	282.7	350
															260.0	216	391.3	450
										75	96.0	—	—	—	—	—	278.4	350
															130.0	108	278.4	350
															260.0	216	380.0	450
												2	5	7.6	—	—	293.6	350
															130.0	108	293.6	350
															260.0	216	399.0	450
													7.5	11.0	—	—	300.4	350
															130.0	108	300.4	350
															260.0	216	407.5	450
													10	14.0	—	—	306.4	400
															130.0	108	306.4	400
															260.0	216	415.0	500

See page 169 for legend and notes.

Table 30 — Electrical Data — 50P 090 Units (without Optional High-Capacity Power Exhaust or Optional Return Fan) (cont)

575-3-60 (V-Ph-Hz)

VOLTAGE RANGE		COMPRESSOR						CONDENSER FAN MOTOR		EVAPORATOR FAN MOTOR		POWER EXHAUST			OPTIONAL ELECTRIC HEAT		POWER SUPPLY	
		No. A1			No. B1													
Min	Max	Qty	RLA (ea)	LRA (ea)	Qty	RLA (ea)	LRA (ea)	Qty	FLA	Hp	FLA	Qty	Hp (ea)	FLA (ea)	FLA	kW	MCA	FUSE OR HACR BRKR*
518	632	3	19.9	109	3	19.9	109	6	2.6 (ea)	30	32.0	—	—	—	—	—	175.0	200
												2	5	6.1	—	—	187.2	200
													7.5	9.0	—	—	193.0	200
													10	11.0	—	—	197.0	225
										40	41.0	—	—	—	—	—	186.3	225
												2	5	6.1	—	—	198.5	225
													7.5	9.0	—	—	204.3	225
													10	11.0	—	—	208.3	225
										50	52.0	—	—	—	—	—	200.0	250
												2	5	6.1	—	—	212.2	250
													7.5	9.0	—	—	218.0	250
													10	11.0	—	—	222.0	250
										60	62.0	—	—	—	—	—	212.5	250
												2	5	6.1	—	—	224.7	250
													7.5	9.0	—	—	230.5	250
													10	11.0	—	—	234.5	250
										75	77.0	—	—	—	—	—	231.3	300
												2	5	6.1	—	—	243.5	300
													7.5	9.0	—	—	249.3	300
													10	11.0	—	—	253.3	300

See page 169 for legend and notes.

Table 31 — Electrical Data — 50P 090 Units (with Optional High-Capacity Power Exhaust)

460-3-60 (V-Ph-Hz)

VOLTAGE RANGE		COMPRESSOR						CONDENSER FAN MOTOR		EVAPORATOR FAN MOTOR		POWER EXHAUST			OPTIONAL ELECTRIC HEAT		POWER SUPPLY	
		No. A1,A2,A3			No. B1,B2,B3													
Min	Max	Qty	RLA (ea)	LRA (ea)	Qty	RLA (ea)	LRA (ea)	Qty	FLA	Hp	FLA	Qty	Hp (ea)	FLA (ea)	FLA	kW	MCA	FUSE OR HACR BRKR*
414	508	3	23.1	150	3	23.1	150	6	3.3 (ea)	30	40.0	2	10	14.0	—	—	236.4	250
															130.0	108	236.4	250
															260.0	216	345.0	350
													15	21.0	—	—	250.4	300
															130.0	108	250.4	300
															260.0	216	362.5	400
													20	27.0	—	—	262.4	300
															130.0	108	262.4	300
															260.0	216	377.5	400
													25	34.0	—	—	276.4	300
															130.0	108	276.4	300
															260.0	216	395.0	400
													30	40.0	—	—	288.4	300
															130.0	108	288.4	300
															260.0	216	410.0	450
										40	52.0	2	10	14.0	—	—	251.4	300
															130.0	108	251.4	300
															260.0	216	360.0	400
													15	21.0	—	—	265.4	300
															130.0	108	265.4	300
															260.0	216	377.5	400
													20	27.0	—	—	277.4	300
															130.0	108	277.4	300
															260.0	216	392.5	400
													25	34.0	—	—	291.4	300
															130.0	108	291.4	300
															260.0	216	410.0	450
													30	40.0	—	—	303.4	350
															130.0	108	303.4	350
															260.0	216	425.0	450
										50	65.0	2	10	14.0	—	—	267.7	300
															130.0	108	267.7	300
															260.0	216	376.3	400
													15	21.0	—	—	281.7	300
															130.0	108	281.7	300
															260.0	216	393.8	400
													20	27.0	—	—	293.7	350
															130.0	108	293.7	350
															260.0	216	408.8	450
													25	34.0	—	—	307.7	350
															130.0	108	307.7	350
															260.0	216	426.3	450
													30	40.0	—	—	319.7	350
															130.0	108	319.7	350
															260.0	216	441.3	450

See page 169 for legend and notes.

Table 31 — Electrical Data — 50P 090 Units (with Optional High-Capacity Power Exhaust) (cont)

460-3-60 (V-Ph-Hz) (cont)

VOLTAGE RANGE		COMPRESSOR						CONDENSER FAN MOTOR		EVAPORATOR FAN MOTOR		POWER EXHAUST			OPTIONAL ELECTRIC HEAT		POWER SUPPLY	
		No. A1,A2,A3			No. B1,B2,B3													
Min	Max	Qty	RLA (ea)	LRA (ea)	Qty	RLA (ea)	LRA (ea)	Qty	FLA	Hp	FLA	Qty	Hp (ea)	FLA (ea)	FLA	kW	MCA	FUSE OR HACR BRKR*
414	508	3	23.1	150	3	23.1	150	6	3.3 (ea)	60	77.0	2	10	14.0	—	—	282.7	350
															130.0	108	282.7	350
															260.0	216	391.3	450
													15	21.0	—	—	296.7	350
															130.0	108	296.7	350
															260.0	216	408.8	450
													20	27.0	—	—	308.7	350
															130.0	108	308.7	350
															260.0	216	423.8	450
													25	34.0	—	—	322.7	350
															130.0	108	322.7	350
															260.0	216	441.3	500
													30	40.0	—	—	334.7	400
															130.0	108	334.7	400
															260.0	216	456.3	500
										75	96.0	2	10	14.0	—	—	306.4	400
															130.0	108	306.4	400
															260.0	216	415.0	500
													15	21.0	—	—	320.4	400
															130.0	108	320.4	400
															260.0	216	432.5	500
													20	27.0	—	—	332.4	400
															130.0	108	332.4	400
															260.0	216	447.5	500
													25	34.0	—	—	346.4	400
															130.0	108	346.4	400
															260.0	216	465.0	500
													30	40.0	—	—	358.4	450
															130.0	108	358.4	450
															260.0	216	480.0	500

575-3-60 (V-Ph-Hz)

VOLTAGE RANGE		COMPRESSOR						CONDENSER FAN MOTOR		EVAPORATOR FAN MOTOR		POWER EXHAUST			OPTIONAL ELECTRIC HEAT		POWER SUPPLY	
		No. A1,A2,A3			No. B1,B2,B3													
Min	Max	Qty	RLA (ea)	LRA (ea)	Qty	RLA (ea)	LRA (ea)	Qty	FLA	Hp	FLA	Qty	Hp (ea)	FLA (ea)	FLA	kW	MCA	FUSE OR HACR BRKR*
518	632	3	19.9	109	3	19.9	109	6	2.6 (ea)	30	32.0	2	10	11.0	—	—	197.0	225
													15	17.0	—	—	209.0	225
													20	22.0	—	—	219.0	250
													25	27.0	—	—	229.0	250
													30	32.0	—	—	239.0	250
										40	41.0	2	10	11.0	—	—	208.3	225
													15	17.0	—	—	220.3	250
													20	22.0	—	—	230.3	250
													25	27.0	—	—	240.3	250
													30	32.0	—	—	250.3	300
										50	52.0	2	10	11.0	—	—	222.0	250
													15	17.0	—	—	234.0	250
													20	22.0	—	—	244.0	250
													25	27.0	—	—	254.0	300
													30	32.0	—	—	264.0	300
										60	62.0	2	10	11.0	—	—	234.5	250
													15	17.0	—	—	246.5	300
													20	22.0	—	—	256.5	300
													25	27.0	—	—	266.5	300
													30	32.0	—	—	276.5	300
										75	77.0	2	10	11.0	—	—	253.3	300
													15	17.0	—	—	265.3	300
													20	22.0	—	—	275.3	350
													25	27.0	—	—	285.3	350
													30	32.0	—	—	295.3	350

See page 169 for legend and notes.

Table 32 — Electrical Data — 50P 090 Units (with Optional Return Fan)

460-3-60 (V-Ph-Hz)

VOLTAGE RANGE		COMPRESSOR						CONDENSER FAN MOTOR		EVAPORATOR FAN MOTOR		RETURN FAN			OPTIONAL ELECTRIC HEAT		POWER SUPPLY	
		No. A1,A2,A3			No. B1,B2,B3													
Min	Max	Qty	RLA (ea)	LRA (ea)	Qty	RLA (ea)	LRA (ea)	Qty	FLA	Hp	FLA	Qty	Hp (ea)	FLA (ea)	FLA	kW	MCA	FUSE OR HACR BRKR*
414	508	3	23.1	150	3	23.1	150	6	3.3 (ea)	30	40.0	1	20	27.0	—	—	235.4	250
															130.0	108	235.4	250
															260.0	216	343.8	350
													25	34.0	—	—	242.4	250
															130.0	108	242.4	250
															260.0	216	352.5	400
													30	40.0	—	—	248.4	250
															130.0	108	248.4	250
															260.0	216	360.0	400
													40	52.0	—	—	263.4	300
															130.0	108	263.4	300
															260.0	216	375.0	400
										40	52.0	1	20	27.0	—	—	250.4	300
															130.0	108	250.4	300
															260.0	216	358.8	400
													25	34.0	—	—	257.4	300
															130.0	108	257.4	300
															260.0	216	367.5	400
													30	40.0	—	—	263.4	300
															130.0	108	263.4	300
															260.0	216	375.0	400
													40	52.0	—	—	275.4	300
															130.0	108	275.4	300
															260.0	216	390.0	400
										50	65.0	1	20	27.0	—	—	266.7	300
															130.0	108	266.7	300
															260.0	216	375.0	400
													25	34.0	—	—	273.7	300
															130.0	108	273.7	300
															260.0	216	383.8	400
													30	40.0	—	—	279.7	300
															130.0	108	279.7	300
															260.0	216	391.3	400
													40	52.0	—	—	291.7	350
															130.0	108	291.7	350
															260.0	216	406.3	450
										60	77.0	1	20	27.0	—	—	281.7	350
															130.0	108	281.7	350
															260.0	216	390.0	450
													25	34.0	—	—	288.7	350
															130.0	108	288.7	350
															260.0	216	398.8	450
													30	40.0	—	—	294.7	350
															130.0	108	294.7	350
															260.0	216	406.3	450
													40	52.0	—	—	306.7	350
															130.0	108	306.7	350
															260.0	216	421.3	450
										75	96.0	1	20	27.0	—	—	305.4	400
															130.0	108	305.4	400
															260.0	216	413.8	500
													25	34.0	—	—	312.4	400
															130.0	108	312.4	400
															260.0	216	422.5	500
													30	40.0	—	—	318.4	400
															130.0	108	318.4	400
															260.0	216	430.0	500
													40	52.0	—	—	330.4	400
															130.0	108	330.4	400
															260.0	216	445.0	500

See page 169 for legend and notes.

Table 32 — Electrical Data — 50P 090 Units (with Optional Return Fan) (cont)

575-3-60 (V-Ph-Hz)

VOLTAGE RANGE		COMPRESSOR						CONDENSER FAN MOTOR		EVAPORATOR FAN MOTOR		RETURN FAN			OPTIONAL ELECTRIC HEAT		POWER SUPPLY	
		No. A1,A2,A3			No. B1,B2,B3													
Min	Max	Qty	RLA (ea)	LRA (ea)	Qty	RLA (ea)	LRA (ea)	Qty	FLA	Hp	FLA	Qty	Hp (ea)	FLA (ea)	FLA	kW	MCA	FUSE OR HACR BRKR*
518	632	3	19.9	109	3	19.9	109	6	2.6 (ea)	30	32.0	1	20	22.0	—	—	197.0	225
													25	27.0	—	—	202.0	225
													30	32.0	—	—	207.0	225
													40	41.0	—	—	218.3	250
										40	41.0	1	20	22.0	—	—	208.3	225
													25	27.0	—	—	213.3	250
													30	32.0	—	—	218.3	250
													40	41.0	—	—	227.3	250
										50	52.0	1	20	22.0	—	—	222.0	250
													25	27.0	—	—	227.0	250
													30	32.0	—	—	232.0	250
													40	41.0	—	—	241.0	250
										60	62.0	1	20	22.0	—	—	234.5	250
													25	27.0	—	—	239.5	300
													30	32.0	—	—	244.5	300
													40	41.0	—	—	253.5	300
										75	77.0	1	20	22.0	—	—	253.3	300
													25	27.0	—	—	258.3	300
													30	32.0	—	—	263.3	300
													40	41.0	—	—	272.3	300

See page 169 for legend and notes.

Table 33 — Electrical Data — 50P 100 Units (without Optional High-Capacity Power Exhaust or Optional Return Fan)

460-3-60 (V-Ph-Hz)

VOLTAGE RANGE		COMPRESSOR						CONDENSER FAN MOTOR		EVAPORATOR FAN MOTOR		POWER EXHAUST			OPTIONAL ELECTRIC HEAT		POWER SUPPLY	
		No. A1,A2,A3			No. B1,B2,B3													
Min	Max	Qty	RLA (ea)	LRA (ea)	Qty	RLA (ea)	LRA (ea)	Qty	FLA	Hp	FLA	Qty	Hp (ea)	FLA (ea)	FLA	kW	MCA	FUSE OR HACR BRKR*
414	508	3	23.1	1150	3	26.9	179	6	3.3 (ea)	30	40.0	—	—	—	—	—	219.8	250
															130.0	108	219.8	250
															260.0	216	310.0	350
												2	5	7.6	—	—	235.0	250
															130.0	108	235.0	250
															260.0	216	329.0	350
													7.5	11.0	—	—	241.8	250
															130.0	108	241.8	250
															260.0	216	337.5	350
													10	14.0	—	—	247.8	250
															130.0	108	247.8	250
															260.0	216	345.0	350
										40	52.0	—	—	—	—	—	234.8	250
															130.0	108	234.8	250
															260.0	216	325.0	350
												2	5	7.6	—	—	250.0	300
															130.0	108	250.0	300
															260.0	216	344.0	350
													7.5	11.0	—	—	256.8	300
															130.0	108	256.8	300
															260.0	216	352.5	400
													10	14.0	—	—	262.8	300
															130.0	108	262.8	300
															260.0	216	360.0	400
										50	65.0	—	—	—	—	—	251.1	300
															130.0	108	251.1	300
															260.0	216	341.3	400
												2	5	7.6	—	—	266.3	300
															130.0	108	266.3	300
															260.0	216	360.3	400
													7.5	11.0	—	—	273.1	300
															130.0	108	273.1	300
															260.0	216	368.8	400
													10	14.0	—	—	279.1	300
															130.0	108	279.1	300
															260.0	216	376.3	400
										60	77.0	—	—	—	—	—	266.1	300
															130.0	108	266.1	300
															260.0	216	356.3	400
												2	5	7.6	—	—	281.3	350
															130.0	108	281.3	350
															260.0	216	375.3	400
													7.5	11.0	—	—	288.1	350
															130.0	108	288.1	350
															260.0	216	383.8	450
													10	14.0	—	—	294.1	350
															130.0	108	294.1	350
															260.0	216	391.3	450
										75	96.0	—	—	—	—	—	289.8	350
															130.0	108	289.8	350
															260.0	216	380.0	450
												2	5	7.6	—	—	305.0	400
															130.0	108	305.0	400
															260.0	216	399.0	450
													7.5	11.0	—	—	311.8	400
															130.0	108	311.8	400
															260.0	216	407.5	450
													10	14.0	—	—	317.8	400
															130.0	108	317.8	400
															260.0	216	415.0	500

See page 169 for legend and notes.

Table 33 — Electrical Data — 50P 100 Units (without Optional High-Capacity Power Exhaust or Optional Return Fan) (cont)

575-3-60 (V-Ph-Hz)

VOLTAGE RANGE		COMPRESSOR						CONDENSER FAN MOTOR		EVAPORATOR FAN MOTOR		POWER EXHAUST			OPTIONAL ELECTRIC HEAT		POWER SUPPLY	
		No. A1,A2,A3			No. B1,B2,B3													
Min	Max	Qty	RLA (ea)	LRA (ea)	Qty	RLA (ea)	LRA (ea)	Qty	FLA	Hp	FLA	Qty	Hp (ea)	FLA (ea)	FLA	kW	MCA	FUSE OR HACR BRKR*
518	632	3	19.9	109	3	23.7	132	6	2.6 (ea)	30	32.0	—	—	—	—	—	186.4	200
												2	5	6.1	—	—	198.6	225
													7.5	9.0	—	—	204.4	225
													10	11.0	—	—	208.4	225
										40	41.0	—	—	—	—	—	197.7	225
												2	5	6.1	—	—	209.9	250
													7.5	9.0	—	—	215.7	250
													10	11.0	—	—	219.7	250
										50	52.0	—	—	—	—	—	211.4	250
												2	5	6.1	—	—	223.6	250
													7.5	9.0	—	—	229.4	250
													10	11.0	—	—	233.4	250
										60	62.0	—	—	—	—	—	223.9	250
												2	5	6.1	—	—	236.1	250
													7.5	9.0	—	—	241.9	300
													10	11.0	—	—	245.9	300
										75	77.0	—	—	—	—	—	242.7	300
												2	5	6.1	—	—	254.9	300
													7.5	9.0	—	—	260.7	300
													10	11.0	—	—	264.7	300

See page 169 for legend and notes.

Table 34 — Electrical Data — 50P 100 Units (with Optional High-Capacity Power Exhaust)

460-3-60 (V-Ph-Hz)

VOLTAGE RANGE		COMPRESSOR						CONDENSER FAN MOTOR		EVAPORATOR FAN MOTOR		POWER EXHAUST			OPTIONAL ELECTRIC HEAT		POWER SUPPLY	
		No. A1,A2,A3			No. B1,B2,B3													
Min	Max	Qty	RLA (ea)	LRA (ea)	Qty	RLA (ea)	LRA (ea)	Qty	FLA	Hp	FLA	Qty	Hp (ea)	FLA (ea)	FLA	kW	MCA	FUSE OR HACR BRKR*
414	508	3	23.1	1150	3	26.9	179	6	3.3 (ea)	30	40.0	—	—	—	—	—	219.8	250
															130.0	108	219.8	250
															260.0	216	310.0	350
												2	5	7.6	—	—	235.0	250
															130.0	108	235.0	250
															260.0	216	329.0	350
													7.5	11.0	—	—	241.8	250
															130.0	108	241.8	250
															260.0	216	337.5	350
													10	14.0	—	—	247.8	250
															130.0	108	247.8	250
															260.0	216	345.0	350
										40	52.0	—	—	—	—	—	234.8	250
															130.0	108	234.8	250
															260.0	216	325.0	350
												2	5	7.6	—	—	250.0	300
															130.0	108	250.0	300
															260.0	216	344.0	350
													7.5	11.0	—	—	256.8	300
															130.0	108	256.8	300
															260.0	216	352.5	400
													10	14.0	—	—	262.8	300
															130.0	108	262.8	300
															260.0	216	360.0	400
										50	65.0	—	—	—	—	—	251.1	300
															130.0	108	251.1	300
															260.0	216	341.3	400
												2	5	7.6	—	—	266.3	300
															130.0	108	266.3	300
															260.0	216	360.3	400
													7.5	11.0	—	—	273.1	300
															130.0	108	273.1	300
															260.0	216	368.8	400
													10	14.0	—	—	279.1	300
															130.0	108	279.1	300
															260.0	216	376.3	400
										60	77.0	—	—	—	—	—	266.1	300
															130.0	108	266.1	300
															260.0	216	356.3	400
												2	5	7.6	—	—	281.3	350
															130.0	108	281.3	350
															260.0	216	375.3	400
													7.5	11.0	—	—	288.1	350
															130.0	108	288.1	350
															260.0	216	383.8	450
													10	14.0	—	—	294.1	350
															130.0	108	294.1	350
															260.0	216	391.3	450
										75	96.0	—	—	—	—	—	289.8	350
															130.0	108	289.8	350
															260.0	216	380.0	450
												2	5	7.6	—	—	305.0	400
															130.0	108	305.0	400
															260.0	216	399.0	450
													7.5	11.0	—	—	311.8	400
															130.0	108	311.8	400
															260.0	216	407.5	450
													10	14.0	—	—	317.8	400
															130.0	108	317.8	400
															260.0	216	415.0	500

See page 169 for legend and notes.

Table 34 — Electrical Data — 50P 100 Units (with Optional High-Capacity Power Exhaust) (cont)

575-3-60 (V-Ph-Hz)

VOLTAGE RANGE		COMPRESSOR						CONDENSER FAN MOTOR		EVAPORATOR FAN MOTOR		POWER EXHAUST			OPTIONAL ELECTRIC HEAT		POWER SUPPLY	
		No. A1,A2,A3			No. B1,B2,B3													
Min	Max	Qty	RLA (ea)	LRA (ea)	Qty	RLA (ea)	LRA (ea)	Qty	FLA	Hp	FLA	Qty	Hp (ea)	FLA (ea)	FLA	kW	MCA	FUSE OR HACR BRKR*
518	632	3	19.9	109	3	23.7	132	6	2.6 (ea)	30	32.0	—	—	—	—	—	186.4	200
												2	5	6.1	—	—	198.6	225
													7.5	9.0	—	—	204.4	225
													10	11.0	—	—	208.4	225
										40	41.0	—	—	—	—	—	197.7	225
												2	5	6.1	—	—	209.9	250
													7.5	9.0	—	—	215.7	250
													10	11.0	—	—	219.7	250
										50	52.0	—	—	—	—	—	211.4	250
												2	5	6.1	—	—	223.6	250
													7.5	9.0	—	—	229.4	250
													10	11.0	—	—	233.4	250
										60	62.0	—	—	—	—	—	223.9	250
												2	5	6.1	—	—	236.1	250
													7.5	9.0	—	—	241.9	300
													10	11.0	—	—	245.9	300
										75	77.0	—	—	—	—	—	242.7	300
												2	5	6.1	—	—	254.9	300
													7.5	9.0	—	—	260.7	300
													10	11.0	—	—	264.7	300

See page 169 for legend and notes.

Table 35 — Electrical Data — 50P 100 Units (with Optional Return Fan)

460-3-60 (V-Ph-Hz)

VOLTAGE RANGE		COMPRESSOR						CONDENSER FAN MOTOR		EVAPORATOR FAN MOTOR		RETURN FAN			OPTIONAL ELECTRIC HEAT		POWER SUPPLY	
		No. A1,A2,A3			No. B1,B2,B3													
Min	Max	Qty	RLA (ea)	LRA (ea)	Qty	RLA (ea)	LRA (ea)	Qty	FLA	Hp	FLA	Qty	Hp (ea)	FLA (ea)	FLA	kW	MCA	FUSE OR HACR BRKR*
414	508	3	23.1	150	3	26.9	179	6	3.3 (ea)	30	40.0	1	20	27.0	—	—	246.8	250
															130.0	108	246.8	250
															260.0	216	343.8	350
													25	34.0	—	—	253.8	300
															130.0	108	253.8	300
															260.0	216	352.5	400
													30	40.0	—	—	259.8	300
															130.0	108	259.8	300
															260.0	216	360.0	400
													40	52.0	—	—	274.8	300
															130.0	108	274.8	300
															260.0	216	375.0	400
										40	52.0	1	20	27.0	—	—	261.8	300
															130.0	108	261.8	300
															260.0	216	358.8	400
													25	34.0	—	—	268.8	300
															130.0	108	268.8	300
															260.0	216	367.5	400
													30	40.0	—	—	274.8	300
															130.0	108	274.8	300
															260.0	216	375.0	400
													40	52.0	—	—	286.8	300
															130.0	108	286.8	300
															260.0	216	390.0	400
										50	65.0	1	20	27.0	—	—	278.1	300
															130.0	108	278.1	300
															260.0	216	375.0	400
													25	34.0	—	—	285.1	350
															130.0	108	285.1	350
															260.0	216	383.8	400
													30	40.0	—	—	291.1	350
															130.0	108	291.1	350
															260.0	216	391.3	400
													40	52.0	—	—	303.1	350
															130.0	108	303.1	350
															260.0	216	406.3	450
										60	77.0	1	20	27.0	—	—	293.1	350
															130.0	108	293.1	350
															260.0	216	390.0	450
													25	34.0	—	—	300.1	350
															130.0	108	300.1	350
															260.0	216	398.8	450
													30	40.0	—	—	306.1	350
															130.0	108	306.1	350
															260.0	216	406.3	450
													40	52.0	—	—	318.1	350
															130.0	108	318.1	350
															260.0	216	421.3	450
										75	96.0	1	20	27.0	—	—	316.8	400
															130.0	108	316.8	400
															260.0	216	413.8	500
													25	34.0	—	—	323.8	400
															130.0	108	323.8	400
															260.0	216	422.5	500
													30	40.0	—	—	329.8	400
															130.0	108	329.8	400
															260.0	216	430.0	500
													40	52.0	—	—	341.8	400
															130.0	108	341.8	400
															260.0	216	445.0	500

See page 169 for legend and notes.

Table 35 — Electrical Data — 50P 100 Units (with Optional Return Fan) (cont)

575-3-60 (V-Ph-Hz)

VOLTAGE RANGE		COMPRESSOR						CONDENSER FAN MOTOR		EVAPORATOR FAN MOTOR		RETURN FAN			OPTIONAL ELECTRIC HEAT		POWER SUPPLY	
		No. A1,A2,A3			No. B1,B2,B3													
Min	Max	Qty	RLA (ea)	LRA (ea)	Qty	RLA (ea)	LRA (ea)	Qty	FLA	Hp	FLA	Qty	Hp (ea)	FLA (ea)	FLA	kW	MCA	FUSE OR HACR BRKR*
518	632	3	19.9	109	3	23.7	132	6	2.6 (ea)	30	32.0	1	20	22.0	—	—	208.4	225
													25	27.0	—	—	213.4	225
													30	32.0	—	—	218.4	250
													40	41.0	—	—	229.7	250
										40	41.0	1	20	22.0	—	—	219.7	250
													25	27.0	—	—	224.7	250
													30	32.0	—	—	229.7	250
													40	41.0	—	—	238.7	250
										50	52.0	1	20	22.0	—	—	233.4	250
													25	27.0	—	—	238.4	250
													30	32.0	—	—	243.4	250
													40	41.0	—	—	252.4	300
										60	62.0	1	20	22.0	—	—	245.9	300
													25	27.0	—	—	250.9	300
													30	32.0	—	—	255.9	300
													40	41.0	—	—	264.9	300
										75	77.0	1	20	22.0	—	—	264.7	300
													25	27.0	—	—	269.7	300
													30	32.0	—	—	274.7	350
													40	41.0	—	—	283.7	350

LEGEND

FLA — Full Load Amps
HACR — Heating, Air Conditioning and Refrigeration
Hp — Nominal Horsepower
LRA — Locked Rotor Amps
MCA — Minimum Circuit Amps (for wire sizing)
RLA — Rated Load Amps

C ETL LISTED US
Intertek

* Used to determine minimum disconnect per NEC (National Electrical Code).

NOTE: Electric resistance heaters are rated at 230-v (for 208/230-v use), 380-v, 460-v, and 575-v. To determine heater capacity (kW) at other unit operating voltage, multiply heater nominal capacity by appropriate multiplier at right.

MULTIPLICATION FACTORS

HEATER kW RATING (VOLTS)	VOLTAGE DISTRIBUTION V-3-60	MULTIPLICATION FACTOR
230	200	0.756
	208	0.818
	230	1.000
	240	1.089
380	360	0.897
	380	1.000
	400	1.108
460	440	0.914
	460	1.000
	480	1.089
575	550	0.915
	575	1.000
	600	1.089

Electric heaters are tested and ETL approved at maximum total external static pressure of 1.9 in. wg.

Step 13 — Connect Air Pressure Tubing

Before options such as the variable frequency drive (VFD) and/or modulating power exhaust can operate properly, the pneumatic tubing for pressure sensing must be installed. Use fire-retardant plenum tubing (field-supplied). All control devices use 1/4-in. tubing. Tubing must be run from the appropriate sensing location (in the duct or in the building space) to the control device location in the unit.

VARIABLE FREQUENCY DRIVE

The tubing for the duct pressure (DP) control option should sample supply duct pressure approximately 2/3 of the way out from the unit in the main trunk duct, at a location where a constant duct pressure is desired.

The duct pressure is sensed by a pressure transducer. The pressure transducer output is directed to the unit control module. On all sizes, the DP transducer is located in the unit auxiliary control box. See Fig. 44 and 45 for auxiliary control box location. See Fig. 46 and 47 for auxiliary control box details. Use a nominal 1/4-in. plastic tubing.

Refer to appropriate base unit Controls and Troubleshooting book for instructions on adjusting set points for duct pressure controls.

MODULATING POWER EXHAUST

The tubing for the building pressure (BP) control (achieved via the modulating power exhaust option) should sample building pressure in the area near the entrance lobby (or other appropriate and sensitive location) so that location is controlled as closely to design pressures as possible.

These units use a pressure transducer for sensing building pressure. The BP transducer is located in the unit auxiliary control box. See Fig. 44 and 45 for auxiliary control box location. See Fig. 46 and 47 for auxiliary control box details. Use a nominal 1/4-in. plastic tubing.

For instructions on adjusting BP control set points, refer to the Controls and Troubleshooting book.

HIGH-CAPACITY POWER EXHAUST

The tubing for the building pressure (BP) control (achieved via the high-capacity power exhaust package) should sample building pressure in the area near the entrance lobby (or other appropriate and sensitive location) so that location is controlled as closely to the design pressures as possible.

These units use a pressure transducer for sensing building pressure (BP). The pressure transducer output is directed to the unit control module. The BP transducer is located in the unit auxiliary control box. See Fig. 45 for auxiliary control box location. See Fig. 47 for auxiliary control box details. Use a nominal 1/4-in. plastic tubing.

For instructions on adjusting BP control set points, refer to Controls and Troubleshooting book.

RETURN/EXHAUST POWER EXHAUST

The tubing for the building pressure control (achieved via the return/exhaust power exhaust option) should sample building pressure in the area near the entrance lobby (or other appropriate and sensitive location) so that location is controlled as closely to design pressures as possible.

The units use a pressure transducer for sensing building pressure. The BP transducer is located in the unit auxiliary control box. See Fig. 45 for auxiliary control box location. See Fig. 48 for auxiliary control box details. Use a nominal 1/4-in. plastic tubing.

For instructions on adjusting BP control set points refer to the Controls and Troubleshooting book.

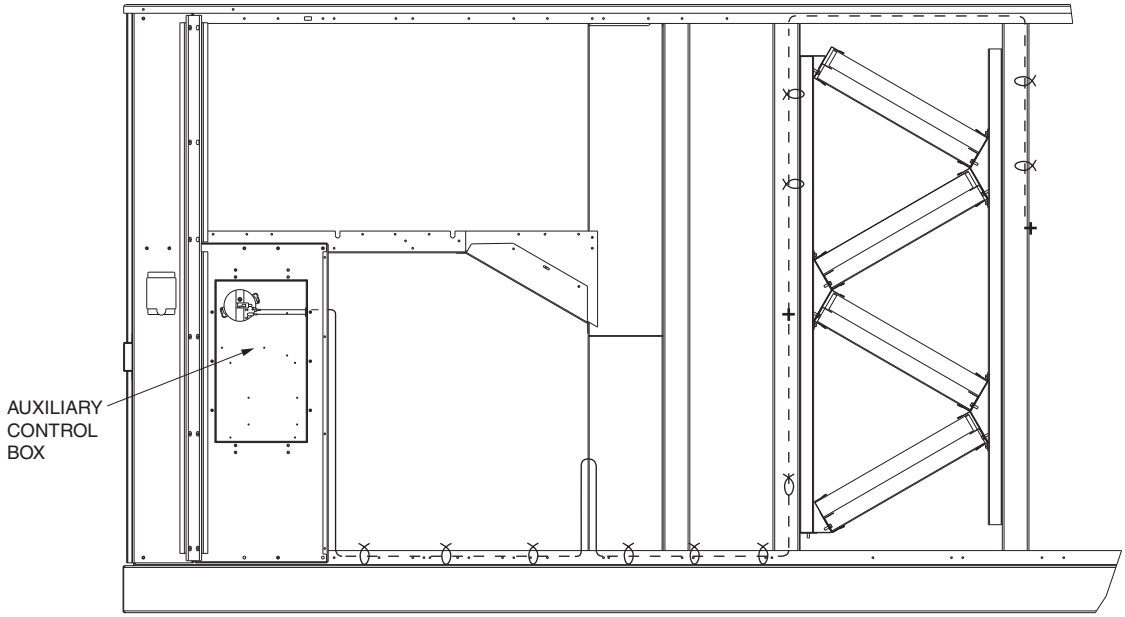

Fig. 44 — Auxiliary Control Box Location (Sizes 030-050)

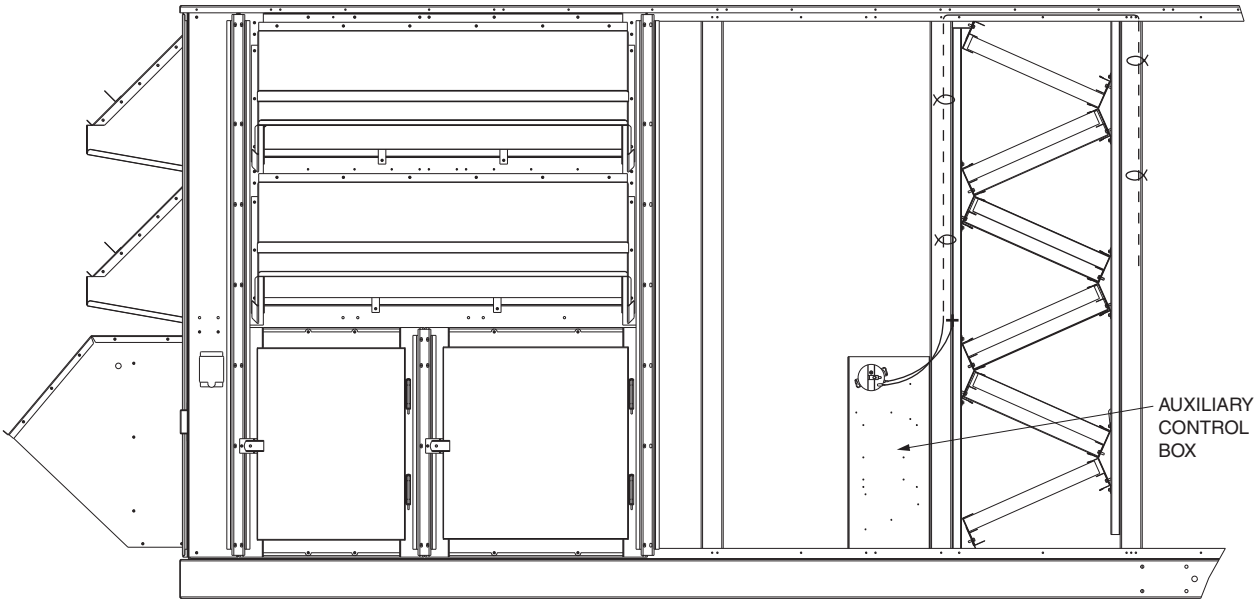

Fig. 45 — Auxiliary Control Box Location (Sizes 055-100)

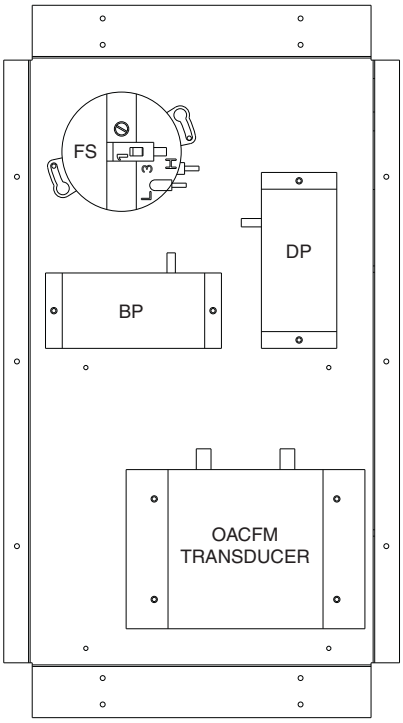

LEGEND

BP — Building Pressure Transducer
DP — Duct Pressure Transducer
FS — Filter Switch
OACFM — Outdoor Air Cfm Sensor Transducer

Fig. 46 — Auxiliary Control Box Details (Sizes 030-050)

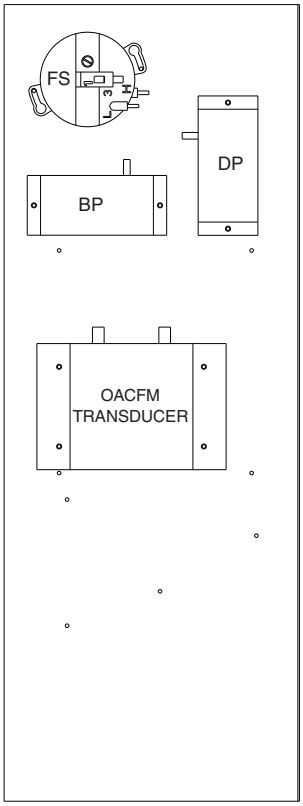

LEGEND

BP — Building Pressure Transducer
DP — Duct Pressure Transducer
FS — Filter Switch
OACFM — Outdoor Air Cfm Sensor Transducer

Fig. 47 — Auxiliary Control Box Details (Sizes 055-100 without Return Fan)

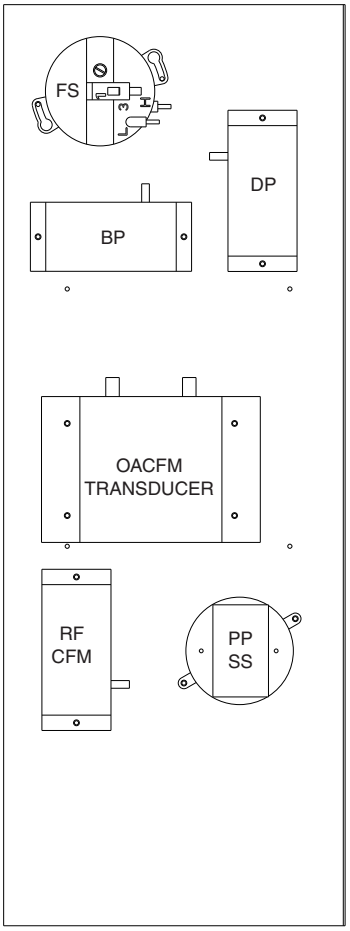

LEGEND

BP — Building Pressure Transducer
DP — Duct Pressure Transducer
FS — Filter Switch
OACFM — Outdoor Air Cfm Sensor Transducer
PPSS — Plenum Pressure Safety Switch
RFCFM — Return Fan Cfm Sensor Transducer

Fig. 48 — Auxiliary Control Box Details (Units with Optional Return Fan)

Step 14 — Supply-Fan Shipping Brackets

Supply-fan shipping brackets (4 per unit) must be removed from each corner of the fan sled before starting unit.

UNIT SIZES 030-050

1. To remove brackets, raise fan sled by turning adjusting bolt counterclockwise until spring is compressed slightly.
2. Remove screws holding shipping bracket to unit cross rail.
3. Remove shipping bracket (top of bracket is slotted so that it will slide out).
4. After removing all shipping brackets, level fan sled using the adjusting screws. On all 4 corners, dimension from cross rail to fan sled should be as shown in Fig. 49.

UNIT SIZES 055-070

To remove shipping brackets, remove the 6 screws holding each bracket to the cross rail. There are 8 brackets per unit. See Fig. 50.

After removing all shipping brackets, level fan sled using the adjusting screws. On all 4 corners dimension from cross rail to fan sled should be as shown in Fig. 50.

UNIT SIZES 075-100

To remove shipping brackets, remove 6 screws holding each bracket to the cross rail. There are 4 brackets per unit. See Fig. 51.

After removing all shipping brackets, level fan sled using the adjusting screws. On all 4 corners dimension from cross rail to fan sled should be as shown in Fig. 51.

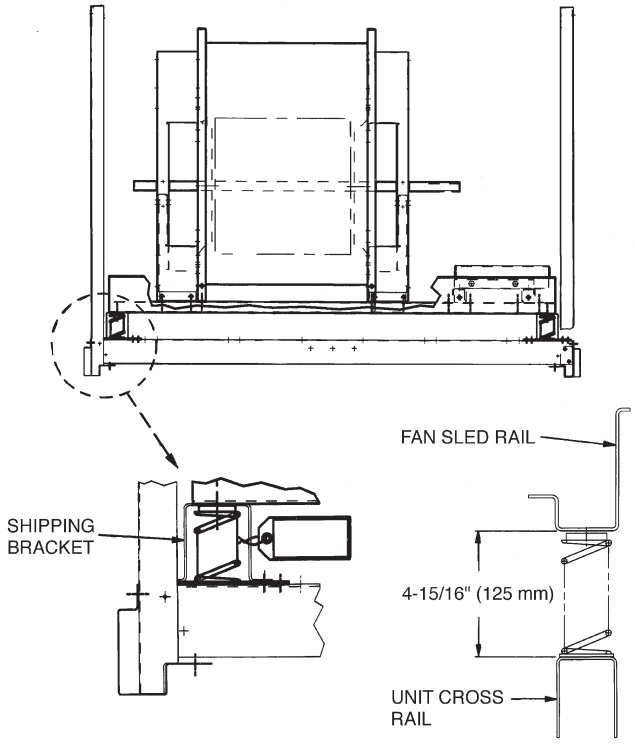

Fig. 49 — Shipping Brackets; Size 030-050 Units

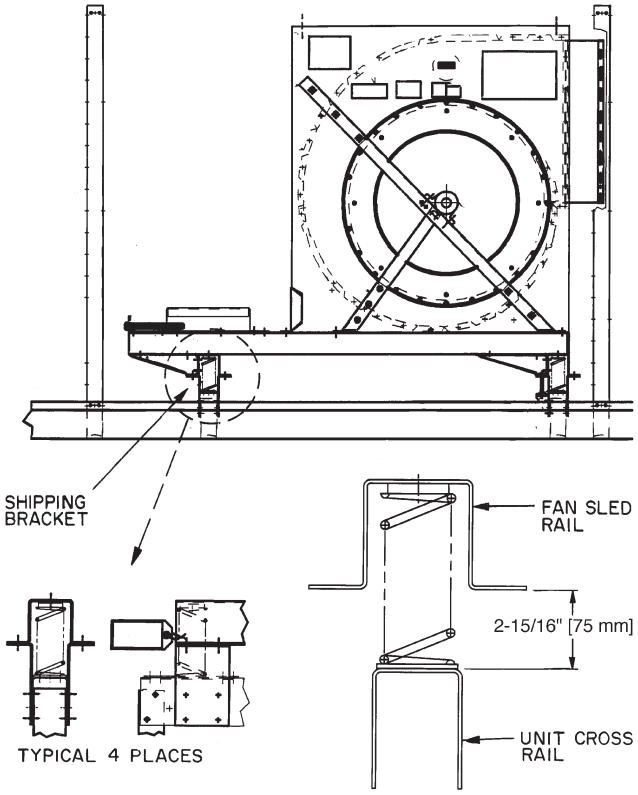

Fig. 50 — Shipping Brackets; Size 055-070 Units

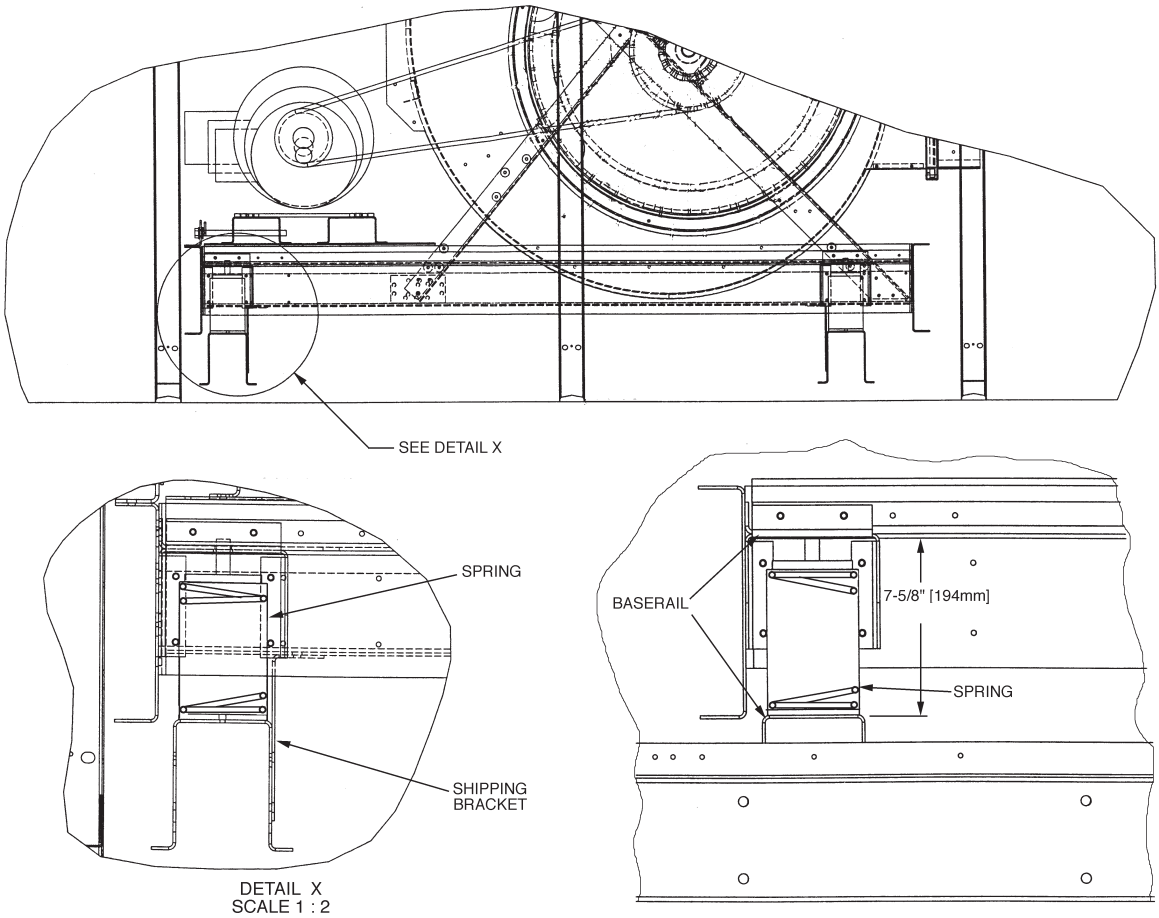

Fig. 51 — Shipping Brackets (Sizes 075-100)

Step 15 — Remove Optional Return/Exhaust-Fan Shipping Brackets

The optional factory-installed return/exhaust fan has shipping brackets that must be removed from each corner of the fan sled before starting unit.

To remove shipping brackets, remove 2 screws holding each bracket to the cross rail. There are 4 brackets per unit.

After removing all shipping brackets, level the fan using the adjusting screws. On all 4 corners dimension from cross rail to fan sled should be as shown in Fig. 52.

Step 16 — Install Supply-Air Thermistors (Optional SCR Electric Heat Units Only)

Supply-air thermistors are a field-installed, factory-provided component. Three supply-air thermistors are shipped with optional SCR (Silicon Controlled Rectifier) electric heat units inside the unit control box. Thermistor wires must be connected to the SCB (staged heat control board) in the unit control box. See Table 36.

The supply-air thermistors should be located in the supply duct with the following criteria:

- downstream of the electric heater element
- equally spaced as far as possible from the electric heater element
- a duct location where none of the supply air thermistors are within sight of the electric heater element
- a duct location with good mixed supply air portion of the unit.

Step 17 — Greenspeed/Low Ambient Control (Optional)

The Greenspeed®/low ambient control is using a motor speed control device (VFD) which adjusts condenser fan motor speed in response to varying discharging refrigerant pressure. A properly applied Greenspeed/low ambient control extends the operating range of air-conditioning systems and permits operation at lower outdoor ambient temperatures.

Table 36 — Supply-Air Thermistor Designations

THERMISTOR	PIN CONNECTION POINT	FUNCTION AND LOCATION	PART NO.
		Thermistors	
SAT1	J8 – 1,2 (SCB)	Supply-Air Thermistor (SAT) — Inserted into supply duct underneath the electric heater elements (factory-provided, field-installed)	HH79NZ033
SAT2	J8 – 3,4 (SCB)	Supply-Air Thermistor (SAT) — Inserted into supply duct underneath the electric heater elements (factory-provided, field-installed)	
SAT3	J8 – 5,6 (SCB)	Supply-Air Thermistor (SAT) — Inserted into supply duct underneath the electric heater elements (factory-provided, field-installed)	

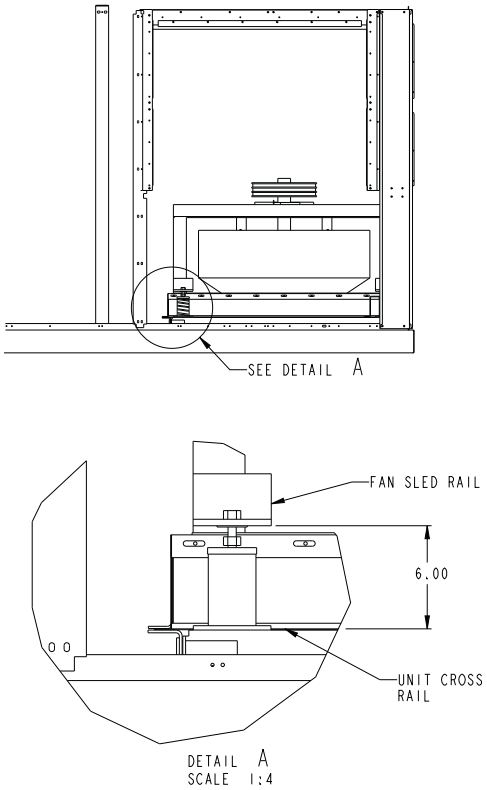

Fig. 52 — Return/Exhaust Fan Shipping Brackets

The optional Greenspeed/low ambient controls are factory-installed. Field-fabricated and installed wind baffles are also required for units in areas with prevailing winds of more than 5 mph and where temperatures drop below 32°F. The Greenspeed/low ambient control permits operation of the unit to an ambient temperature of –20°F. The control regulates the speed of two to four 3-phase fan motors depending on unit size. Fan motor replacement on most units is not necessary.

INSTALL FIELD-FABRICATED WIND BAFFLES

⚠ WARNING

To avoid the possibility of electrical shock, open all disconnects before installing or servicing this accessory.

On size 040-060 units, in areas with prevailing winds of more than 5 mph and where temperatures drop below 32°F, wind baffles must be field fabricated to ensure proper cooling cycle operation at low-ambient temperatures with Greenspeed/low ambient controls. Wind baffles are not needed on size 030, 035, and 070-100 units. See Fig. 53 for baffle details. Use 20-gage galvanized sheet metal, or similar corrosion-resistant material for the baffles. Use field-supplied screws to attach baffles to unit. Screws should be $^1/_4$-in. diameter or larger. Screws should not be more than $^1/_2$-inch in length. Drill required screw holes for mounting baffles.

⚠ CAUTION

To avoid damage to refrigerant coils, electrical components, and wiring use extreme care when drilling screw holes and screwing in fasteners.

Step 18 — Install Unit Accessories

For applications requiring accessories, the following packages are available:

All units:

- barometric relief
- electric heaters
- space temperature sensor
- CO_2 sensor
- space temperature sensor with CO_2 sensor
- relative humidity sensor
- airflow switch
- filter switch
- smoke detector

All vertical return/supply units:

- electric heat

Refer to the individual accessory installation instructions in each accessory package for information on installing accessories.

CONTROLS INSTALLATION

Constant Volume (CV) Units

The 50P2,P4 units may be used in applications with additional control features, options, or accessories. Refer to the appropriate accessory installation instructions for more information on installing that accessory. Control options and accessories available for CV units are:

- thermostats
- enthalpy sensor
- enthalpy switch
- relative humidity sensor
- CEM (controls expansion module)
- Navigator™ hand-held display

CONTROL WIRING

The unit can be controlled with a Carrier-approved accessory electro-mechanical or electronic thermostat that has two stages of cooling, two stages of heating control, and an output for fan control. The thermostat may also include time of day scheduling or use scheduling routines built into the *Comfort*Link controls.

Install the thermostat according to the installation instructions shipped with the accessory thermostat. Locate thermostat assembly on a solid interior wall to sense average temperature. Route thermostat cable or equivalent leads of colored wire from subbase terminals through conduit into the low voltage connections in the main control box. For thermostat TB201 connections, see Fig. 54.

NOTE: For wire runs up to 50 ft, use no. 18 AWG (American Wire Gage) insulated wire (35°C minimum). For over 75 ft, use no. 14 AWG insulated wire (35°C minimum). All wire larger than no. 18 AWG cannot be directly connected at the thermostat and will require a junction box and splice at the thermostat.

Variable Air Volume (VAV) Units

The 50P3,P5 units may be used in applications with additional control features, options, or accessories. Refer to the appropriate accessory installation instructions for more information on installing that accessory. Refer to the Controls and Troubleshooting manual for more information concerning installation and configuration of options and accessories. Control options and accessories available for VAV units are:

- enthalpy sensor
- enthalpy switch
- relative humidity sensor
- CEM (controls expansion module)
- Navigator hand-held display

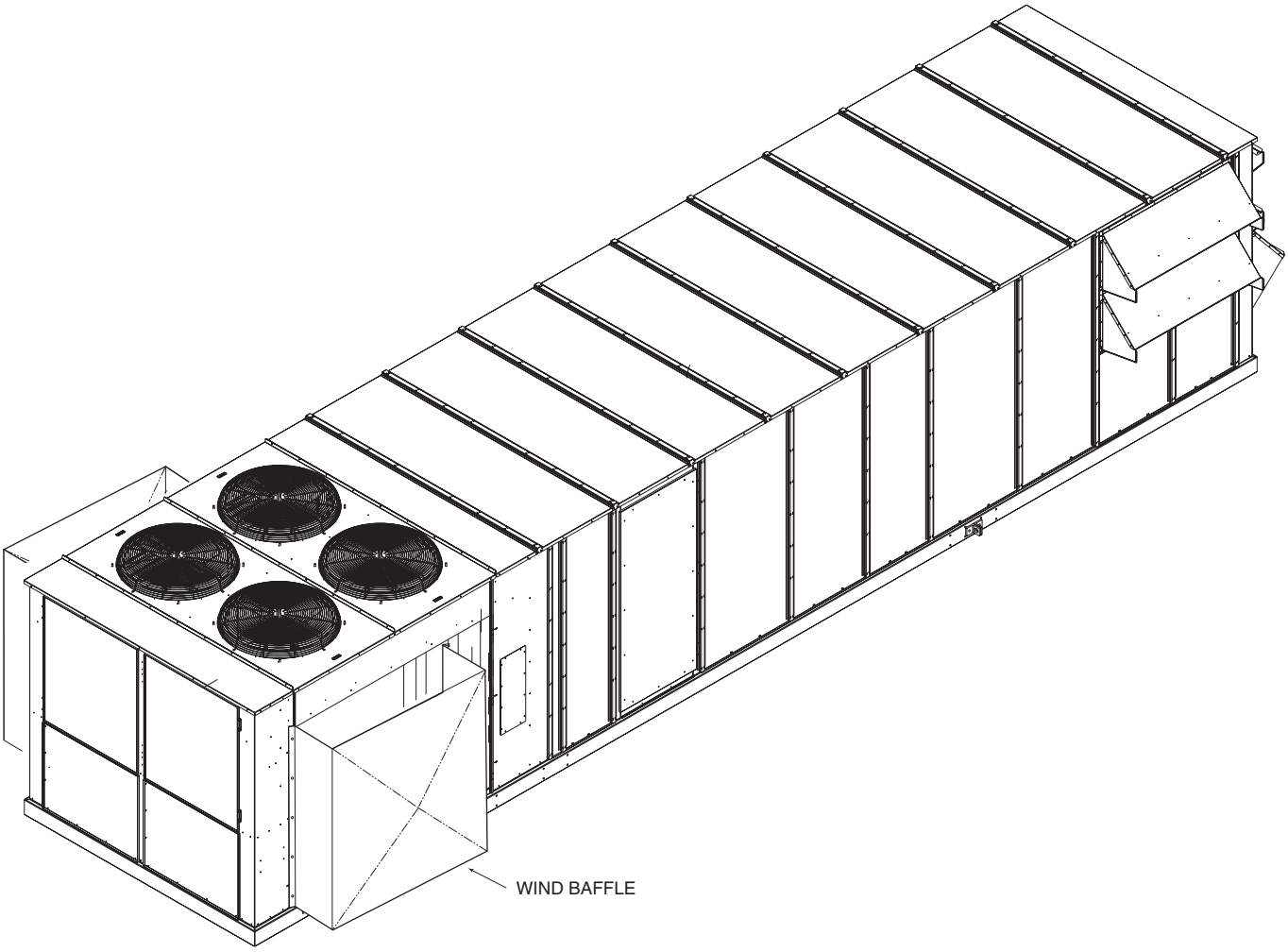

BAFFLE INSTALLATION LOCATION (SIZES 050 AND 060 SHOWN)

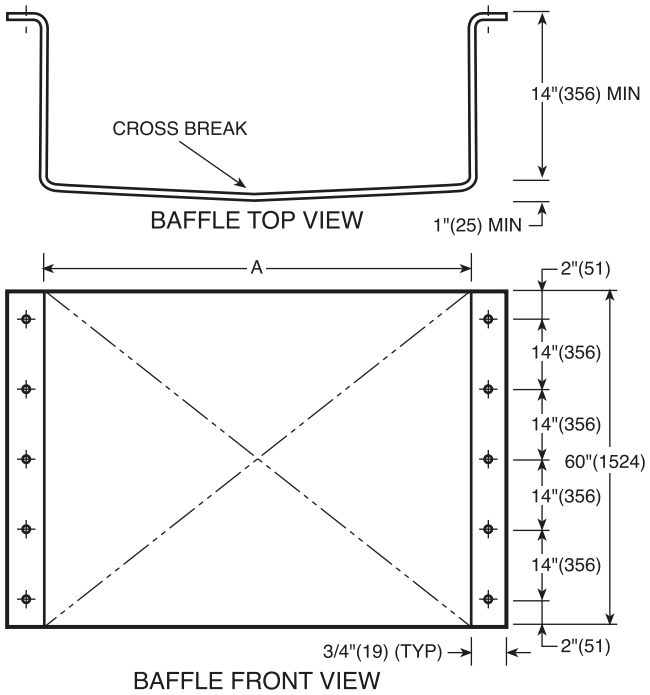

UNIT SIZE	QUANTITY	DIMENSION "A"	
		in.	mm
030,035	Not Used	—	—
040-060	2	78.125 ± 0.125	1984 ± 3
070-100	Not Used	—	—

NOTE: 50P030, 035, and 070-100 units do not require baffles.

Fig. 53 — Wind Baffle Details

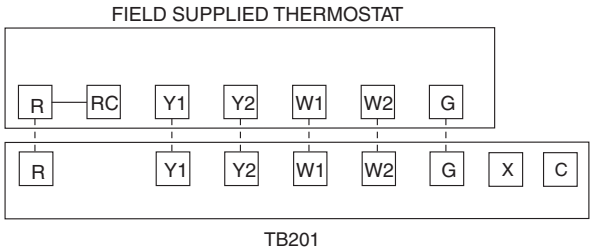

Fig. 54 — Field Control Thermostat Wiring

VAV CONTROL WIRING

The recommended types of control wiring are shown below:

MANUFACTURER	PART NO.	
	Regular Wiring	Plenum Wiring
Alpha	1895	—
American	A21451	A48301
Belden	8205	884421
Columbia	D6451	—
Manhattan	M13402	M64430
Quabik	6130	—

SENSORS

Sensors mounted external to the unit should be wired using single twisted pairs of 20 AWG (American Wire Gage) conductor cable rated for the application, except for the T-56 accessory sensor which requires 3-conductor cable.

HUMIDITY CONTROL AND HOT WATER AND STEAM VALVES

These devices require 20 AWG twisted pair conductor cables rated for the application for the 4 to 20 mA signal.

SPACE TEMPERATURE SENSOR (T-55)

The space temperature sensor (P/N 33ZCT55SPT), if used, is wired to terminals in the unit main control box. To connect the space temperature sensor, see Fig. 55.

SPACE TEMPERATURE SENSOR (T-56)

The space temperature sensor (P/N 33ZCT56SPT) wires are connected to terminals in the unit main control box. To connect the space temperature sensor, see Fig. 55.

COMMUNICATING SPACE TEMPERATURE SENSOR (T-58)

The communicating space temperature sensor (P/N 33ZCT58SPT) is wired to the CCN connections on TB201.

SPACE TEMPERATURE AVERAGING

Applications that require averaging using multiple space temperature sensors can be satisfied using either 4 or 9 sensors as shown in Fig. 56.

NOTE: Only Carrier sensors may be used for standard T-55 space averaging. Sensors must be used in multiples of 1, 4, and 9 only, with total sensors wiring not to exceed 1000 ft.

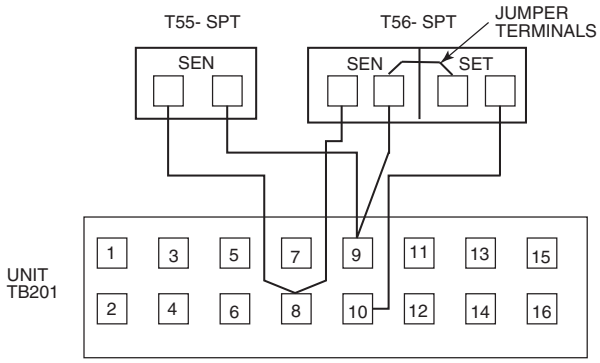

Fig. 55 — T-55 or T-56 Wiring

NOTE: Do not use T-56 sensors for space temperature averaging because the 5-degree offset function will not work in a multiple sensor application.

HEAT INTERLOCK RELAY (VAV UNITS ONLY — NOT NECESSARY FOR DIGITAL AIR VOLUME APPLICATIONS)

Variable air volume (VAV) units using morning warm-up and/or occupied heating require that room terminals be controlled to a position that provides the minimum required heating cfm or greater when the unit goes into Heating mode. The HIR (heat interlock relay) function is provided for this control. When the unit goes into Heating mode, the HIR is energized to provide switch closure or opening (depending on how the field-supplied power source is set up) to open the room terminals. The field connections for the HIR are at TB201, terminals 9 and 10. See Fig. 57.

Option and Accessory Control Wiring

The P Series units may be used in applications with additional control features, options, or accessories. Refer to the Controls and Troubleshooting manual for more information concerning installation and configuration of options and accessories. Figures 57-67 contain wiring information on the following features:

- Heat interlock relay (Fig. 57)
- Outdoor air enthalpy switch (Fig. 58)
- CO_2 space sensor (Fig. 59)
- Filter status switch (Fig. 60)
- Fan status switch (Fig. 61)
- Space humidity sensor (Fig. 62)
- Return air humidity sensor (Fig. 62)
- Return air CO_2 sensor (Fig. 63)
- Return/supply air smoke detector (Fig. 64)
- Smoke control — fire shutdown (Fig. 65)
- Smoke control — purge (Fig. 66)
- Smoke control — evacuation (Fig. 66)
- Smoke control — pressurization (Fig. 66)
- CCN connections (Fig. 67)

Carrier Comfort Network® Interface

The 50P Series units can be connected to the CCN system if desired. The communication bus wiring is supplied and installed in the field. It consists of shielded, 3-conductor cable with shield wire.

The system elements are connected to the communication bus in a daisy chain arrangement. The positive pin of each system element communication connector must be wired to the positive pins of the system element on either side of it, the negative pins must be wired to the negative pins, and the signal pins must be wired to common pins. Wiring connections for the CCN system should be made at the terminal block using the screw terminals. The board also contains an RJ14 CCN plug that can be used to connect a field service computer. There is also another RJ14 LEN connection that is used to download software or connect to a Navigator™ device.

NOTE: Conductors and drain wire must be 20 AWG minimum stranded, tinned copper. Individual conductors must be insulated with PVC, PVC/nylon, vinyl, Teflon[1], or polyethylene. An aluminum/polyester 100% foil shield and an outer jacket of PVC, PVC/nylon, chrome vinyl, or Teflon with a minimum operating temperature range of –4 to 140°F (–20°C to 60°C) is required. See Table 37 for cables that meet the requirements.

1. Teflon is a registered trademark of DuPont.

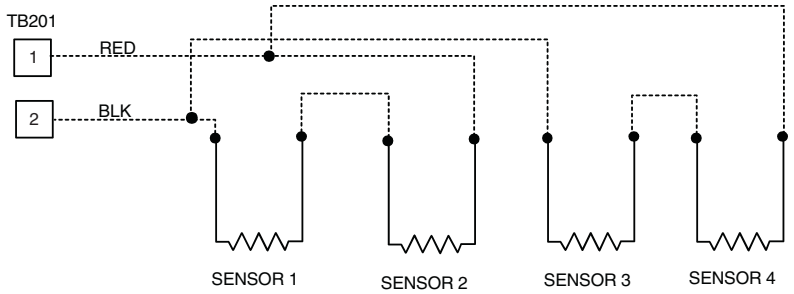

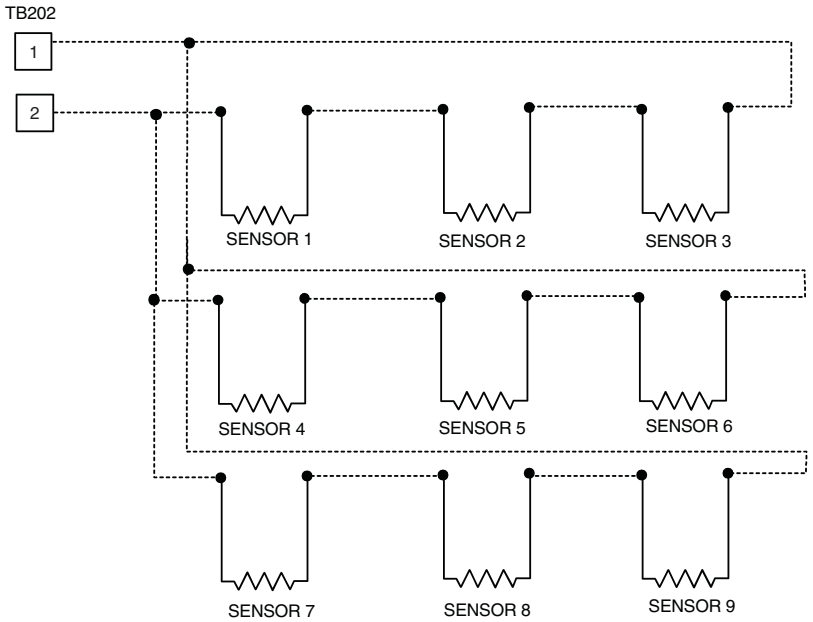

NOTE: Use T-55 sensor only.

Fig. 56 — Space Temperature Averaging Wiring

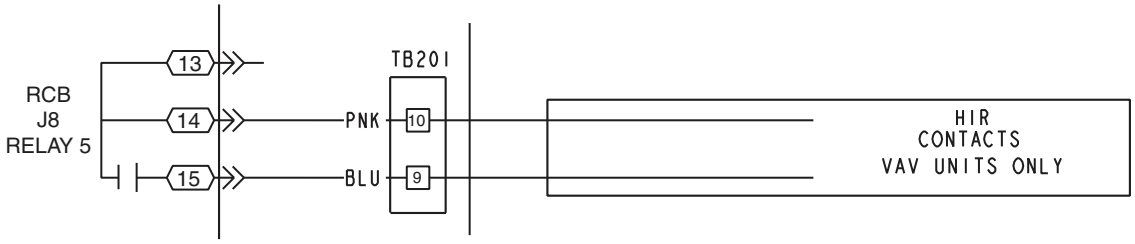

Fig. 57 — Heat Interlock Relay Wiring

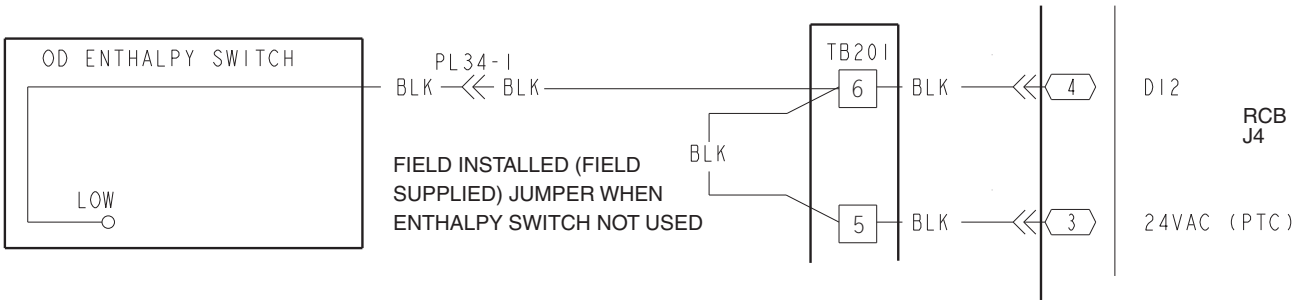

Fig. 58 — Outdoor Air Enthalpy Switch Wiring

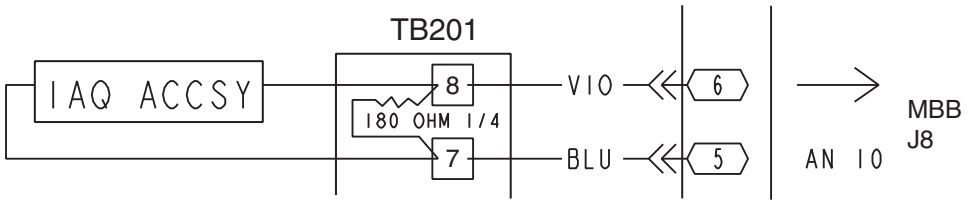

Fig. 59 — CO_2 Space Sensor Wiring

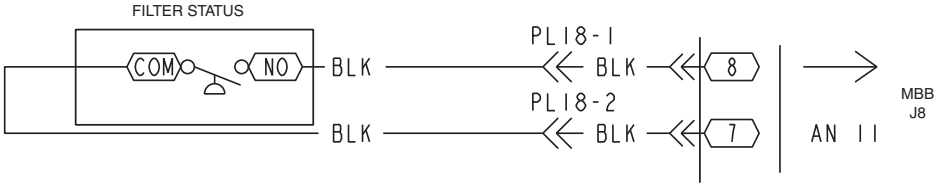

Fig. 60 — Filter Status Wiring

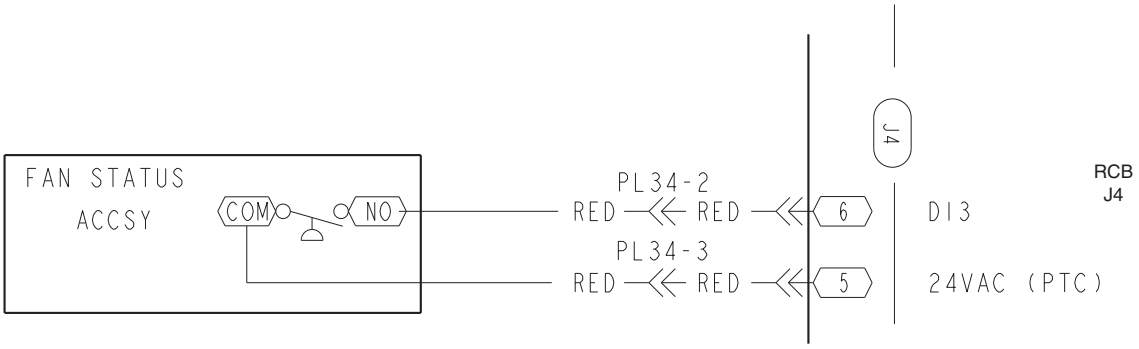

Fig. 61 — Fan Status Switch Wiring

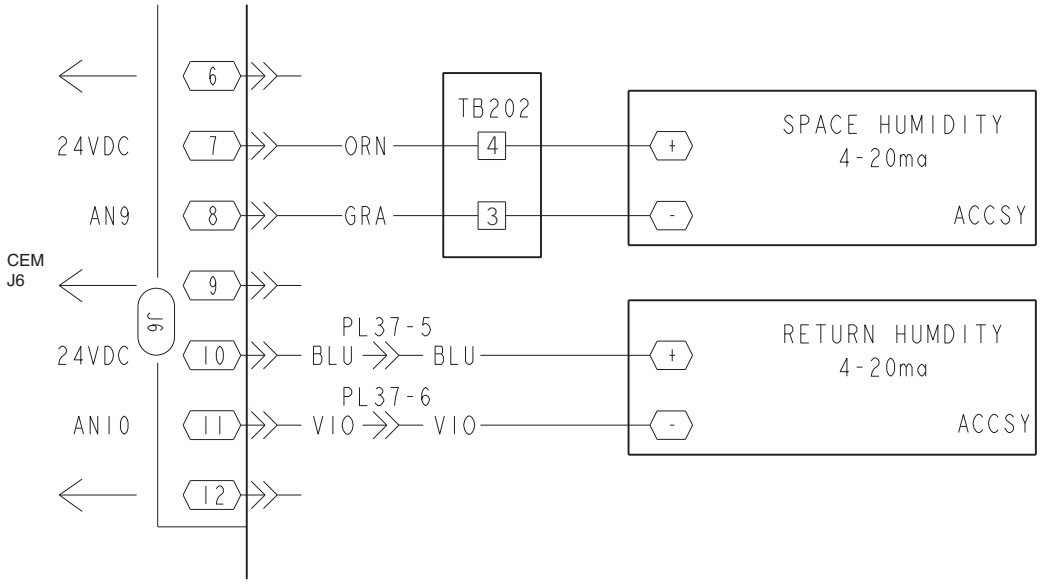

Fig. 62 — Space and Return Air Humidity Sensor Wiring

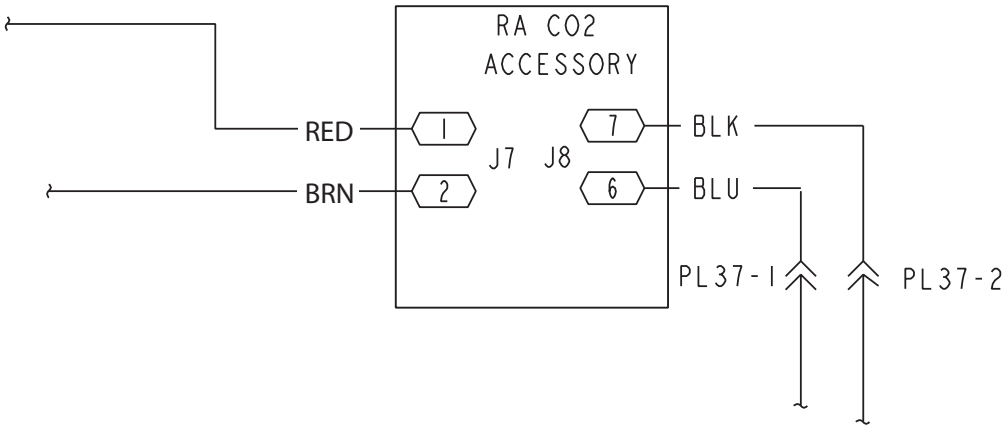

Fig. 63 — Return Air CO_2 Sensor Wiring

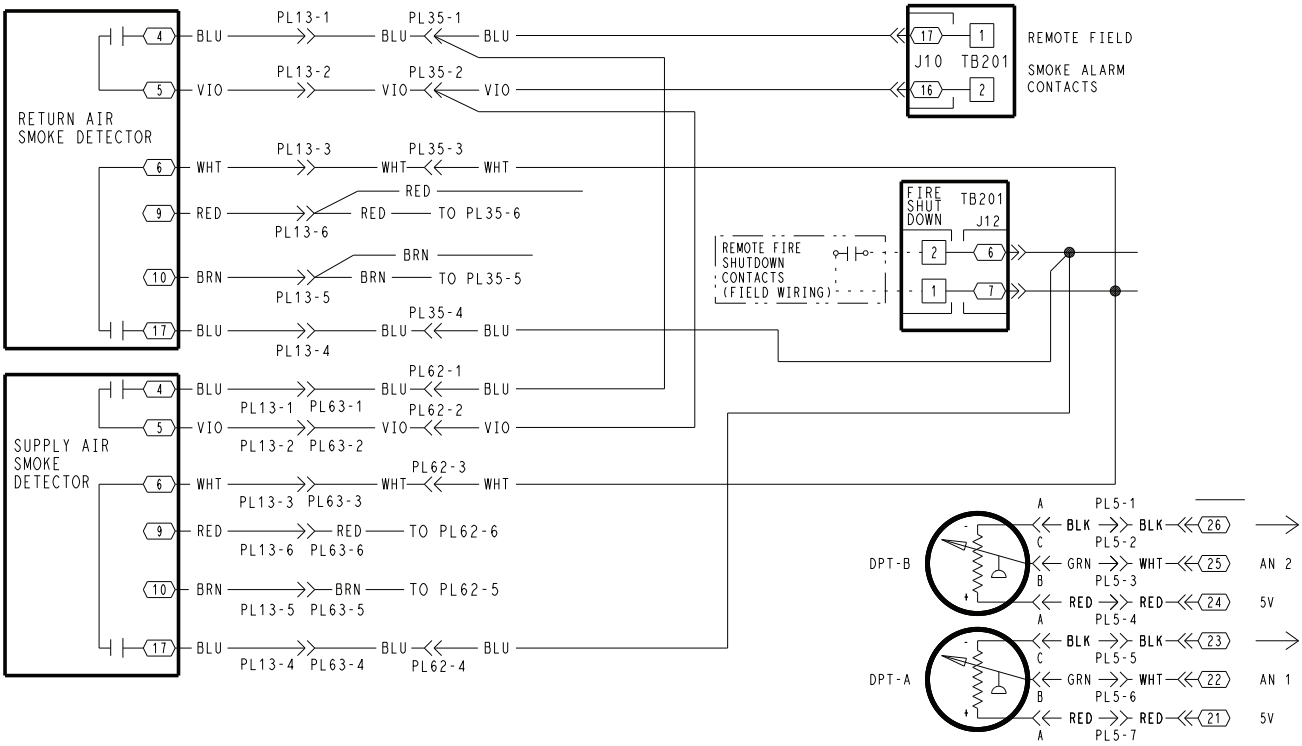

Fig. 64 — Return/Supply Air Smoke Detector Wiring

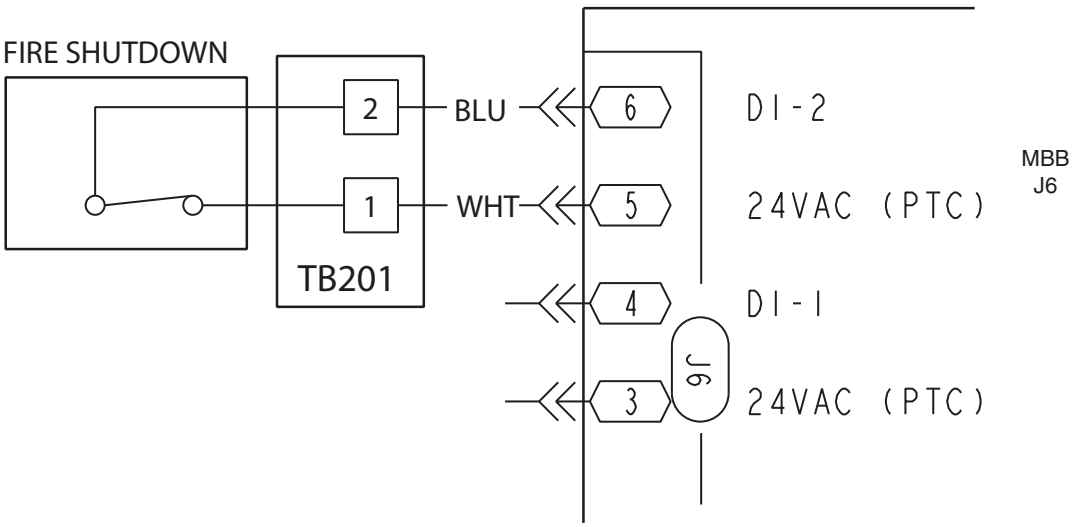

Fig. 65 — Fire Shutdown Wiring

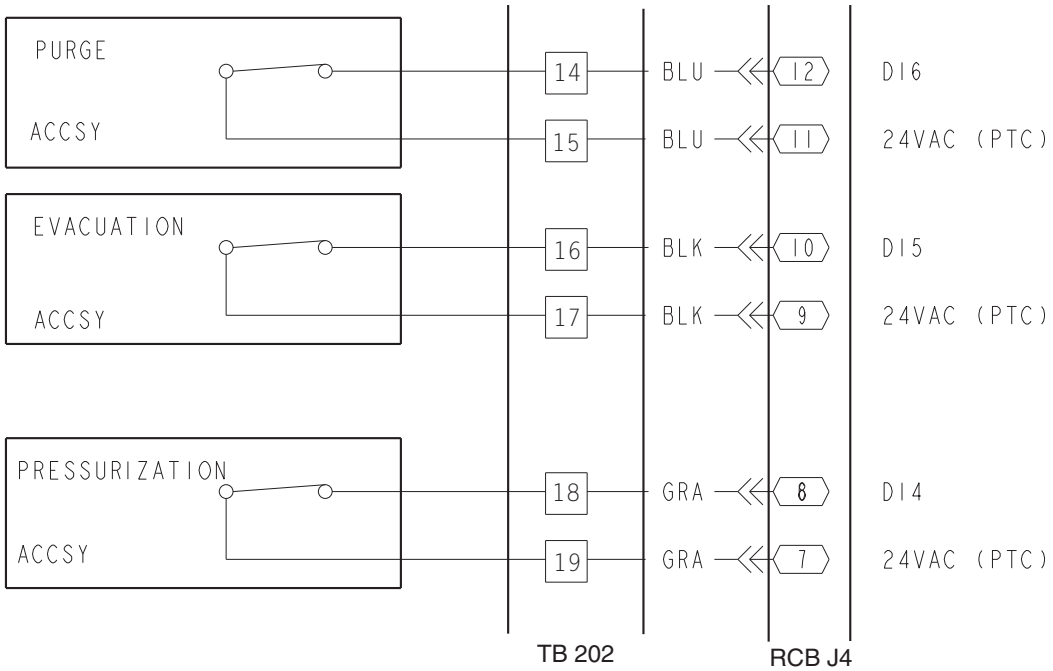

Fig. 66 — Purge, Evacuation, and Pressurization Wiring

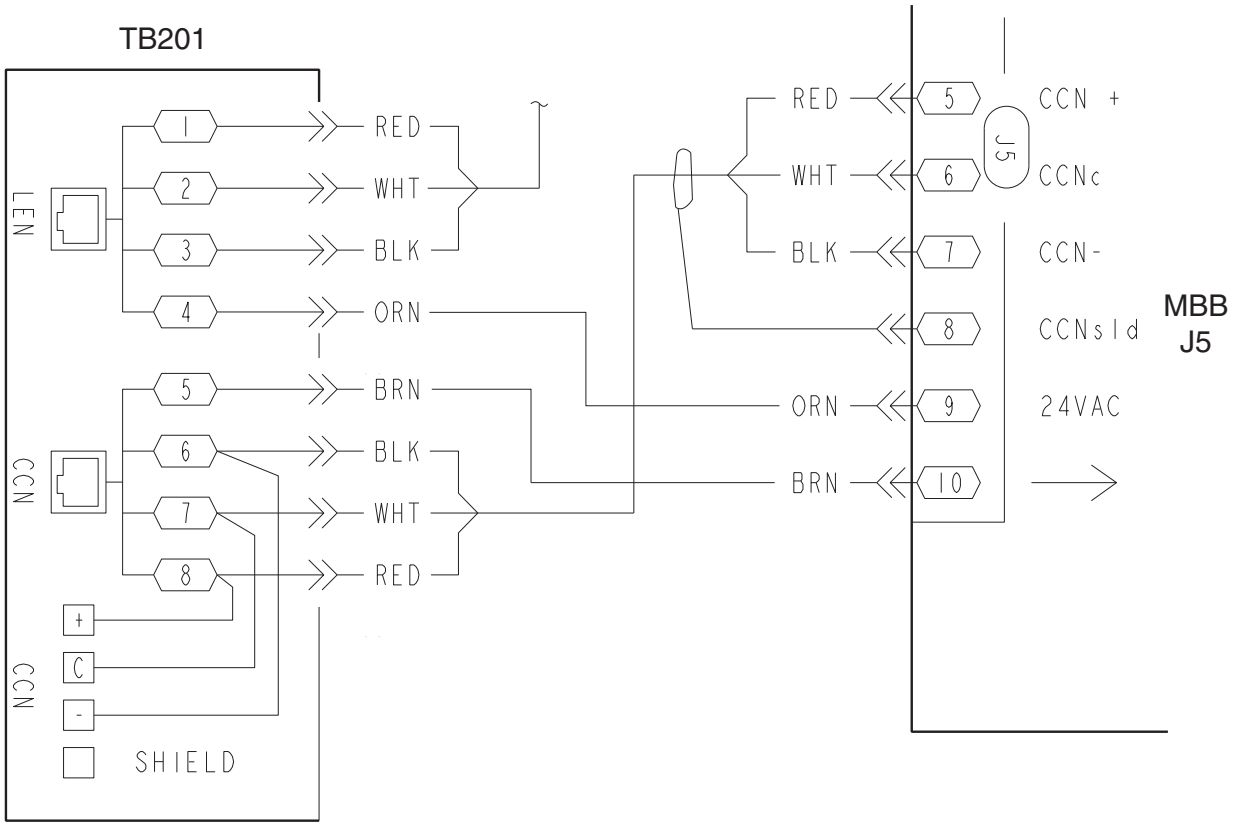

Fig. 67 — CCN Connections

Table 37 — CCN Connection Approved Shielded Cables

MANUFACTURER	CABLE PART NO.
Alpha	2413 or 5463
American	A22503
Belden	8772
Columbia	02525

IMPORTANT: When connecting the CCN communication bus to a system element, use a color coding system for the entire network to simplify installation and checkout.

The following color code is recommended:

SIGNAL TYPE	CCN BUS CONDUCTOR INSULATION COLOR	COMM1 PLUG PIN NO.
+	RED	1
COMMON	WHITE	2
–	BLACK	3

NOTE: If a cable with a different color scheme is selected, a similar color code should be adopted for the entire network.

At each system element, the shields of its communication bus cables must be tied together. If the communication bus is entirely within one building, the resulting continuous field must be connected to a ground at one point only. If the communication bus cable exits from one building and enters another, the shields must be connected to grounds at the lightning suppressor in each building where the cable enters or exits the building (one point per building only).

To connect the unit to the network (Fig. 67):

1. Turn off power to the control box.
2. Cut the CCN wire and strip the ends of the red (+), white (common) and black (–) conductors. (If a different network color scheme is used, substitute appropriate colors.)
3. Wire the CCN system to the screw terminals on the COMM board as follows (Fig. 67):
   a. Secure the red (+) wire to CCN screw terminal + on the COMM board.
   b. Secure the white (common) wire to CCN screw terminal C on the COMM board.
   Secure the black (–) wire to CCN screw terminal - on the COMM board.
   Secure shield wire to CCN screw terminal SHIELD on the COMM board.

IMPORTANT: A shorted CCN bus cable will prevent some routines from running and may prevent unit from starting. If abnormal conditions occur, unplug the connector. If conditions return to normal, check CCN connector, and run new cable if necessary. A short in one section of the bus can cause problems with all system elements on the bus.

Optional UPC Open Installation

WIRING THE UPC OPEN TO THE MS/TP NETWORK

The UPC Open controller communicates using BACnet[1] on an MS/TP network segment communications at 9600 bps, 19.2 kbps, 38.4 kbps, or 76.8 kbps.

Wire the controllers on an MS/TP network segment in a daisy-chain configuration. Wire specifications for the cable are 22 AWG (American Wire Gage) or 24 AWG, low-capacitance, twisted, stranded, shielded copper wire. The maximum length is 2000 ft.

1. BACnet is a registered trademark of ASHRAE (American Society of Heating, Refrigerating, and Air-Conditioning Engineers).

Install a BT485 terminator on the first and last controller on a network segment to add bias and prevent signal distortions due to echoing. See Fig. 68-70.

To wire the UPC Open controller to the BAS network:

1. Pull the screw terminal connector from the controller's BAS Port.
2. Check the communications wiring for shorts and grounds.
3. Connect the communications wiring to the BAS port's screw terminals labeled Net +, Net -, and Shield.

   NOTE: Use the same polarity throughout the network segment.
4. Insert the power screw terminal connector into the UPC Open controller's power terminals if they are not currently connected.
5. Verify communication with the network by viewing a module status report. To perform a module status report using the BACview keypad/display unit, press and hold the "FN" key then press the "." Key.

To install a BT485 terminator, push the BT485 terminator on to the BT485 connector located near the BACnet connector.

NOTE: The BT485 terminator has no polarity associated with it.

To order a BT485 terminator, consult Commercial Products i-Vu® Open Control System Master Prices.

MS/TP WIRING RECOMMENDATIONS

Recommendations are shown in Tables 38 and 39. The wire jacket and UL temperature rating specifications list two acceptable alternatives. The Halar[1] specification has a higher temperature rating and a tougher outer jacket than the SmokeGard[2] specification, and it is appropriate for use in applications where the user is concerned about abrasion. The Halar jacket is also less likely to crack in extremely low temperatures.

NOTE: Use the specified type of wire and cable for maximum signal integrity.

1. Halar is a registered trademark of Solvay Plastics.
2. SmokeGard is a trademark of AlphaGary-Mexichem Corp.

Table 38 — MS/TP Wiring Recommendations

SPECIFICATION	RECOMMMENDATION
Cable	Single twisted pair, low capacitance, CL2P, 22 AWG (7x30), TC foam FEP, plenum rated cable
Conductor	22 or 24 AWG stranded copper (tin plated)
Insulation	Foamed FEP 0.015 in. (0.381 mm) wall 0.060 in. (1.524 mm) O.D.
Color Code	Black/White
Twist Lay	2 in. (50.8 mm) lay on pair 6 twists/foot (20 twists/meter) nominal
Shielding	Aluminum/Mylar shield with 24 AWG TC drain wire
Jacket	SmokeGard Jacket (SmokeGard PVC) 0.021 in. (0.5334 mm) wall 0.175 in. (4.445 mm) O.D. Halar Jacket (E-CTFE) 0.010 in. (0.254 mm) wall 0.144 in. (3.6576 mm) O.D.
DC Resistance	15.2 Ohms/1000 feet (50 Ohms/km) nominal
Capacitance	12.5 pF/ft (41 pF/meter) nominal conductor to conductor
Characteristic Impedance	100 Ohms nominal
Weight	12 lb/1000 feet (17.9 kg/km)
UL Temperature Rating	SmokeGard 167°F (75°C) Halar -40 to 302°F (-40 to 150°C)
Voltage	300 Vac, power limited
Listing	UL: NEC CL2P, or better

LEGEND

AWG — American Wire Gage
CL2P — Class 2 Plenum Cable
DC — Direct Current
FEP — Fluorinated Ethylene Polymer
NEC — National Electrical Code
O.D. — Outside Diameter
TC — Tinned Copper
UL — Underwriters Laboratories

Table 39 — Open System Wiring Specifications and Recommended Vendors

WIRING SPECIFICATIONS		RECOMMENDED VENDORS AND PART NUMBERS			
Wire Type	**Description**	**Connect Air International**	**Belden**	**RMCORP**	**Contractors Wire and Cable**
MS/TP Network (RS-485)	22 AWG, single twisted shielded pair, low capacitance, CL2P, TC foam FEP, plenum rated. See MS/TP Installation Guide for specifications.	W221P-22227	—	25160PV	CLP0520LC
	24 AWG, single twisted shielded pair, low capacitance, CL2P, TC foam FEP, plenum rated. See MS/TP Installation Guide for specifications.	W241P-2000F	82841	25120-OR	—
Rnet	4 conductor, unshielded, CMP, 18 AWG, plenum rated.	W184C-2099BLB	6302UE	21450	CLP0442

LEGEND

AWG — American Wire Gage
CL2P — Class 2 Plenum Cable
CMP — Communications Plenum Rated
FEP — Fluorinated Ethylene Polymer
TC — Tinned Copper

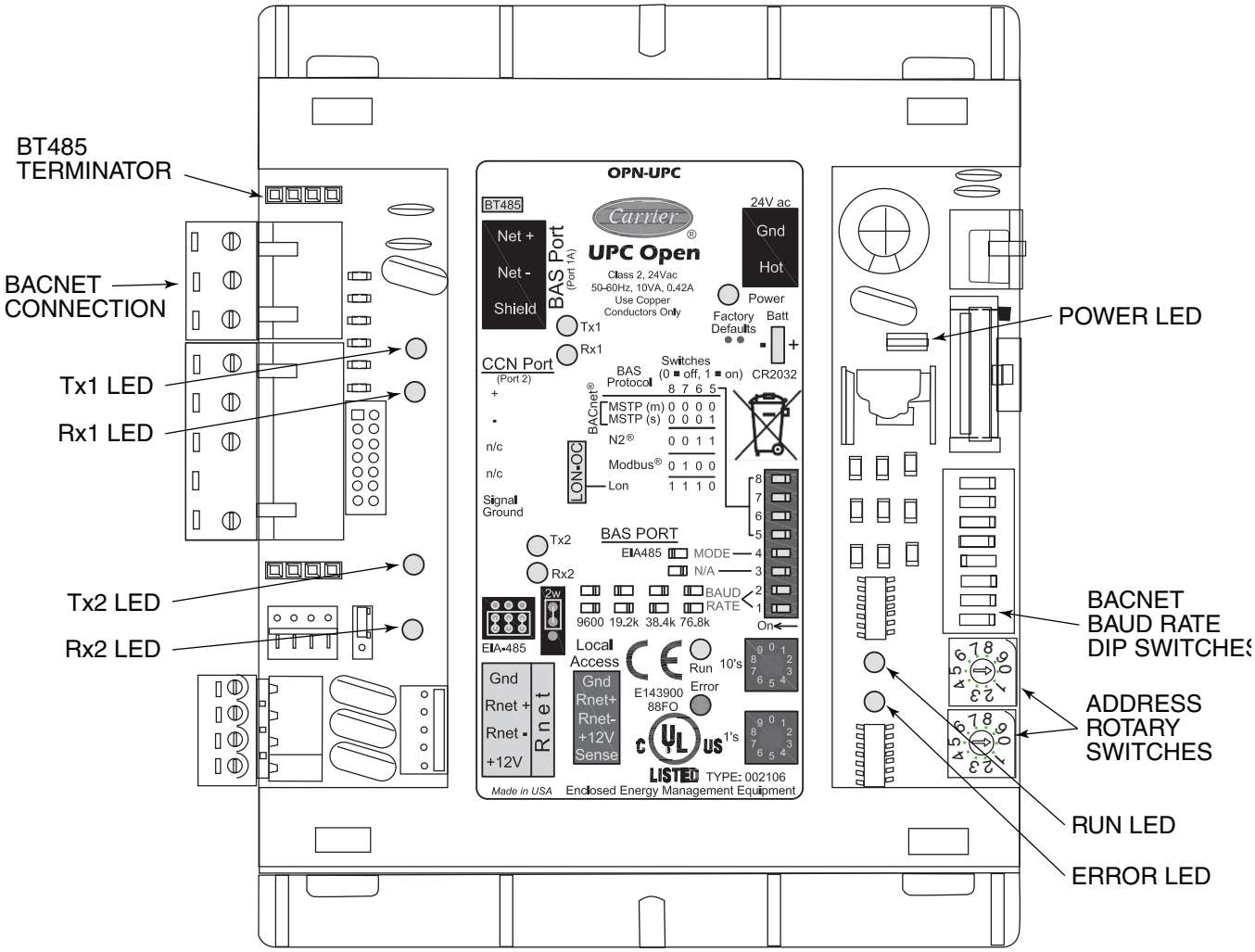

Fig. 68 — UPC Open Controller

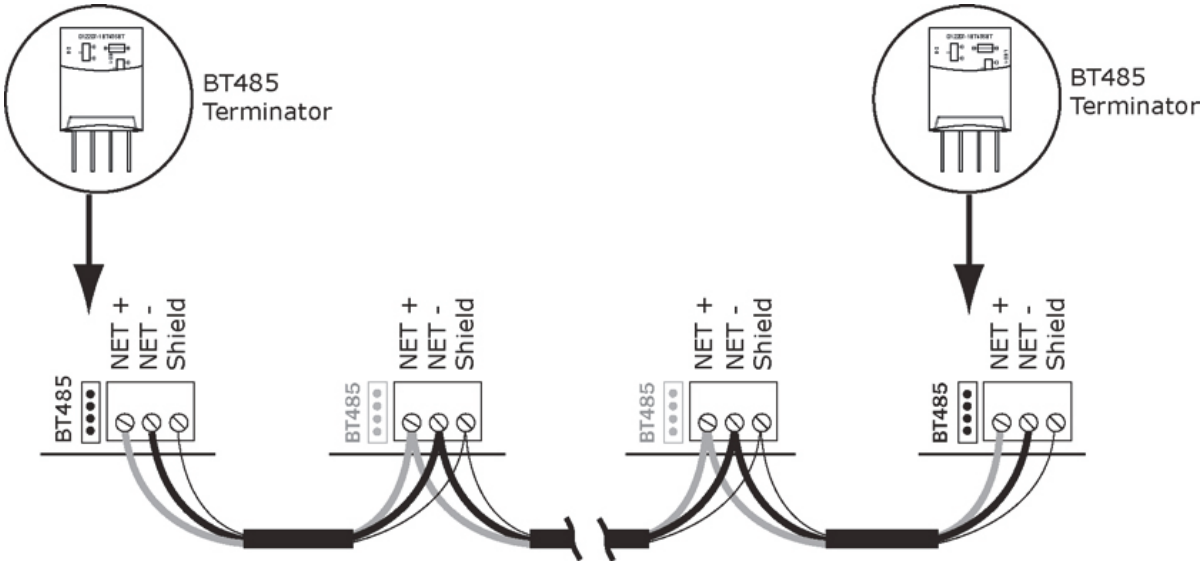

Fig. 69 — Open System Network Wiring

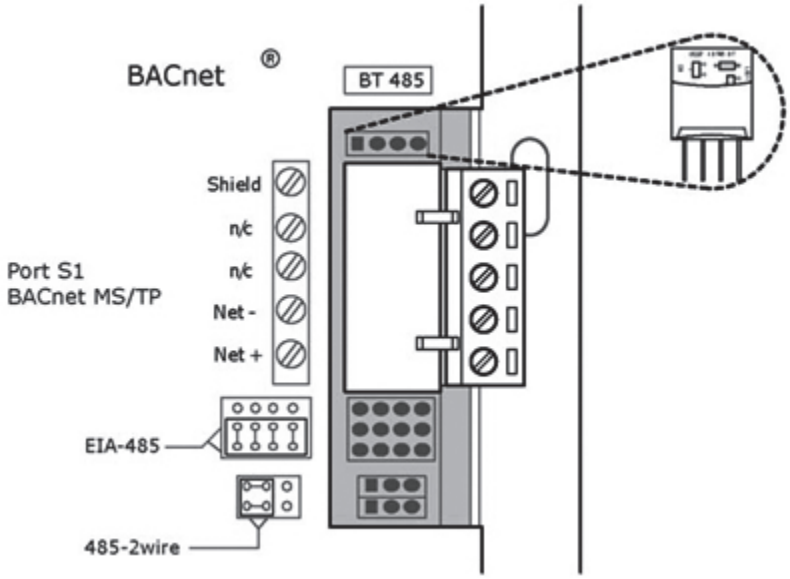

Fig. 70 — BT485 Installation

Smoke Control Modes

Rooftop units can be used for aid in building smoke control in the event of a building fire. The available functions include: Fire Shutdown, Pressurization, Evacuation, and Smoke Purge. These functions are enhanced when multiple rooftop units are used to zone a building. See Table 40 and Fig. 65 and 66.

FIRE SHUTDOWN

Fire Shutdown mode terminates all unit operation (cooling, heating, supply fan, and power exhaust). This mode prevents recirculation of contaminated air back into the space. The mode will not allow admission into the space of unsuitable outside air. See Fig. 65 for wiring.

PRESSURIZATION

Pressurization mode is intended to keep smoke out of a zone. The factory-installed optional economizer is required for this function. Pressurization is accomplished by the following:

- opening the economizer (option)
- running the supply fan (optional inlet guide vanes open or optional VFD at normal duct static pressure set point)
- closing the power exhaust dampers (if installed as option or accessory)
- shutting off the power exhaust fans (if installed as option or accessory)

This allows the space to be overpressurized relative to adjacent zones and prevents or slows entry of smoke into this space from adjacent zones. See Fig. 66 for wiring.

EVACUATION

Evacuation mode removes smoke or undesirable air from interior spaces without reintroducing unsuitable air. The factory-installed optional economizer with option or accessory power exhaust is required. Evacuation is accomplished by the following:

- turning the supply fan off
- opening the economizer (option required)
- running the exhaust fans (option or accessory required)
- opening the exhaust dampers.

See Fig. 66 for wiring.

SMOKE PURGE

Smoke Purge mode removes smoke from the interior spaces and replaces it with fresh outside air. The factory-installed optional economizer with option or accessory power exhaust are required for this function. Smoke purge is accomplished by the following:

- turning supply fan on
- opening the economizer (option required)
- running the exhaust fans (option or accessory required)
- opening the exhaust dampers

See Fig. 66 for wiring.

SMOKE CONTROL INSTALLATION

Implementation of the various Smoke Control Modes on these units requires the installer to modify the unit wiring to add contacts (via either manual switches or relays) that will selectively interrupt and override standard factory control sequences. See Table 40 and Fig. 65 and 66 for more information.

Table 40 — Smoke Control Modes

FUNCTION	MODE			
	Fire Shutdown	Pressurization	Evacuation*	Smoke Purge*
Supply Fan	Off	On	Off	On
VFD†	—	Open/On	—	Open/On
Economizer	Closed	Open	Open	Open
Return Air Damper	Open	Closed	Closed	Closed
Exhaust Fans	Off	Off	On	On
Exhaust Damper	Closed	Closed	Open	Open

LEGEND

VAV — Variable Air Volume
VFD — Variable Frequency Drive

*Power exhaust option required for this mode.
†Applicable to VAV units with appropriate options.

© 2019 Carrier Corporation