# DZ18VC

*Cooling Capacity: 22,400 - 53,000 BTU/h*
*Heating Capacity: 22,200 - 53,500 BTU/h*

## *High-Efficiency, ComfortNet™-Compatible, Split System Heat Pump Up to 19 SEER & 10.0 HSPF*

### Contents


Nomenclature ..... 2
Product Specifications ..... 3
Expanded Cooling Data ..... 4
Expanded Heating Data ..... 20
Sound Power Levels ..... 22
AHRI Ratings ..... 22
Dimensions ..... 23
Wiring Diagram ..... 24


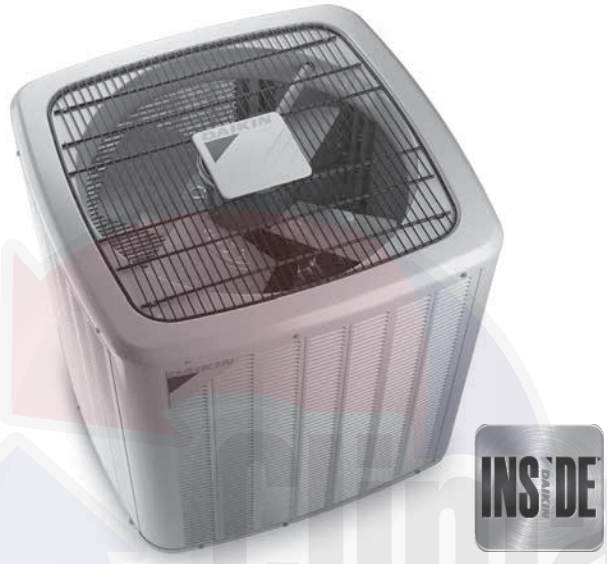


### Standard Features

- Daikin variable-speed swing compressor
- High-density foam compressor sound blanket
- ComfortNet™ Communications System compatible
- Daikin control algorithmic logic
- In communicating mode, only two low-voltage wires to outdoor unit required
- Diagnostic indicator lights, seven-segment LED display, and fault code storage
- Daikin Inside intelligence for diagnostics
- Three-speed quiet condenser fan motor
- Superheat automatic EEV control
- Boost mode ramps up compressor speed to increase cooling capacity
- Coil and ambient temperature sensors
- Suction pressure transducer
- AHRI Certified; ETL Listed

### Cabinet Features

- Grille-style sound control top design
- Custom Nickel Gray powder-paint finish
- 500-hour salt-spray tested
- Wire fan discharge grille
- Steel louver coil guard
- Heavy-gauge galvanized-steel cabinet
- Top and side maintenance access
- Single-panel access to controls with space provided for field-installed accessories
- Sweat connection service valves with easy access to gauge ports
- When properly anchored, meets the 2010 Florida Building Code unit integrity requirements for hurricane-type winds (ABK-20 anchor bracket kits available.)

12 YEAR UNIT REPLACEMENT LIMITED WARRANTY* 12 YEAR PARTS LIMITED WARRANTY* ComfortNet CONTROL SYSTEM Intertek AHRI CERTIFIED ISO 9001

* Complete warranty details available from your local dealer or at www.daikincomfort.com. To receive the 12-Year Unit Replacement Limited Warranty and 12-Year Parts Limited Warranty, online registration must be completed within 60 days of installation. Additional requirements for annual maintenance are required for the Unit Replacement Limited Warranty. Online registration and some of the additional requirements are not required in California or Quebec.

| D | Z | 18 | V | C | 036 | 3 | * | * |
|---|---|---|---|---|---|---|---|---|
| 1 | 2 | 3,4 | 5 | 6 | 7,8,9 | 10 | 11 | 12 |

**Brand**

D - Daikin

**Type**

X - AC R-410A

Z - HP R-410A

**SEER**

14 - 14 SEER 18 - 18 SEER

16 - 16 SEER 20 - 20 SEER

**Compressor**

S - Single Stage V - Variable Speed

T - Two Stage

**Feature Set**

A - Base D - Deluxe

C - ComfortNet 4-Wire Ready N - Nominal

**Nominal Tonnage**

024 - 2 tons 048 - 4 tons

036 - 3 tons 060 - 5 tons

**Voltage**

1 - 208/230 V Single-Phase 60 Hz

**Engineering ***

Major & Minor revisions

* Not used for inventory purposes

Climaproyectos.com

| | DZ18VC 0241** | DZ18VC 0361** | DZ18VC 0481** | DZ18VC 0601** |
|---|---|---|---|---|
| **Capacities and Ratings** | | | | |
| Nominal Cooling (BTU/h) | 22,400 | 33,600 | 45,000 | 53,000 |
| Nominal Heating (BTU/h) | 22,200 | 32,800 | 44,500 | 53,500 |
| **Compressor** | | | | |
| Type | Swing | Swing | Swing | Swing |
| RLA | 12.7 | 19.8 | 27.6 | 31.10 |
| **Condenser Fan Motor** | | | | |
| Horsepower | 1/7 | 1/7 | 1/8 | 1/4 |
| FLA | 1.0 | 1.0 | 1.0 | 1.8 |
| **Refrigeration System** | | | | |
| Refrigerant Line Size | | | | |
| Liquid Line Size (“O.D.) | 3/8" | 3/8" | 3/8” | 3/8" |
| Suction Line Size (“O.D.) | 3/4" | 7/8" | 1 1/8" | 1-1/8" |
| Refrigerant Connection Size | | | | |
| Liquid Valve Size (“O.D.) | 3/8" | 3/8" | 3/8" | 3/8" |
| Suction Valve Size (“O.D.) | 3/4" | 7/8" | 7/8" | 7/8" |
| Valve Connection Type | Front-seated | Front-seated | Front-seated | Front-seated |
| Refrigerant Charge | 139 | 139 | 160 | 237 |
| Expansion Device | EEV | EEV | EEV | EEV |
| Superheat at Service Valve | Auto-control | Auto-control | Auto-control | Auto-control |
| Subcooling at Service Valve | 10-12° F | 13-15° F | 8-10° F | 11-13°F |
| **Electrical Data** | | | | |
| Volts-Phase (60 Hz) | 208-230/ 1 | 208-230/ 1 | 208-230/ 1 | 208-230/1/60Hz |
| Minimum Circuit Ampacity [2] | 13.6 | 20.7 | 28.6 | 32.9 |
| Max. Overcurrent Protection [3] | 15 | 25 | 30 | 35 |
| Min / Max Volts | 197/253 | 197/253 | 197/253 | 197/253 |
| Electrical Conduit Size | 1/2" or 3/4" | 1/2” or 3/4" | 1/2” or 3/4" | 1/2" or 3/4" |
| **Equipment Weight (lbs)** | 155 | 185 | 200 | 200 |
| **Ship Weight (lbs)** | 175 | 205 | 220 | 220 |

[1] Tested and rated in accordance with AHRI Standard 210/240

[2] Wire size should be determined in accordance with National Electrical Codes; extensive wire runs will require larger wire sizes

[3] Must use time-delay fuses or HACR-type circuit breakers of the same size as noted.

**Notes**

- Always check the S&R plate for electrical data on the unit being installed.
- Installer will need to supply ⅞” to 1⅛” adapters for suction line connections.
- Unit is charged with refrigerant for 15’ of ⅜” liquid line. System charge must be adjusted per Installation Instructions Final Charge Procedure.

Climaproyectos.com

## Expanded Cooling Data — DZ18VC0241A* / DV37PECC14A* (High Stage)

| | | | Outdoor Ambient Temperature | | | | | | | | | | | | | | | | | | | | | | | |
|---|---|---|---|---|---|---|---|---|---|---|---|---|---|---|---|---|---|---|---|---|---|---|---|---|---|---|
| | | | 65 | | | | 75 | | | | 85 | | | | 95 | | | | 105 | | | | 115 | | | |
| | | | Entering Indoor Wet Bulb Temperature | | | | | | | | | | | | | | | | | | | | | | | |
| ID DB | Air | ID WB | 59 | 63 | 67 | 71 | 59 | 63 | 67 | 71 | 59 | 63 | 67 | 71 | 59 | 63 | 67 | 71 | 59 | 63 | 67 | 71 | 59 | 63 | 67 | 71 |
| 70 | 720 | MBh | 22,845 | 23,167 | 23,848 | --- | 22,641 | 22,963 | 23,644 | --- | 22,046 | 22,368 | 23,049 | --- | 21,022 | 21,344 | 22,025 | --- | 19,771 | 20,093 | 20,774 | --- | 18,629 | 18,951 | 19,631 | --- |
| | | S/T | 0.63 | 0.55 | 0.41 | --- | 0.64 | 0.56 | 0.42 | --- | 0.66 | 0.58 | 0.45 | --- | 1.00 | 0.60 | 0.47 | --- | 1.00 | 0.63 | 0.49 | --- | 1.00 | 0.68 | 0.54 | --- |
| | | ΔT | 18.56 | 16.83 | 13.58 | --- | 18.52 | 16.78 | 13.53 | --- | 18.76 | 17.02 | 13.78 | --- | 18.50 | 16.76 | 13.52 | --- | 18.27 | 16.53 | 13.28 | --- | 19.35 | 17.62 | 14.37 | --- |
| | | Pr Suc | 126.37 | 127.93 | 131.14 | --- | 134.04 | 135.59 | 138.80 | --- | 140.75 | 142.31 | 145.52 | --- | 146.43 | 147.99 | 151.20 | --- | 152.00 | 153.56 | 156.77 | --- | 158.98 | 160.53 | 163.74 | --- |
| | | Pr Dis | 249.48 | 250.56 | 252.31 | --- | 288.77 | 289.85 | 291.61 | --- | 329.94 | 331.02 | 332.78 | --- | 374.28 | 375.36 | 377.11 | --- | 422.07 | 423.15 | 424.90 | --- | 473.08 | 474.16 | 475.91 | --- |
| | | Amps | 4.81 | 4.80 | 4.79 | --- | 5.45 | 5.45 | 5.43 | --- | 6.17 | 6.17 | 6.15 | --- | 6.95 | 6.94 | 6.93 | --- | 7.82 | 7.81 | 7.80 | --- | 8.84 | 8.83 | 8.82 | --- |
| | | Power | 1,236 | 1,235 | 1,233 | --- | 1,385 | 1,384 | 1,381 | --- | 1,550 | 1,549 | 1,546 | --- | 1,729 | 1,728 | 1,726 | --- | 1,929 | 1,928 | 1,926 | --- | 2,164 | 2,163 | 2,160 | --- |
| | 800 | MBh | 23,089 | 23,411 | 24,091 | --- | 22,885 | 23,207 | 23,887 | --- | 22,290 | 22,612 | 23,292 | --- | 21,266 | 21,588 | 22,269 | --- | 20,015 | 20,336 | 21,017 | --- | 18,872 | 19,194 | 19,875 | --- |
| | | S/T | 0.68 | 0.60 | 0.46 | --- | 0.68 | 0.61 | 0.47 | --- | 0.71 | 0.63 | 0.49 | --- | 1.00 | 0.65 | 0.51 | --- | 1.00 | 0.67 | 0.54 | --- | 1.00 | 0.73 | 0.59 | --- |
| | | ΔT | 17.74 | 16.00 | 12.76 | --- | 17.69 | 15.96 | 12.71 | --- | 17.94 | 16.20 | 12.96 | --- | 17.68 | 15.94 | 12.69 | --- | 17.44 | 15.71 | 12.46 | --- | 18.53 | 16.79 | 13.55 | --- |
| | | Pr Suc | 127.86 | 129.42 | 132.63 | --- | 135.53 | 137.09 | 140.30 | --- | 142.25 | 143.80 | 147.01 | --- | 147.92 | 149.48 | 152.69 | --- | 153.50 | 155.05 | 158.26 | --- | 160.47 | 162.03 | 165.24 | --- |
| | | Pr Dis | 251.16 | 252.24 | 253.99 | --- | 290.45 | 291.54 | 293.29 | --- | 331.63 | 332.71 | 334.46 | --- | 375.96 | 377.04 | 378.79 | --- | 423.75 | 424.83 | 426.59 | --- | 474.76 | 475.84 | 477.59 | --- |
| | | Amps | 4.83 | 4.83 | 4.82 | --- | 5.48 | 5.47 | 5.46 | --- | 6.20 | 6.19 | 6.18 | --- | 6.98 | 6.97 | 6.96 | --- | 7.84 | 7.84 | 7.83 | --- | 8.87 | 8.86 | 8.85 | --- |
| | | Power | 1,242 | 1,241 | 1,239 | --- | 1,391 | 1,390 | 1,387 | --- | 1,556 | 1,555 | 1,552 | --- | 1,735 | 1,734 | 1,732 | --- | 1,935 | 1,934 | 1,932 | --- | 2,170 | 2,169 | 2,166 | --- |
| | 880 | MBh | 23,371 | 23,693 | 24,374 | --- | 23,167 | 23,489 | 24,170 | --- | 22,572 | 22,894 | 23,575 | --- | 21,548 | 21,870 | 22,551 | --- | 20,297 | 20,619 | 21,299 | --- | 19,154 | 19,476 | 20,157 | --- |
| | | S/T | 0.71 | 0.63 | 0.49 | --- | 0.71 | 0.63 | 0.50 | --- | 1.00 | 0.66 | 0.52 | --- | 1.00 | 0.68 | 0.54 | --- | 1.00 | 0.70 | 0.56 | --- | 1.00 | 1.00 | 0.62 | --- |
| | | ΔT | 17.02 | 15.29 | 12.04 | --- | 16.98 | 15.24 | 11.99 | --- | 17.22 | 15.48 | 12.24 | --- | 16.96 | 15.22 | 11.98 | --- | 16.73 | 14.99 | 11.74 | --- | 17.81 | 16.08 | 12.83 | --- |
| | | Pr Suc | 129.49 | 131.04 | 134.25 | --- | 137.15 | 138.71 | 141.92 | --- | 143.87 | 145.42 | 148.63 | --- | 149.54 | 151.10 | 154.31 | --- | 155.12 | 156.67 | 159.88 | --- | 162.09 | 163.65 | 166.86 | --- |
| | | Pr Dis | 252.80 | 253.88 | 255.63 | --- | 292.10 | 293.18 | 294.93 | --- | 333.27 | 334.35 | 336.10 | --- | 377.60 | 378.68 | 380.43 | --- | 425.40 | 426.48 | 428.23 | --- | 476.40 | 477.48 | 479.23 | --- |
| | | Amps | 4.86 | 4.85 | 4.84 | --- | 5.50 | 5.49 | 5.48 | --- | 6.22 | 6.21 | 6.20 | --- | 7.00 | 6.99 | 6.98 | --- | 7.87 | 7.86 | 7.85 | --- | 8.89 | 8.88 | 8.87 | --- |
| | | Power | 1,248 | 1,247 | 1,244 | --- | 1,396 | 1,395 | 1,392 | --- | 1,561 | 1,560 | 1,558 | --- | 1,740 | 1,739 | 1,737 | --- | 1,941 | 1,939 | 1,937 | --- | 2,175 | 2,174 | 2,172 | --- |
| 75 | 720 | MBh | 22,858 | 23,180 | 23,861 | 24,901 | 22,654 | 22,976 | 23,657 | 24,697 | 22,059 | 22,381 | 23,062 | 24,102 | 21,035 | 21,357 | 22,038 | 23,078 | 19,784 | 20,106 | 20,787 | 21,827 | 18,642 | 18,964 | 19,645 | 20,684 |
| | | S/T | 0.76 | 0.68 | 0.55 | 0.40 | 1.00 | 0.69 | 0.55 | 0.41 | 1.00 | 0.72 | 0.58 | 0.43 | 1.00 | 0.74 | 0.60 | 0.45 | 1.00 | 0.76 | 0.62 | 0.47 | 1.00 | 1.00 | 0.67 | 0.53 |
| | | ΔT | 22.38 | 20.65 | 17.40 | 14.04 | 22.34 | 20.60 | 17.35 | 13.99 | 22.58 | 20.84 | 17.60 | 14.24 | 22.32 | 20.58 | 17.34 | 13.97 | 22.09 | 20.35 | 17.10 | 13.74 | 23.17 | 21.44 | 18.19 | 14.83 |
| | | Pr Suc | 126.40 | 127.96 | 131.17 | 136.53 | 134.07 | 135.62 | 138.83 | 144.20 | 140.78 | 142.34 | 145.55 | 150.91 | 146.46 | 148.02 | 151.22 | 156.59 | 152.03 | 153.59 | 156.80 | 162.16 | 159.01 | 160.56 | 163.77 | 169.14 |
| | | Pr Dis | 249.70 | 250.78 | 252.53 | 256.87 | 288.99 | 290.07 | 291.83 | 296.17 | 330.16 | 331.25 | 333.00 | 337.34 | 374.50 | 375.58 | 377.33 | 381.67 | 422.29 | 423.37 | 425.13 | 429.47 | 473.30 | 474.38 | 476.13 | 480.47 |
| | | Amps | 4.80 | 4.80 | 4.79 | 4.84 | 5.45 | 5.44 | 5.43 | 5.48 | 6.17 | 6.16 | 6.15 | 6.20 | 6.94 | 6.94 | 6.93 | 6.98 | 7.81 | 7.81 | 7.80 | 7.85 | 8.84 | 8.83 | 8.82 | 8.87 |
| | | Power | 1,235 | 1,234 | 1,232 | 1,243 | 1,384 | 1,383 | 1,380 | 1,391 | 1,549 | 1,548 | 1,546 | 1,557 | 1,728 | 1,727 | 1,725 | 1,736 | 1,928 | 1,927 | 1,925 | 1,936 | 2,163 | 2,162 | 2,159 | 2,171 |
| | 800 | MBh | 23,102 | 23,424 | 24,105 | 25,145 | 22,898 | 23,220 | 23,901 | 24,941 | 22,303 | 22,625 | 23,306 | 24,346 | 21,279 | **21,601** | 22,282 | 23,322 | 20,028 | 20,350 | 21,031 | 22,070 | 18,886 | 19,207 | 19,888 | 20,928 |
| | | S/T | 0.81 | 0.73 | 0.59 | 0.45 | 1.00 | 0.74 | 0.60 | 0.45 | 1.00 | 0.76 | 0.62 | 0.48 | 1.00 | **0.78** | 0.64 | 0.50 | 1.00 | 1.00 | 0.67 | 0.52 | 1.00 | 1.00 | 0.72 | 0.57 |
| | | ΔT | 21.56 | 19.82 | 16.58 | 13.22 | 21.51 | 19.78 | 16.53 | 13.17 | 21.76 | 20.02 | 16.78 | 13.41 | 21.50 | **19.76** | 16.51 | 13.15 | 21.26 | 19.53 | 16.28 | 12.92 | 22.35 | 20.61 | 17.37 | 14.01 |
| | | Pr Suc | 127.89 | 129.45 | 132.66 | 138.03 | 135.56 | 137.12 | 140.33 | 145.69 | 142.28 | 143.83 | 147.04 | 152.41 | 147.95 | **149.51** | 152.72 | 158.09 | 153.53 | 155.08 | 158.29 | 163.66 | 160.50 | 162.06 | 165.27 | 170.63 |
| | | Pr Dis | 251.38 | 252.46 | 254.21 | 258.55 | 290.67 | 291.76 | 293.51 | 297.85 | 331.85 | 332.93 | 334.68 | 339.02 | 376.18 | **377.26** | 379.01 | 383.35 | 423.97 | 425.05 | 426.81 | 431.15 | 474.98 | 476.06 | 477.81 | 482.15 |
| | | Amps | 4.83 | 4.82 | 4.81 | 4.86 | 5.47 | 5.47 | 5.46 | 5.51 | 6.19 | 6.19 | 6.18 | 6.23 | 6.97 | **6.97** | 6.95 | 7.00 | 7.84 | 7.84 | 7.82 | 7.87 | 8.86 | 8.86 | 8.85 | 8.89 |
| | | Power | 1,242 | 1,240 | 1,238 | 1,249 | 1,390 | 1,389 | 1,386 | 1,397 | 1,555 | 1,554 | 1,552 | 1,563 | 1,734 | **1,733** | 1,731 | 1,742 | 1,934 | 1,933 | 1,931 | 1,942 | 2,169 | 2,168 | 2,165 | 2,177 |
| | 880 | MBh | 23,384 | 23,706 | 24,387 | 25,427 | 23,180 | 23,502 | 24,183 | 25,223 | 22,585 | 22,907 | 23,588 | 24,628 | 21,561 | 21,883 | 22,564 | 23,604 | 20,310 | 20,632 | 21,313 | 22,353 | 19,168 | 19,490 | 20,170 | 21,210 |
| | | S/T | 0.84 | 0.76 | 0.62 | 0.48 | 1.00 | 0.77 | 0.63 | 0.48 | 1.00 | 0.79 | 0.65 | 0.51 | 1.00 | 0.81 | 0.67 | 0.53 | 1.00 | 1.00 | 0.70 | 0.55 | 1.00 | 1.00 | 0.75 | 0.60 |
| | | ΔT | 20.85 | 19.11 | 15.86 | 12.50 | 20.80 | 19.06 | 15.82 | 12.45 | 21.04 | 19.30 | 16.06 | 12.70 | 20.78 | 19.04 | 15.80 | 12.44 | 20.55 | 18.81 | 15.57 | 12.20 | 21.64 | 19.90 | 16.65 | 13.29 |
| | | Pr Suc | 129.52 | 131.07 | 134.28 | 139.65 | 137.18 | 138.74 | 141.95 | 147.31 | 143.90 | 145.45 | 148.66 | 154.03 | 149.57 | 151.13 | 154.34 | 159.71 | 155.15 | 156.70 | 159.91 | 165.28 | 162.12 | 163.68 | 166.89 | 172.25 |
| | | Pr Dis | 253.02 | 254.10 | 255.85 | 260.19 | 292.32 | 293.40 | 295.15 | 299.49 | 333.49 | 334.57 | 336.32 | 340.66 | 377.82 | 378.90 | 380.65 | 384.99 | 425.62 | 426.70 | 428.45 | 432.79 | 476.62 | 477.70 | 479.45 | 483.80 |
| | | Amps | 4.85 | 4.85 | 4.83 | 4.88 | 5.50 | 5.49 | 5.48 | 5.53 | 6.22 | 6.21 | 6.20 | 6.25 | 6.99 | 6.99 | 6.98 | 7.03 | 7.86 | 7.86 | 7.85 | 7.90 | 8.88 | 8.88 | 8.87 | 8.92 |
| | | Power | 1,247 | 1,246 | 1,243 | 1,254 | 1,395 | 1,394 | 1,391 | 1,403 | 1,560 | 1,559 | 1,557 | 1,568 | 1,740 | 1,738 | 1,736 | 1,747 | 1,940 | 1,938 | 1,936 | 1,947 | 2,174 | 2,173 | 2,171 | 2,182 |

IDB*: Entering Indoor Dry Bulb Temperature

Shaded area reflects ACCA (TVA) conditions.

kW = Total system power

High and low pressures are measured at the liquid and suction service valves.

Amps = outdoor unit amps

## Expanded Cooling Data — DZ18VC0241A* / DV37PECC14A* (High Stage)

| | | | Outdoor Ambient Temperature | | | | | | | | | | | | | | | | | | | | | | | |
|---|---|---|---|---|---|---|---|---|---|---|---|---|---|---|---|---|---|---|---|---|---|---|---|---|---|---|
| | | | 65 | | | | 75 | | | | 85 | | | | 95 | | | | 105 | | | | 115 | | | |
| | | | Entering Indoor Wet Bulb Temperature | | | | | | | | | | | | | | | | | | | | | | | |
| ID DB | Air | ID WB | 59 | 63 | 67 | 71 | 59 | 63 | 67 | 71 | 59 | 63 | 67 | 71 | 59 | 63 | 67 | 71 | 59 | 63 | 67 | 71 | 59 | 63 | 67 | 71 |
| 80 | 720 | MBh | 22,976 | 23,298 | 23,979 | 25,019 | 22,772 | 23,094 | 23,775 | 24,815 | 22,177 | 22,499 | 23,180 | 24,220 | 21,154 | 21,475 | 22,156 | 23,196 | 19,902 | 20,224 | 20,905 | 21,945 | 18,760 | 19,082 | 19,763 | 20,803 |
| | | S/T | 1.00 | 0.81 | 0.67 | 0.53 | 1.00 | 0.82 | 0.68 | 0.53 | 1.00 | 0.84 | 0.71 | 0.56 | 1.00 | 1.00 | 0.72 | 0.58 | 1.00 | 1.00 | 0.75 | 0.60 | 1.00 | 1.00 | 0.80 | 0.65 |
| | | ΔT | 26.23 | 24.49 | 21.25 | 17.89 | 26.18 | 24.45 | 21.20 | 17.84 | 26.43 | 24.69 | 21.45 | 18.08 | 26.17 | 24.43 | 21.18 | 17.82 | 25.93 | 24.20 | 20.95 | 17.59 | 27.02 | 25.28 | 22.04 | 18.68 |
| | | Pr Suc | 126.96 | 128.51 | 131.72 | 137.09 | 134.62 | 136.18 | 139.39 | 144.76 | 141.34 | 142.90 | 146.11 | 151.47 | 147.02 | 148.57 | 151.78 | 157.15 | 152.59 | 154.15 | 157.35 | 162.72 | 159.56 | 161.12 | 164.33 | 169.70 |
| | | Pr Dis | 250.15 | 251.24 | 252.99 | 257.33 | 289.45 | 290.53 | 292.28 | 296.63 | 330.62 | 331.70 | 333.45 | 337.80 | 374.96 | 376.04 | 377.79 | 382.13 | 422.75 | 423.83 | 425.58 | 429.92 | 473.76 | 474.84 | 476.59 | 480.93 |
| | | Amps | 4.81 | 4.80 | 4.79 | 4.84 | 5.45 | 5.44 | 5.43 | 5.48 | 6.17 | 6.16 | 6.15 | 6.20 | 6.95 | 6.94 | 6.93 | 6.98 | 7.82 | 7.81 | 7.80 | 7.85 | 8.84 | 8.83 | 8.82 | 8.87 |
| | | Power | 1,236 | 1,235 | 1,233 | 1,244 | 1,385 | 1,383 | 1,381 | 1,392 | 1,550 | 1,549 | 1,546 | 1,558 | 1,729 | 1,728 | 1,725 | 1,737 | 1,929 | 1,928 | 1,925 | 1,937 | 2,164 | 2,163 | 2,160 | 2,172 |
| | 800 | MBh | 23,220 | 23,542 | 24,223 | 25,263 | 23,016 | 23,338 | 24,019 | 25,059 | 22,421 | 22,743 | 23,424 | 24,464 | 21,397 | 21,719 | **22,400** | 23,440 | 20,146 | 20,468 | 21,149 | 22,188 | 19,004 | 19,325 | 20,006 | 21,046 |
| | | S/T | 1.00 | 0.86 | 0.72 | 0.57 | 1.00 | 0.86 | 0.73 | 0.58 | 1.00 | 0.89 | 0.75 | 0.61 | 1.00 | 1.00 | **0.77** | 0.63 | 1.00 | 1.00 | 0.79 | 0.65 | 1.00 | 1.00 | 0.85 | 0.70 |
| | | ΔT | 25.41 | 23.67 | 20.43 | 17.06 | 25.36 | 23.62 | 20.38 | 17.02 | 25.61 | 23.87 | 20.62 | 17.26 | 25.34 | 23.61 | **20.36** | 17.00 | 25.11 | 23.37 | 20.13 | 16.77 | 26.20 | 24.46 | 21.22 | 17.86 |
| | | Pr Suc | 128.45 | 130.01 | 133.22 | 138.58 | 136.12 | 137.68 | 140.88 | 146.25 | 142.83 | 144.39 | 147.60 | 152.97 | 148.51 | 150.07 | **153.28** | 158.64 | 154.08 | 155.64 | 158.85 | 164.21 | 161.06 | 162.62 | 165.82 | 171.19 |
| | | Pr Dis | 251.84 | 252.92 | 254.67 | 259.01 | 291.13 | 292.21 | 293.97 | 298.31 | 332.30 | 333.38 | 335.14 | 339.48 | 376.64 | 377.72 | **379.47** | 383.81 | 424.43 | 425.51 | 427.26 | 431.61 | 475.44 | 476.52 | 478.27 | 482.61 |
| | | Amps | 4.83 | 4.83 | 4.82 | 4.86 | 5.48 | 5.47 | 5.46 | 5.51 | 6.20 | 6.19 | 6.18 | 6.23 | 6.97 | 6.97 | **6.96** | 7.01 | 7.84 | 7.84 | 7.83 | 7.88 | 8.86 | 8.86 | 8.85 | 8.90 |
| | | Power | 1,242 | 1,241 | 1,239 | 1,250 | 1,391 | 1,389 | 1,387 | 1,398 | 1,556 | 1,555 | 1,552 | 1,564 | 1,735 | 1,734 | **1,731** | 1,743 | 1,935 | 1,934 | 1,931 | 1,943 | 2,170 | 2,169 | 2,166 | 2,178 |
| | 880 | MBh | 23,502 | 23,824 | 24,505 | 25,545 | 23,298 | 23,620 | 24,301 | 25,341 | 22,703 | 23,025 | 23,706 | 24,746 | 21,679 | 22,001 | 22,682 | 23,722 | 20,428 | 20,750 | 21,431 | 22,471 | 19,286 | 19,608 | 20,288 | 21,328 |
| | | S/T | 1.00 | 0.89 | 0.75 | 0.60 | 1.00 | 0.89 | 0.76 | 0.61 | 1.00 | 1.00 | 0.78 | 0.64 | 1.00 | 1.00 | 0.80 | 0.66 | 1.00 | 1.00 | 0.82 | 0.68 | 1.00 | 1.00 | 1.00 | 0.73 |
| | | ΔT | 24.69 | 22.95 | 19.71 | 16.35 | 24.64 | 22.91 | 19.66 | 16.30 | 24.89 | 23.15 | 19.91 | 16.54 | 24.63 | 22.89 | 19.64 | 16.28 | 24.39 | 22.66 | 19.41 | 16.05 | 25.48 | 23.74 | 20.50 | 17.14 |
| | | Pr Suc | 130.07 | 131.63 | 134.84 | 140.20 | 137.74 | 139.30 | 142.51 | 147.87 | 144.45 | 146.01 | 149.22 | 154.59 | 150.13 | 151.69 | 154.90 | 160.26 | 155.70 | 157.26 | 160.47 | 165.84 | 162.68 | 164.24 | 167.45 | 172.81 |
| | | Pr Dis | 253.48 | 254.56 | 256.31 | 260.65 | 292.77 | 293.86 | 295.61 | 299.95 | 333.95 | 335.03 | 336.78 | 341.12 | 378.28 | 379.36 | 381.11 | 385.45 | 426.07 | 427.15 | 428.91 | 433.25 | 477.08 | 478.16 | 479.91 | 484.25 |
| | | Amps | 4.85 | 4.85 | 4.84 | 4.89 | 5.50 | 5.49 | 5.48 | 5.53 | 6.22 | 6.21 | 6.20 | 6.25 | 7.00 | 6.99 | 6.98 | 7.03 | 7.87 | 7.86 | 7.85 | 7.90 | 8.89 | 8.88 | 8.87 | 8.92 |
| | | Power | 1,248 | 1,246 | 1,244 | 1,255 | 1,396 | 1,395 | 1,392 | 1,403 | 1,561 | 1,560 | 1,558 | 1,569 | 1,740 | 1,739 | 1,737 | 1,748 | 1,940 | 1,939 | 1,937 | 1,948 | 2,175 | 2,174 | 2,171 | 2,183 |
| 85 | 720 | MBh | 23,360 | 23,682 | 24,363 | 25,403 | 23,156 | 23,478 | 24,159 | 25,199 | 22,561 | 22,883 | 23,564 | 24,604 | 21,538 | 21,859 | 22,540 | 23,580 | 20,286 | 20,608 | 21,289 | 22,329 | 19,144 | 19,466 | 20,147 | 21,187 |
| | | S/T | 1.00 | 0.91 | 0.78 | 0.63 | 1.00 | 1.00 | 0.78 | 0.64 | 1.00 | 1.00 | 0.81 | 0.66 | 1.00 | 1.00 | 0.83 | 0.68 | 1.00 | 1.00 | 1.00 | 0.71 | 1.00 | 1.00 | 1.00 | 0.76 |
| | | ΔT | 29.64 | 27.91 | 24.66 | 21.30 | 29.60 | 27.86 | 24.61 | 21.25 | 29.84 | 28.10 | 24.86 | 21.50 | 29.58 | 27.84 | 24.60 | 21.23 | 29.35 | 27.61 | 24.36 | 21.00 | 30.43 | 28.70 | 25.45 | 22.09 |
| | | Pr Suc | 128.85 | 130.40 | 133.61 | 138.98 | 136.51 | 138.07 | 141.28 | 146.65 | 143.23 | 144.79 | 147.99 | 153.36 | 148.91 | 150.46 | 153.67 | 159.04 | 154.48 | 156.03 | 159.24 | 164.61 | 161.45 | 163.01 | 166.22 | 171.59 |
| | | Pr Dis | 251.33 | 252.41 | 254.16 | 258.50 | 290.62 | 291.70 | 293.46 | 297.80 | 331.79 | 332.87 | 334.63 | 338.97 | 376.13 | 377.21 | 378.96 | 383.30 | 423.92 | 425.00 | 426.75 | 431.10 | 474.93 | 476.01 | 477.76 | 482.10 |
| | | Amps | 4.82 | 4.81 | 4.80 | 4.85 | 5.46 | 5.46 | 5.45 | 5.50 | 6.18 | 6.18 | 6.17 | 6.22 | 6.96 | 6.96 | 6.94 | 6.99 | 7.83 | 7.83 | 7.81 | 7.86 | 8.85 | 8.85 | 8.83 | 8.88 |
| | | Power | 1,239 | 1,238 | 1,235 | 1,247 | 1,387 | 1,386 | 1,384 | 1,395 | 1,553 | 1,552 | 1,549 | 1,560 | 1,732 | 1,731 | 1,728 | 1,740 | 1,932 | 1,931 | 1,928 | 1,940 | 2,167 | 2,166 | 2,163 | 2,174 |
| | 800 | MBh | 23,604 | 23,926 | 24,607 | 25,647 | 23,400 | 23,722 | 24,403 | 25,443 | 22,805 | 23,127 | 23,808 | 24,848 | 21,781 | 22,103 | 22,784 | 23,824 | 20,530 | 20,852 | 21,533 | 22,572 | 19,388 | 19,709 | 20,390 | 21,430 |
| | | S/T | 1.00 | 0.96 | 0.82 | 0.68 | 1.00 | 1.00 | 0.83 | 0.68 | 1.00 | 1.00 | 0.85 | 0.71 | 1.00 | 1.00 | 0.87 | 0.73 | 1.00 | 1.00 | 1.00 | 0.75 | 1.00 | 1.00 | 1.00 | 0.80 |
| | | ΔT | 28.82 | 27.08 | 23.84 | 20.48 | 28.77 | 27.04 | 23.79 | 20.43 | 29.02 | 27.28 | 24.03 | 20.67 | 28.76 | 27.02 | 23.77 | 20.41 | 28.52 | 26.79 | 23.54 | 20.18 | 29.61 | 27.87 | 24.63 | 21.27 |
| | | Pr Suc | 130.34 | 131.90 | 135.11 | 140.47 | 138.01 | 139.56 | 142.77 | 148.14 | 144.72 | 146.28 | 149.49 | 154.85 | 150.40 | 151.96 | 155.16 | 160.53 | 155.97 | 157.53 | 160.74 | 166.10 | 162.95 | 164.50 | 167.71 | 173.08 |
| | | Pr Dis | 253.01 | 254.09 | 255.84 | 260.18 | 292.30 | 293.39 | 295.14 | 299.48 | 333.48 | 334.56 | 336.31 | 340.65 | 377.81 | 378.89 | 380.64 | 384.98 | 425.60 | 426.68 | 428.44 | 432.78 | 476.61 | 477.69 | 479.44 | 483.78 |
| | | Amps | 4.84 | 4.84 | 4.83 | 4.88 | 5.49 | 5.48 | 5.47 | 5.52 | 6.21 | 6.20 | 6.19 | 6.24 | 6.99 | 6.98 | 6.97 | 7.02 | 7.86 | 7.85 | 7.84 | 7.89 | 8.88 | 8.87 | 8.86 | 8.91 |
| | | Power | 1,245 | 1,244 | 1,241 | 1,253 | 1,393 | 1,392 | 1,390 | 1,401 | 1,559 | 1,558 | 1,555 | 1,566 | 1,738 | 1,737 | 1,734 | 1,746 | 1,938 | 1,937 | 1,934 | 1,946 | 2,173 | 2,172 | 2,169 | 2,180 |
| | 880 | MBh | 23,886 | 24,208 | 24,889 | 25,929 | 23,682 | 24,004 | 24,685 | 25,725 | 23,087 | 23,409 | 24,090 | 25,130 | 22,063 | 22,385 | 23,066 | 24,106 | 20,812 | 21,134 | 21,815 | 22,855 | 19,670 | 19,992 | 20,672 | 21,712 |
| | | S/T | 1.00 | 0.99 | 0.85 | 0.71 | 1.00 | 1.00 | 0.86 | 0.71 | 1.00 | 1.00 | 0.88 | 0.74 | 1.00 | 1.00 | 0.90 | 0.76 | 1.00 | 1.00 | 1.00 | 0.78 | 1.00 | 1.00 | 1.00 | 0.83 |
| | | ΔT | 28.10 | 26.37 | 23.12 | 19.76 | 28.06 | 26.32 | 23.07 | 19.71 | 28.30 | 26.56 | 23.32 | 19.96 | 28.04 | 26.30 | 23.06 | 19.69 | 27.81 | 26.07 | 22.82 | 19.46 | 28.89 | 27.16 | 23.91 | 20.55 |
| | | Pr Suc | 131.96 | 133.52 | 136.73 | 142.09 | 139.63 | 141.19 | 144.39 | 149.76 | 146.34 | 147.90 | 151.11 | 156.48 | 152.02 | 153.58 | 156.79 | 162.15 | 157.59 | 159.15 | 162.36 | 167.72 | 164.57 | 166.13 | 169.33 | 174.70 |
| | | Pr Dis | 254.65 | 255.73 | 257.48 | 261.82 | 293.95 | 295.03 | 296.78 | 301.12 | 335.12 | 336.20 | 337.95 | 342.29 | 379.45 | 380.53 | 382.28 | 386.62 | 427.25 | 428.33 | 430.08 | 434.42 | 478.25 | 479.33 | 481.08 | 485.43 |
| | | Amps | 4.87 | 4.86 | 4.85 | 4.90 | 5.51 | 5.51 | 5.50 | 5.54 | 6.23 | 6.23 | 6.21 | 6.26 | 7.01 | 7.00 | 6.99 | 7.04 | 7.88 | 7.87 | 7.86 | 7.91 | 8.90 | 8.89 | 8.88 | 8.93 |
| | | Power | 1,250 | 1,249 | 1,247 | 1,258 | 1,399 | 1,397 | 1,395 | 1,406 | 1,564 | 1,563 | 1,560 | 1,572 | 1,743 | 1,742 | 1,739 | 1,751 | 1,943 | 1,942 | 1,940 | 1,951 | 2,178 | 2,177 | 2,174 | 2,186 |

IDB*: Entering Indoor Dry Bulb Temperature

High and low pressures are measured at the liquid and suction service valves.

Shaded area reflects AHRI conditions.

kW = Total system power

Amps = outdoor unit amps

| | | | Outdoor Ambient Temperature | | | | | | | | | | | | | | | | | | | | | | | |
|---|---|---|---|---|---|---|---|---|---|---|---|---|---|---|---|---|---|---|---|---|---|---|---|---|---|---|
| | | | 65 | | | | 75 | | | | 85 | | | | 95 | | | | 105 | | | | 115 | | | |
| | | | Entering Indoor Wet Bulb Temperature | | | | | | | | | | | | | | | | | | | | | | | |
| ID DB | Air | ID WB | 59 | 63 | 67 | 71 | 59 | 63 | 67 | 71 | 59 | 63 | 67 | 71 | 59 | 63 | 67 | 71 | 59 | 63 | 67 | 71 | 59 | 63 | 67 | 71 |
| 70 | 560 | MBh | 16,431 | 16,662 | 17,152 | --- | 16,284 | 16,516 | 17,005 | --- | 15,856 | 16,088 | 16,577 | --- | 15,120 | 15,352 | 15,841 | --- | 14,221 | 14,452 | 14,941 | --- | 13,399 | 13,631 | 14,120 | --- |
| | | S/T | 0.65 | 0.57 | 0.43 | --- | 0.66 | 0.58 | 0.43 | --- | 1.00 | 0.60 | 0.46 | --- | 1.00 | 0.62 | 0.48 | --- | 1.00 | 0.65 | 0.50 | --- | 1.00 | 1.00 | 0.56 | --- |
| | | ΔT | 17.89 | 16.21 | 13.08 | --- | 17.84 | 16.16 | 13.03 | --- | 18.08 | 16.40 | 13.27 | --- | 17.82 | 16.15 | 13.01 | --- | 17.60 | 15.92 | 12.79 | --- | 18.65 | 16.97 | 13.84 | --- |
| | | Pr Suc | 129.96 | 131.56 | 134.86 | --- | 137.84 | 139.44 | 142.74 | --- | 144.74 | 146.34 | 149.64 | --- | 150.58 | 152.18 | 155.48 | --- | 156.31 | 157.91 | 161.20 | --- | 163.48 | 165.08 | 168.38 | --- |
| | | Pr Dis | 238.55 | 239.59 | 241.26 | --- | 276.12 | 277.15 | 278.83 | --- | 315.48 | 316.51 | 318.19 | --- | 357.86 | 358.89 | 360.57 | --- | 403.56 | 404.59 | 406.26 | --- | 452.32 | 453.35 | 455.03 | --- |
| | | Amps | 3.02 | 3.02 | 3.01 | --- | 3.43 | 3.43 | 3.42 | --- | 3.88 | 3.88 | 3.87 | --- | 4.37 | 4.37 | 4.36 | --- | 4.92 | 4.92 | 4.91 | --- | 5.56 | 5.56 | 5.55 | --- |
| | | Power | 778 | 777 | 776 | --- | 871 | 870 | 869 | --- | 975 | 974 | 973 | --- | 1,088 | 1,087 | 1,085 | --- | 1,214 | 1,213 | 1,211 | --- | 1,361 | 1,361 | 1,359 | --- |
| | 620 | MBh | 16,601 | 16,832 | 17,322 | --- | 16,454 | 16,686 | 17,175 | --- | 16,026 | 16,258 | 16,747 | --- | 15,290 | 15,522 | 16,011 | --- | 14,390 | 14,622 | 15,111 | --- | 13,569 | 13,801 | 14,290 | --- |
| | | S/T | 0.69 | 0.62 | 0.47 | --- | 0.70 | 0.62 | 0.48 | --- | 1.00 | 0.65 | 0.51 | --- | 1.00 | 0.67 | 0.53 | --- | 1.00 | 0.69 | 0.55 | --- | 1.00 | 1.00 | 0.60 | --- |
| | | ΔT | 17.12 | 15.44 | 12.31 | --- | 17.07 | 15.40 | 12.27 | --- | 17.31 | 15.63 | 12.50 | --- | 17.06 | 15.38 | 12.25 | --- | 16.83 | 15.16 | 12.02 | --- | 17.88 | 16.21 | 13.07 | --- |
| | | Pr Suc | 131.44 | 133.05 | 136.34 | --- | 139.33 | 140.93 | 144.23 | --- | 146.23 | 147.83 | 151.13 | --- | 152.07 | 153.67 | 156.96 | --- | 157.79 | 159.39 | 162.69 | --- | 164.96 | 166.57 | 169.86 | --- |
| | | Pr Dis | 240.11 | 241.14 | 242.81 | --- | 277.67 | 278.71 | 280.38 | --- | 317.03 | 318.07 | 319.74 | --- | 359.41 | 360.45 | 362.12 | --- | 405.11 | 406.14 | 407.82 | --- | 453.87 | 454.91 | 456.58 | --- |
| | | Amps | 3.04 | 3.04 | 3.03 | --- | 3.45 | 3.44 | 3.43 | --- | 3.90 | 3.89 | 3.89 | --- | 4.39 | 4.38 | 4.38 | --- | 4.93 | 4.93 | 4.92 | --- | 5.58 | 5.57 | 5.57 | --- |
| | | Power | 782 | 781 | 779 | --- | 875 | 874 | 872 | --- | 979 | 978 | 977 | --- | 1,091 | 1,091 | 1,089 | --- | 1,217 | 1,217 | 1,215 | --- | 1,365 | 1,364 | 1,363 | --- |
| | 680 | MBh | 16,797 | 17,028 | 17,518 | --- | 16,650 | 16,881 | 17,371 | --- | 16,222 | 16,454 | 16,943 | --- | 15,486 | 15,717 | 16,207 | --- | 14,586 | 14,818 | 15,307 | --- | 13,765 | 13,996 | 14,486 | --- |
| | | S/T | 0.72 | 0.64 | 0.50 | --- | 0.73 | 0.65 | 0.51 | --- | 1.00 | 0.68 | 0.54 | --- | 1.00 | 0.70 | 0.56 | --- | 1.00 | 0.72 | 0.58 | --- | 1.00 | 1.00 | 0.63 | --- |
| | | ΔT | 16.45 | 14.77 | 11.64 | --- | 16.40 | 14.73 | 11.60 | --- | 16.64 | 14.96 | 11.83 | --- | 16.39 | 14.71 | 11.58 | --- | 16.16 | 14.49 | 11.35 | --- | 17.21 | 15.54 | 12.40 | --- |
| | | Pr Suc | 133.06 | 134.66 | 137.95 | --- | 140.94 | 142.54 | 145.84 | --- | 147.84 | 149.44 | 152.74 | --- | 153.68 | 155.28 | 158.57 | --- | 159.40 | 161.00 | 164.30 | --- | 166.58 | 168.18 | 171.47 | --- |
| | | Pr Dis | 241.62 | 242.66 | 244.33 | --- | 279.19 | 280.23 | 281.90 | --- | 318.55 | 319.58 | 321.26 | --- | 360.93 | 361.97 | 363.64 | --- | 406.63 | 407.66 | 409.33 | --- | 455.39 | 456.42 | 458.10 | --- |
| | | Amps | 3.05 | 3.05 | 3.04 | --- | 3.46 | 3.46 | 3.45 | --- | 3.91 | 3.91 | 3.90 | --- | 4.40 | 4.40 | 4.39 | --- | 4.95 | 4.95 | 4.94 | --- | 5.59 | 5.59 | 5.58 | --- |
| | | Power | 785 | 784 | 782 | --- | 878 | 877 | 876 | --- | 982 | 981 | 980 | --- | 1,095 | 1,094 | 1,092 | --- | 1,221 | 1,220 | 1,218 | --- | 1,368 | 1,367 | 1,366 | --- |
| 75 | 560 | MBh | 16,440 | 16,672 | 17,161 | 17,909 | 16,294 | 16,525 | 17,015 | 17,762 | 15,866 | 16,097 | 16,587 | 17,335 | 15,130 | 15,361 | 15,851 | 16,598 | 14,230 | 14,462 | 14,951 | 15,699 | 13,409 | 13,640 | 14,130 | 14,877 |
| | | S/T | 0.78 | 0.70 | 0.56 | 0.41 | 1.00 | 0.71 | 0.57 | 0.42 | 1.00 | 0.74 | 0.60 | 0.45 | 1.00 | 0.76 | 0.62 | 0.47 | 1.00 | 1.00 | 0.64 | 0.49 | 1.00 | 1.00 | 0.69 | 0.54 |
| | | ΔT | 21.57 | 19.90 | 16.77 | 13.52 | 21.53 | 19.85 | 16.72 | 13.48 | 21.76 | 20.09 | 16.95 | 13.71 | 21.51 | 19.83 | 16.70 | 13.46 | 21.29 | 19.61 | 16.48 | 13.23 | 22.34 | 20.66 | 17.53 | 14.28 |
| | | Pr Suc | 129.99 | 131.59 | 134.89 | 140.40 | 137.87 | 139.47 | 142.77 | 148.29 | 144.77 | 146.37 | 149.67 | 155.19 | 150.61 | 152.21 | 155.51 | 161.02 | 156.34 | 157.94 | 161.24 | 166.75 | 163.51 | 165.11 | 168.41 | 173.92 |
| | | Pr Dis | 238.76 | 239.80 | 241.47 | 245.62 | 276.33 | 277.36 | 279.04 | 283.19 | 315.69 | 316.72 | 318.40 | 322.55 | 358.07 | 359.10 | 360.78 | 364.93 | 403.77 | 404.80 | 406.47 | 410.62 | 452.53 | 453.56 | 455.24 | 459.39 |
| | | Amps | 3.02 | 3.02 | 3.01 | 3.04 | 3.43 | 3.42 | 3.42 | 3.45 | 3.88 | 3.88 | 3.87 | 3.90 | 4.37 | 4.37 | 4.36 | 4.39 | 4.92 | 4.91 | 4.91 | 4.94 | 5.56 | 5.55 | 5.55 | 5.58 |
| | | Power | 777 | 777 | 775 | 782 | 870 | 870 | 868 | 875 | 975 | 974 | 972 | 979 | 1,087 | 1,086 | 1,085 | 1,092 | 1,213 | 1,212 | 1,211 | 1,218 | 1,361 | 1,360 | 1,358 | 1,366 |
| | 620 | MBh | 16,610 | 16,842 | 17,331 | 18,079 | 16,464 | 16,695 | 17,185 | 17,932 | 16,036 | 16,267 | 16,757 | 17,504 | 15,300 | 15,531 | 16,021 | 16,768 | 14,400 | 14,631 | 15,121 | 15,869 | 13,579 | 13,810 | 14,300 | 15,047 |
| | | S/T | 0.83 | 0.75 | 0.61 | 0.46 | 1.00 | 0.76 | 0.61 | 0.47 | 1.00 | 0.78 | 0.64 | 0.49 | 1.00 | 0.80 | 0.66 | 0.51 | 1.00 | 1.00 | 0.68 | 0.54 | 1.00 | 1.00 | 0.74 | 0.59 |
| | | ΔT | 20.81 | 19.13 | 16.00 | 12.76 | 20.76 | 19.08 | 15.95 | 12.71 | 21.00 | 19.32 | 16.19 | 12.95 | 20.74 | 19.07 | 15.94 | 12.69 | 20.52 | 18.84 | 15.71 | 12.47 | 21.57 | 19.89 | 16.76 | 13.52 |
| | | Pr Suc | 131.48 | 133.08 | 136.37 | 141.89 | 139.36 | 140.96 | 144.26 | 149.77 | 146.26 | 147.86 | 151.16 | 156.68 | 152.10 | 153.70 | 156.99 | 162.51 | 157.82 | 159.42 | 162.72 | 168.24 | 165.00 | 166.60 | 169.89 | 175.41 |
| | | Pr Dis | 240.32 | 241.35 | 243.02 | 247.17 | 277.89 | 278.92 | 280.59 | 284.74 | 317.24 | 318.28 | 319.95 | 324.10 | 359.63 | 360.66 | 362.33 | 366.48 | 405.32 | 406.35 | 408.03 | 412.18 | 454.08 | 455.12 | 456.79 | 460.94 |
| | | Amps | 3.04 | 3.03 | 3.03 | 3.06 | 3.44 | 3.44 | 3.43 | 3.46 | 3.89 | 3.89 | 3.88 | 3.92 | 4.38 | 4.38 | 4.37 | 4.41 | 4.93 | 4.93 | 4.92 | 4.95 | 5.57 | 5.57 | 5.56 | 5.59 |
| | | Power | 781 | 780 | 779 | 786 | 874 | 873 | 872 | 879 | 978 | 978 | 976 | 983 | 1,091 | 1,090 | 1,089 | 1,096 | 1,217 | 1,216 | 1,214 | 1,222 | 1,364 | 1,364 | 1,362 | 1,369 |
| | 680 | MBh | 16,806 | 17,038 | 17,527 | 18,275 | 16,660 | 16,891 | 17,381 | 18,128 | 16,232 | 16,463 | 16,953 | 17,700 | 15,496 | 15,727 | 16,217 | 16,964 | 14,596 | 14,827 | 15,317 | 16,065 | 13,775 | 14,006 | 14,496 | 15,243 |
| | | S/T | 0.86 | 0.78 | 0.64 | 0.49 | 1.00 | 0.79 | 0.64 | 0.50 | 1.00 | 0.81 | 0.67 | 0.52 | 1.00 | 1.00 | 0.69 | 0.54 | 1.00 | 1.00 | 0.71 | 0.56 | 1.00 | 1.00 | 0.77 | 0.62 |
| | | ΔT | 20.14 | 18.46 | 15.33 | 12.08 | 20.09 | 18.41 | 15.28 | 12.04 | 20.33 | 18.65 | 15.52 | 12.27 | 20.07 | 18.40 | 15.27 | 12.02 | 19.85 | 18.17 | 15.04 | 11.80 | 20.90 | 19.22 | 16.09 | 12.85 |
| | | Pr Suc | 133.09 | 134.69 | 137.99 | 143.50 | 140.97 | 142.57 | 145.87 | 151.38 | 147.87 | 149.47 | 152.77 | 158.29 | 153.71 | 155.31 | 158.61 | 164.12 | 159.43 | 161.03 | 164.33 | 169.85 | 166.61 | 168.21 | 171.51 | 177.02 |
| | | Pr Dis | 241.83 | 242.87 | 244.54 | 248.69 | 279.40 | 280.44 | 282.11 | 286.26 | 318.76 | 319.80 | 321.47 | 325.62 | 361.14 | 362.18 | 363.85 | 368.00 | 406.84 | 407.87 | 409.54 | 413.69 | 455.60 | 456.63 | 458.31 | 462.46 |
| | | Amps | 3.05 | 3.05 | 3.04 | 3.07 | 3.46 | 3.45 | 3.45 | 3.48 | 3.91 | 3.91 | 3.90 | 3.93 | 4.40 | 4.40 | 4.39 | 4.42 | 4.95 | 4.94 | 4.94 | 4.97 | 5.59 | 5.58 | 5.58 | 5.61 |
| | | Power | 784 | 783 | 782 | 789 | 877 | 877 | 875 | 882 | 981 | 981 | 979 | 986 | 1,094 | 1,093 | 1,092 | 1,099 | 1,220 | 1,219 | 1,218 | 1,225 | 1,368 | 1,367 | 1,365 | 1,372 |

IDB*: Entering Indoor Dry Bulb Temperature

Shaded area reflects ACCA (TVA) conditions.

kW = Total system power

High and low pressures are measured at the liquid and suction service valves.

Amps = outdoor unit amps

## Expanded Cooling Data — DZ18VC0241A* / DV37PECC14A* (Low Stage)

| | | | Outdoor Ambient Temperature | | | | | | | | | | | | | | | | | | | | | | | |
|---|---|---|---|---|---|---|---|---|---|---|---|---|---|---|---|---|---|---|---|---|---|---|---|---|---|---|
| | | | 65 | | | | 75 | | | | 85 | | | | 95 | | | | 105 | | | | 115 | | | |
| | | | Entering Indoor Wet Bulb Temperature | | | | | | | | | | | | | | | | | | | | | | | |
| ID DB | Air | ID WB | 59 | 63 | 67 | 71 | 59 | 63 | 67 | 71 | 59 | 63 | 67 | 71 | 59 | 63 | 67 | 71 | 59 | 63 | 67 | 71 | 59 | 63 | 67 | 71 |
| 80 | 560 | MBh | 16,525 | 16,757 | 17,246 | 17,994 | 16,379 | 16,610 | 17,100 | 17,847 | 15,951 | 16,182 | 16,672 | 17,419 | 15,215 | 15,446 | 15,936 | 16,683 | 14,315 | 14,546 | 15,036 | 15,784 | 13,494 | 13,725 | 14,215 | 14,962 |
| | | S/T | 1.00 | 0.83 | 0.69 | 0.54 | 1.00 | 0.84 | 0.70 | 0.55 | 1.00 | 1.00 | 0.73 | 0.58 | 1.00 | 1.00 | 0.75 | 0.60 | 1.00 | 1.00 | 0.77 | 0.62 | 1.00 | 1.00 | 1.00 | 0.67 |
| | | ΔT | 25.29 | 23.61 | 20.48 | 17.23 | 25.24 | 23.56 | 20.43 | 17.19 | 25.48 | 23.80 | 20.67 | 17.42 | 25.22 | 23.55 | 20.41 | 17.17 | 25.00 | 23.32 | 20.19 | 16.95 | 26.05 | 24.37 | 21.24 | 18.00 |
| | | Pr Suc | 130.56 | 132.16 | 135.46 | 140.98 | 138.44 | 140.04 | 143.34 | 148.86 | 145.35 | 146.95 | 150.24 | 155.76 | 151.18 | 152.78 | 156.08 | 161.60 | 156.91 | 158.51 | 161.81 | 167.32 | 164.08 | 165.68 | 168.98 | 174.50 |
| | | Pr Dis | 239.20 | 240.23 | 241.91 | 246.06 | 276.77 | 277.80 | 279.48 | 283.63 | 316.13 | 317.16 | 318.84 | 322.99 | 358.51 | 359.54 | 361.22 | 365.37 | 404.20 | 405.24 | 406.91 | 411.06 | 452.97 | 454.00 | 455.67 | 459.82 |
| | | Amps | 3.02 | 3.02 | 3.01 | 3.04 | 3.43 | 3.43 | 3.42 | 3.45 | 3.88 | 3.88 | 3.87 | 3.90 | 4.37 | 4.37 | 4.36 | 4.39 | 4.92 | 4.91 | 4.91 | 4.94 | 5.56 | 5.56 | 5.55 | 5.58 |
| | | Power | 778 | 777 | 775 | 783 | 871 | 870 | 869 | 876 | 975 | 974 | 973 | 980 | 1,088 | 1,087 | 1,085 | 1,093 | 1,214 | 1,213 | 1,211 | 1,218 | 1,361 | 1,360 | 1,359 | 1,366 |
| | 620 | MBh | 16,695 | 16,927 | 17,416 | 18,164 | 16,549 | 16,780 | 17,270 | 18,017 | 16,121 | 16,352 | 16,842 | 17,589 | 15,385 | 15,616 | **16,106** | 16,853 | 14,485 | 14,716 | 15,206 | 15,954 | 13,664 | 13,895 | 14,385 | 15,132 |
| | | S/T | 1.00 | 0.88 | 0.74 | 0.59 | 1.00 | 0.89 | 0.75 | 0.60 | 1.00 | 1.00 | 0.77 | 0.62 | 1.00 | 1.00 | **0.79** | 0.64 | 1.00 | 1.00 | 0.82 | 0.67 | 1.00 | 1.00 | 1.00 | 0.72 |
| | | ΔT | 24.52 | 22.84 | 19.71 | 16.47 | 24.47 | 22.80 | 19.67 | 16.42 | 24.71 | 23.03 | 19.90 | 16.66 | 24.46 | 22.78 | **19.65** | 16.40 | 24.23 | 22.56 | 19.42 | 16.18 | 25.28 | 23.61 | 20.47 | 17.23 |
| | | Pr Suc | 132.05 | 133.65 | 136.95 | 142.46 | 139.93 | 141.53 | 144.83 | 150.35 | 146.83 | 148.43 | 151.73 | 157.25 | 152.67 | 154.27 | **157.57** | 163.08 | 158.40 | 160.00 | 163.30 | 168.81 | 165.57 | 167.17 | 170.47 | 175.98 |
| | | Pr Dis | 240.75 | 241.79 | 243.46 | 247.61 | 278.32 | 279.36 | 281.03 | 285.18 | 317.68 | 318.72 | 320.39 | 324.54 | 360.06 | 361.10 | **362.77** | 366.92 | 405.76 | 406.79 | 408.46 | 412.61 | 454.52 | 455.55 | 457.23 | 461.38 |
| | | Amps | 3.04 | 3.04 | 3.03 | 3.06 | 3.44 | 3.44 | 3.43 | 3.47 | 3.90 | 3.89 | 3.89 | 3.92 | 4.39 | 4.38 | **4.38** | 4.41 | 4.93 | 4.93 | 4.92 | 4.95 | 5.58 | 5.57 | 5.57 | 5.60 |
| | | Power | 781 | 781 | 779 | 786 | 875 | 874 | 872 | 879 | 979 | 978 | 976 | 984 | 1,091 | 1,091 | **1,089** | 1,096 | 1,217 | 1,216 | 1,215 | 1,222 | 1,365 | 1,364 | 1,363 | 1,370 |
| | 680 | MBh | 16,891 | 17,123 | 17,612 | 18,360 | 16,744 | 16,976 | 17,465 | 18,213 | 16,317 | 16,548 | 17,038 | 17,785 | 15,580 | 15,812 | 16,301 | 17,049 | 14,681 | 14,912 | 15,402 | 16,149 | 13,859 | 14,091 | 14,580 | 15,328 |
| | | S/T | 1.00 | 0.91 | 0.77 | 0.62 | 1.00 | 0.92 | 0.78 | 0.63 | 1.00 | 1.00 | 0.80 | 0.65 | 1.00 | 1.00 | 0.82 | 0.67 | 1.00 | 1.00 | 0.84 | 0.70 | 1.00 | 1.00 | 1.00 | 0.75 |
| | | ΔT | 23.85 | 22.17 | 19.04 | 15.80 | 23.80 | 22.13 | 19.00 | 15.75 | 24.04 | 22.36 | 19.23 | 15.99 | 23.79 | 22.11 | 18.98 | 15.73 | 23.56 | 21.88 | 18.75 | 15.51 | 24.61 | 22.93 | 19.80 | 16.56 |
| | | Pr Suc | 133.66 | 135.26 | 138.56 | 144.07 | 141.54 | 143.14 | 146.44 | 151.96 | 148.44 | 150.04 | 153.34 | 158.86 | 154.28 | 155.88 | 159.18 | 164.69 | 160.01 | 161.61 | 164.91 | 170.42 | 167.18 | 168.78 | 172.08 | 177.59 |
| | | Pr Dis | 242.27 | 243.31 | 244.98 | 249.13 | 279.84 | 280.87 | 282.55 | 286.70 | 319.20 | 320.23 | 321.91 | 326.06 | 361.58 | 362.61 | 364.29 | 368.44 | 407.28 | 408.31 | 409.98 | 414.13 | 456.04 | 457.07 | 458.75 | 462.90 |
| | | Amps | 3.05 | 3.05 | 3.04 | 3.07 | 3.46 | 3.46 | 3.45 | 3.48 | 3.91 | 3.91 | 3.90 | 3.93 | 4.40 | 4.40 | 4.39 | 4.42 | 4.95 | 4.94 | 4.94 | 4.97 | 5.59 | 5.59 | 5.58 | 5.61 |
| | | Power | 785 | 784 | 782 | 789 | 878 | 877 | 876 | 883 | 982 | 981 | 980 | 987 | 1,095 | 1,094 | 1,092 | 1,099 | 1,220 | 1,220 | 1,218 | 1,225 | 1,368 | 1,367 | 1,366 | 1,373 |
| 85 | 560 | MBh | 16,801 | 17,033 | 17,522 | 18,270 | 16,655 | 16,886 | 17,376 | 18,123 | 16,227 | 16,458 | 16,948 | 17,696 | 15,491 | 15,722 | 16,212 | 16,959 | 14,591 | 14,823 | 15,312 | 16,060 | 13,770 | 14,001 | 14,491 | 15,238 |
| | | S/T | 1.00 | 0.94 | 0.80 | 0.65 | 1.00 | 1.00 | 0.81 | 0.66 | 1.00 | 1.00 | 0.83 | 0.68 | 1.00 | 1.00 | 0.85 | 0.70 | 1.00 | 1.00 | 1.00 | 0.73 | 1.00 | 1.00 | 1.00 | 0.78 |
| | | ΔT | 28.58 | 26.90 | 23.77 | 20.53 | 28.53 | 26.86 | 23.72 | 20.48 | 28.77 | 27.09 | 23.96 | 20.72 | 28.51 | 26.84 | 23.71 | 20.46 | 28.29 | 26.61 | 23.48 | 20.24 | 29.34 | 27.66 | 24.53 | 21.29 |
| | | Pr Suc | 132.50 | 134.10 | 137.40 | 142.92 | 140.38 | 141.98 | 145.28 | 150.80 | 147.29 | 148.89 | 152.19 | 157.70 | 153.12 | 154.72 | 158.02 | 163.54 | 158.85 | 160.45 | 163.75 | 169.27 | 166.02 | 167.62 | 170.92 | 176.44 |
| | | Pr Dis | 240.32 | 241.35 | 243.03 | 247.18 | 277.89 | 278.92 | 280.60 | 284.75 | 317.25 | 318.28 | 319.96 | 324.11 | 359.63 | 360.66 | 362.34 | 366.49 | 405.32 | 406.36 | 408.03 | 412.18 | 454.09 | 455.12 | 456.79 | 460.94 |
| | | Amps | 3.03 | 3.03 | 3.02 | 3.05 | 3.44 | 3.43 | 3.43 | 3.46 | 3.89 | 3.89 | 3.88 | 3.91 | 4.38 | 4.38 | 4.37 | 4.40 | 4.93 | 4.92 | 4.92 | 4.95 | 5.57 | 5.56 | 5.56 | 5.59 |
| | | Power | 780 | 779 | 777 | 784 | 873 | 872 | 870 | 878 | 977 | 976 | 975 | 982 | 1,089 | 1,089 | 1,087 | 1,094 | 1,215 | 1,215 | 1,213 | 1,220 | 1,363 | 1,362 | 1,361 | 1,368 |
| | 620 | MBh | 16,971 | 17,203 | 17,692 | 18,440 | 16,825 | 17,056 | 17,546 | 18,293 | 16,397 | 16,628 | 17,118 | 17,865 | 15,661 | 15,892 | 16,382 | 17,129 | 14,761 | 14,992 | 15,482 | 16,230 | 13,940 | 14,171 | 14,661 | 15,408 |
| | | S/T | 1.00 | 1.00 | 0.84 | 0.70 | 1.00 | 1.00 | 0.85 | 0.70 | 1.00 | 1.00 | 0.88 | 0.73 | 1.00 | 1.00 | 1.00 | 0.75 | 1.00 | 1.00 | 1.00 | 0.77 | 1.00 | 1.00 | 1.00 | 0.83 |
| | | ΔT | 27.81 | 26.14 | 23.00 | 19.76 | 27.77 | 26.09 | 22.96 | 19.71 | 28.00 | 26.32 | 23.19 | 19.95 | 27.75 | 26.07 | 22.94 | 19.70 | 27.52 | 25.85 | 22.72 | 19.47 | 28.57 | 26.90 | 23.77 | 20.52 |
| | | Pr Suc | 133.99 | 135.59 | 138.89 | 144.41 | 141.87 | 143.47 | 146.77 | 152.29 | 148.77 | 150.38 | 153.67 | 159.19 | 154.61 | 156.21 | 159.51 | 165.03 | 160.34 | 161.94 | 165.24 | 170.75 | 167.51 | 169.11 | 172.41 | 177.93 |
| | | Pr Dis | 241.87 | 242.91 | 244.58 | 248.73 | 279.44 | 280.48 | 282.15 | 286.30 | 318.80 | 319.83 | 321.51 | 325.66 | 361.18 | 362.22 | 363.89 | 368.04 | 406.88 | 407.91 | 409.58 | 413.73 | 455.64 | 456.67 | 458.35 | 462.50 |
| | | Amps | 3.05 | 3.04 | 3.04 | 3.07 | 3.45 | 3.45 | 3.44 | 3.47 | 3.90 | 3.90 | 3.89 | 3.93 | 4.39 | 4.39 | 4.38 | 4.42 | 4.94 | 4.94 | 4.93 | 4.96 | 5.58 | 5.58 | 5.57 | 5.60 |
| | | Power | 783 | 782 | 781 | 788 | 876 | 876 | 874 | 881 | 981 | 980 | 978 | 985 | 1,093 | 1,092 | 1,091 | 1,098 | 1,219 | 1,218 | 1,217 | 1,224 | 1,367 | 1,366 | 1,364 | 1,371 |
| | 680 | MBh | 17,167 | 17,399 | 17,888 | 18,636 | 17,021 | 17,252 | 17,742 | 18,489 | 16,593 | 16,824 | 17,314 | 18,061 | 15,857 | 16,088 | 16,577 | 17,325 | 14,957 | 15,188 | 15,678 | 16,426 | 14,136 | 14,367 | 14,856 | 15,604 |
| | | S/T | 1.00 | 1.00 | 0.87 | 0.73 | 1.00 | 1.00 | 0.88 | 0.73 | 1.00 | 1.00 | 0.91 | 0.76 | 1.00 | 1.00 | 1.00 | 0.78 | 1.00 | 1.00 | 1.00 | 0.80 | 1.00 | 1.00 | 1.00 | 0.85 |
| | | ΔT | 27.14 | 25.46 | 22.33 | 19.09 | 27.10 | 25.42 | 22.29 | 19.04 | 27.33 | 25.65 | 22.52 | 19.28 | 27.08 | 25.40 | 22.27 | 19.03 | 26.85 | 25.18 | 22.05 | 18.80 | 27.90 | 26.23 | 23.10 | 19.85 |
| | | Pr Suc | 135.60 | 137.20 | 140.50 | 146.02 | 143.48 | 145.08 | 148.38 | 153.90 | 150.39 | 151.99 | 155.28 | 160.80 | 156.22 | 157.82 | 161.12 | 166.64 | 161.95 | 163.55 | 166.85 | 172.36 | 169.12 | 170.72 | 174.02 | 179.54 |
| | | Pr Dis | 243.39 | 244.43 | 246.10 | 250.25 | 280.96 | 281.99 | 283.67 | 287.82 | 320.32 | 321.35 | 323.03 | 327.18 | 362.70 | 363.73 | 365.41 | 369.56 | 408.40 | 409.43 | 411.10 | 415.25 | 457.16 | 458.19 | 459.87 | 464.02 |
| | | Amps | 3.06 | 3.06 | 3.05 | 3.08 | 3.47 | 3.46 | 3.46 | 3.49 | 3.92 | 3.92 | 3.91 | 3.94 | 4.41 | 4.41 | 4.40 | 4.43 | 4.96 | 4.95 | 4.95 | 4.98 | 5.60 | 5.59 | 5.59 | 5.62 |
| | | Power | 786 | 786 | 784 | 791 | 880 | 879 | 877 | 884 | 984 | 983 | 981 | 989 | 1,096 | 1,096 | 1,094 | 1,101 | 1,222 | 1,221 | 1,220 | 1,227 | 1,370 | 1,369 | 1,368 | 1,375 |

IDB*: Entering Indoor Dry Bulb Temperature

High and low pressures are measured at the liquid and suction service valves.

Shaded area reflects AHRI conditions.

kW = Total system power

Amps = outdoor unit amps

# Expanded Cooling Data — DZ18VC0361A* / DV59PECD14A* (High Stage)

| | | | Outdoor Ambient Temperature | | | | | | | | | | | | | | | | | | | | | | | |
|---|---|---|---|---|---|---|---|---|---|---|---|---|---|---|---|---|---|---|---|---|---|---|---|---|---|---|
| | | | 65 | | | | 75 | | | | 85 | | | | 95 | | | | 105 | | | | 115 | | | |
| | | | Entering Indoor Wet Bulb Temperature | | | | | | | | | | | | | | | | | | | | | | | |
| ID DB | Air | ID WB | 59 | 63 | 67 | 71 | 59 | 63 | 67 | 71 | 59 | 63 | 67 | 71 | 59 | 63 | 67 | 71 | 59 | 63 | 67 | 71 | 59 | 63 | 67 | 71 |
| 70 | 1130 | MBh | 34,257 | 34,740 | 35,761 | --- | 33,951 | 34,434 | 35,455 | --- | 33,058 | 33,541 | 34,562 | --- | 31,523 | 32,005 | 33,027 | --- | 29,646 | 30,128 | 31,150 | --- | 27,932 | 28,415 | 29,436 | --- |
| | | S/T | 0.67 | 0.58 | 0.44 | --- | 0.67 | 0.59 | 0.44 | --- | 0.70 | 0.62 | 0.47 | --- | 1.00 | 0.64 | 0.49 | --- | 1.00 | 0.66 | 0.52 | --- | 1.00 | 0.72 | 0.57 | --- |
| | | ΔT | 18.39 | 16.67 | 13.46 | --- | 18.34 | 16.62 | 13.41 | --- | 18.58 | 16.87 | 13.66 | --- | 18.33 | 16.61 | 13.40 | --- | 18.10 | 16.38 | 13.17 | --- | 19.17 | 17.45 | 14.24 | --- |
| | | Pr Suc | 124.48 | 126.02 | 129.18 | --- | 132.04 | 133.57 | 136.74 | --- | 138.66 | 140.19 | 143.35 | --- | 144.25 | 145.79 | 148.95 | --- | 149.74 | 151.28 | 154.44 | --- | 156.62 | 158.15 | 161.31 | --- |
| | | Pr Dis | 274.24 | 275.43 | 277.35 | --- | 317.45 | 318.63 | 320.56 | --- | 362.71 | 363.90 | 365.83 | --- | 411.46 | 412.64 | 414.57 | --- | 464.01 | 465.20 | 467.12 | --- | 520.09 | 521.28 | 523.20 | --- |
| | | Amps | 7.90 | 7.89 | 7.87 | --- | 9.06 | 9.05 | 9.03 | --- | 10.34 | 10.33 | 10.31 | --- | 11.73 | 11.72 | 11.70 | --- | 13.29 | 13.28 | 13.26 | --- | 15.11 | 15.10 | 15.09 | --- |
| | | Power | 2,035 | 2,033 | 2,028 | --- | 2,300 | 2,298 | 2,293 | --- | 2,596 | 2,593 | 2,589 | --- | 2,916 | 2,914 | 2,909 | --- | 3,273 | 3,271 | 3,267 | --- | 3,693 | 3,691 | 3,687 | --- |
| | 1260 | MBh | 34,633 | 35,116 | 36,137 | --- | 34,327 | 34,810 | 35,831 | --- | 33,435 | 33,917 | 34,939 | --- | 31,899 | 32,382 | 33,403 | --- | 30,022 | 30,505 | 31,526 | --- | 28,308 | 28,791 | 29,812 | --- |
| | | S/T | 0.72 | 0.63 | 0.49 | --- | 0.72 | 0.64 | 0.50 | --- | 0.75 | 0.67 | 0.52 | --- | 1.00 | 0.69 | 0.54 | --- | 1.00 | 0.71 | 0.57 | --- | 1.00 | 0.77 | 0.62 | --- |
| | | ΔT | 17.55 | 15.83 | 12.62 | --- | 17.50 | 15.78 | 12.57 | --- | 17.74 | 16.02 | 12.81 | --- | 17.48 | 15.76 | 12.56 | --- | 17.25 | 15.54 | 12.33 | --- | 18.33 | 16.61 | 13.40 | --- |
| | | Pr Suc | 126.00 | 127.54 | 130.70 | --- | 133.56 | 135.09 | 138.25 | --- | 140.17 | 141.71 | 144.87 | --- | 145.77 | 147.30 | 150.46 | --- | 151.26 | 152.79 | 155.96 | --- | 158.13 | 159.67 | 162.83 | --- |
| | | Pr Dis | 276.15 | 277.33 | 279.26 | --- | 319.35 | 320.54 | 322.47 | --- | 364.62 | 365.81 | 367.73 | --- | 413.36 | 414.55 | 416.48 | --- | 465.92 | 467.10 | 469.03 | --- | 522.00 | 523.19 | 525.11 | --- |
| | | Amps | 7.95 | 7.94 | 7.92 | --- | 9.10 | 9.09 | 9.07 | --- | 10.39 | 10.38 | 10.36 | --- | 11.78 | 11.77 | 11.75 | --- | 13.34 | 13.33 | 13.31 | --- | 15.16 | 15.15 | 15.13 | --- |
| | | Power | 2,046 | 2,044 | 2,039 | --- | 2,311 | 2,309 | 2,304 | --- | 2,607 | 2,605 | 2,600 | --- | 2,927 | 2,925 | 2,920 | --- | 3,285 | 3,283 | 3,278 | --- | 3,704 | 3,702 | 3,698 | --- |
| | 1390 | MBh | 35,071 | 35,554 | 36,575 | --- | 34,765 | 35,248 | 36,269 | --- | 33,872 | 34,355 | 35,376 | --- | 32,337 | 32,819 | 33,841 | --- | 30,460 | 30,943 | 31,964 | --- | 28,746 | 29,229 | 30,250 | --- |
| | | S/T | 0.75 | 0.67 | 0.52 | --- | 0.76 | 0.67 | 0.53 | --- | 0.78 | 0.70 | 0.55 | --- | 1.00 | 0.72 | 0.58 | --- | 1.00 | 0.75 | 0.60 | --- | 1.00 | 0.80 | 0.65 | --- |
| | | ΔT | 16.82 | 15.10 | 11.89 | --- | 16.77 | 15.05 | 11.84 | --- | 17.01 | 15.29 | 12.08 | --- | 16.75 | 15.03 | 11.83 | --- | 16.52 | 14.81 | 11.60 | --- | 17.60 | 15.88 | 12.67 | --- |
| | | Pr Suc | 127.65 | 129.19 | 132.35 | --- | 135.21 | 136.74 | 139.90 | --- | 141.83 | 143.36 | 146.52 | --- | 147.42 | 148.95 | 152.12 | --- | 152.91 | 154.44 | 157.61 | --- | 159.78 | 161.32 | 164.48 | --- |
| | | Pr Dis | 278.01 | 279.20 | 281.12 | --- | 321.22 | 322.40 | 324.33 | --- | 366.48 | 367.67 | 369.60 | --- | 415.22 | 416.41 | 418.34 | --- | 467.78 | 468.97 | 470.89 | --- | 523.86 | 525.05 | 526.97 | --- |
| | | Amps | 7.99 | 7.98 | 7.96 | --- | 9.15 | 9.14 | 9.12 | --- | 10.43 | 10.42 | 10.40 | --- | 11.82 | 11.81 | 11.80 | --- | 13.38 | 13.37 | 13.35 | --- | 15.20 | 15.20 | 15.18 | --- |
| | | Power | 2,055 | 2,053 | 2,049 | --- | 2,320 | 2,318 | 2,314 | --- | 2,616 | 2,614 | 2,610 | --- | 2,936 | 2,934 | 2,930 | --- | 3,294 | 3,292 | 3,288 | --- | 3,714 | 3,712 | 3,707 | --- |
| 75 | 1130 | MBh | 34,277 | 34,760 | 35,781 | 37,341 | 33,971 | 34,454 | 35,475 | 37,035 | 33,078 | 33,561 | 34,582 | 36,142 | 31,542 | 32,025 | 33,046 | 34,606 | 29,666 | 30,148 | 31,170 | 32,729 | 27,952 | 28,435 | 29,456 | 31,016 |
| | | S/T | 0.80 | 0.72 | 0.58 | 0.42 | 0.81 | 0.73 | 0.58 | 0.43 | 1.00 | 0.76 | 0.61 | 0.46 | 1.00 | 0.78 | 0.63 | 0.48 | 1.00 | 0.80 | 0.66 | 0.50 | 1.00 | 1.00 | 0.71 | 0.56 |
| | | ΔT | 22.17 | 20.45 | 17.24 | 13.92 | 22.12 | 20.40 | 17.19 | 13.87 | 22.36 | 20.65 | 17.44 | 14.11 | 22.10 | 20.39 | 17.18 | 13.85 | 21.88 | 20.16 | 16.95 | 13.62 | 22.95 | 21.23 | 18.02 | 14.70 |
| | | Pr Suc | 124.51 | 126.05 | 129.21 | 134.50 | 132.07 | 133.60 | 136.77 | 142.05 | 138.69 | 140.22 | 143.38 | 148.67 | 144.28 | 145.81 | 148.98 | 154.26 | 149.77 | 151.31 | 154.47 | 159.76 | 156.65 | 158.18 | 161.34 | 166.63 |
| | | Pr Dis | 274.48 | 275.67 | 277.59 | 282.37 | 317.69 | 318.88 | 320.80 | 325.57 | 362.95 | 364.14 | 366.07 | 370.84 | 411.70 | 412.88 | 414.81 | 419.58 | 464.25 | 465.44 | 467.36 | 472.14 | 520.33 | 521.52 | 523.45 | 528.22 |
| | | Amps | 7.90 | 7.89 | 7.87 | 7.95 | 9.05 | 9.04 | 9.02 | 9.11 | 10.33 | 10.32 | 10.31 | 10.39 | 11.73 | 11.72 | 11.70 | 11.79 | 13.28 | 13.27 | 13.25 | 13.34 | 15.11 | 15.10 | 15.08 | 15.17 |
| | | Power | 2,033 | 2,031 | 2,026 | 2,047 | 2,298 | 2,296 | 2,291 | 2,312 | 2,594 | 2,592 | 2,587 | 2,607 | 2,914 | 2,912 | 2,907 | 2,928 | 3,272 | 3,270 | 3,265 | 3,285 | 3,691 | 3,689 | 3,685 | 3,705 |
| | 1260 | MBh | 34,653 | 35,136 | 36,157 | 37,717 | 34,347 | 34,830 | 35,851 | 37,411 | 33,454 | 33,937 | 34,958 | 36,518 | 31,919 | **32,402** | 33,423 | 34,983 | 30,042 | 30,525 | 31,546 | 33,106 | 28,328 | 28,811 | 29,832 | 31,392 |
| | | S/T | 0.86 | 0.77 | 0.63 | 0.47 | 1.00 | 0.78 | 0.63 | 0.48 | 1.00 | 0.81 | 0.66 | 0.51 | 1.00 | **0.83** | 0.68 | 0.53 | 1.00 | 0.85 | 0.71 | 0.55 | 1.00 | 1.00 | 0.76 | 0.61 |
| | | ΔT | 21.33 | 19.61 | 16.40 | 13.07 | 21.28 | 19.56 | 16.35 | 13.03 | 21.52 | 19.80 | 16.59 | 13.27 | 21.26 | **19.54** | 16.33 | 13.01 | 21.03 | 19.31 | 16.11 | 12.78 | 22.11 | 20.39 | 17.18 | 13.86 |
| | | Pr Suc | 126.03 | 127.57 | 130.73 | 136.02 | 133.59 | 135.12 | 138.28 | 143.57 | 140.20 | 141.74 | 144.90 | 150.19 | 145.80 | **147.33** | 150.49 | 155.78 | 151.29 | 152.82 | 155.98 | 161.27 | 158.16 | 159.70 | 162.86 | 168.15 |
| | | Pr Dis | 276.39 | 277.58 | 279.50 | 284.27 | 319.60 | 320.78 | 322.71 | 327.48 | 364.86 | 366.05 | 367.98 | 372.75 | 413.61 | **414.79** | 416.72 | 421.49 | 466.16 | 467.35 | 469.27 | 474.04 | 522.24 | 523.43 | 525.35 | 530.13 |
| | | Amps | 7.94 | 7.93 | 7.91 | 8.00 | 9.10 | 9.09 | 9.07 | 9.16 | 10.38 | 10.37 | 10.35 | 10.44 | 11.77 | **11.77** | 11.75 | 11.83 | 13.33 | 13.32 | 13.30 | 13.39 | 15.15 | 15.15 | 15.13 | 15.21 |
| | | Power | 2,044 | 2,042 | 2,037 | 2,058 | 2,309 | 2,307 | 2,302 | 2,323 | 2,605 | 2,603 | 2,598 | 2,619 | 2,925 | **2,923** | 2,919 | 2,939 | 3,283 | 3,281 | 3,276 | 3,297 | 3,703 | 3,701 | 3,696 | 3,716 |
| | 1390 | MBh | 35,091 | 35,574 | 36,595 | 38,155 | 34,785 | 35,268 | 36,289 | 37,849 | 33,892 | 34,375 | 35,396 | 36,956 | 32,357 | 32,839 | 33,861 | 35,420 | 30,480 | 30,962 | 31,984 | 33,543 | 28,766 | 29,249 | 30,270 | 31,830 |
| | | S/T | 0.89 | 0.81 | 0.66 | 0.51 | 1.00 | 0.81 | 0.67 | 0.51 | 1.00 | 0.84 | 0.69 | 0.54 | 1.00 | 0.86 | 0.71 | 0.56 | 1.00 | 0.88 | 0.74 | 0.58 | 1.00 | 1.00 | 0.79 | 0.64 |
| | | ΔT | 20.60 | 18.88 | 15.67 | 12.34 | 20.55 | 18.83 | 15.62 | 12.30 | 20.79 | 19.07 | 15.86 | 12.54 | 20.53 | 18.81 | 15.60 | 12.28 | 20.30 | 18.58 | 15.38 | 12.05 | 21.38 | 19.66 | 16.45 | 13.13 |
| | | Pr Suc | 127.68 | 129.22 | 132.38 | 137.67 | 135.24 | 136.77 | 139.93 | 145.22 | 141.85 | 143.39 | 146.55 | 151.84 | 147.45 | 148.98 | 152.14 | 157.43 | 152.94 | 154.47 | 157.64 | 162.92 | 159.81 | 161.35 | 164.51 | 169.80 |
| | | Pr Dis | 278.25 | 279.44 | 281.36 | 286.14 | 321.46 | 322.65 | 324.57 | 329.34 | 366.72 | 367.91 | 369.84 | 374.61 | 415.47 | 416.65 | 418.58 | 423.35 | 468.02 | 469.21 | 471.13 | 475.91 | 524.10 | 525.29 | 527.22 | 531.99 |
| | | Amps | 7.99 | 7.98 | 7.96 | 8.04 | 9.14 | 9.13 | 9.11 | 9.20 | 10.42 | 10.42 | 10.40 | 10.48 | 11.82 | 11.81 | 11.79 | 11.88 | 13.37 | 13.36 | 13.34 | 13.43 | 15.20 | 15.19 | 15.17 | 15.26 |
| | | Power | 2,054 | 2,052 | 2,047 | 2,067 | 2,319 | 2,317 | 2,312 | 2,332 | 2,615 | 2,612 | 2,608 | 2,628 | 2,935 | 2,933 | 2,928 | 2,948 | 3,293 | 3,290 | 3,286 | 3,306 | 3,712 | 3,710 | 3,706 | 3,726 |

IDB*: Entering Indoor Dry Bulb Temperature

Shaded area reflects ACCA (TVA) conditions.

kW = Total system power

High and low pressures are measured at the liquid and suction service valves.

Amps = outdoor unit amps

## Expanded Cooling Data — DZ18VC0361A* / DV59PECD14A* (High Stage)

| | | | Outdoor Ambient Temperature | | | | | | | | | | | | | | | | | | | | | | | |
|---|---|---|---|---|---|---|---|---|---|---|---|---|---|---|---|---|---|---|---|---|---|---|---|---|---|---|
| | | | 65 | | | | 75 | | | | 85 | | | | 95 | | | | 105 | | | | 115 | | | |
| | | | Entering Indoor Wet Bulb Temperature | | | | | | | | | | | | | | | | | | | | | | | |
| ID DB | Air | ID WB | 59 | 63 | 67 | 71 | 59 | 63 | 67 | 71 | 59 | 63 | 67 | 71 | 59 | 63 | 67 | 71 | 59 | 63 | 67 | 71 | 59 | 63 | 67 | 71 |
| 80 | 1130 | MBh | 34,454 | 34,937 | 35,958 | 37,518 | 34,148 | 34,631 | 35,652 | 37,212 | 33,255 | 33,738 | 34,759 | 36,319 | 31,720 | 32,202 | 33,224 | 34,783 | 29,843 | 30,325 | 31,347 | 32,906 | 28,129 | 28,612 | 29,633 | 31,193 |
| | | S/T | 1.00 | 0.86 | 0.71 | 0.56 | 1.00 | 0.86 | 0.72 | 0.56 | 1.00 | 0.89 | 0.75 | 0.59 | 1.00 | 1.00 | 0.77 | 0.61 | 1.00 | 1.00 | 0.79 | 0.64 | 1.00 | 1.00 | 0.85 | 0.69 |
| | | ΔT | 25.97 | 24.26 | 21.05 | 17.72 | 25.93 | 24.21 | 21.00 | 17.67 | 26.17 | 24.45 | 21.24 | 17.92 | 25.91 | 24.19 | 20.98 | 17.66 | 25.68 | 23.96 | 20.75 | 17.43 | 26.76 | 25.04 | 21.83 | 18.50 |
| | | Pr Suc | 125.06 | 126.60 | 129.76 | 135.05 | 132.62 | 134.15 | 137.31 | 142.60 | 139.24 | 140.77 | 143.93 | 149.22 | 144.83 | 146.36 | 149.53 | 154.81 | 150.32 | 151.85 | 155.02 | 160.30 | 157.19 | 158.73 | 161.89 | 167.18 |
| | | Pr Dis | 274.98 | 276.17 | 278.10 | 282.87 | 318.19 | 319.38 | 321.31 | 326.08 | 363.46 | 364.65 | 366.57 | 371.34 | 412.20 | 413.39 | 415.31 | 420.09 | 464.75 | 465.94 | 467.87 | 472.64 | 520.84 | 522.02 | 523.95 | 528.72 |
| | | Amps | 7.90 | 7.89 | 7.87 | 7.96 | 9.05 | 9.04 | 9.02 | 9.11 | 10.34 | 10.33 | 10.31 | 10.40 | 11.73 | 11.72 | 11.70 | 11.79 | 13.29 | 13.28 | 13.26 | 13.35 | 15.11 | 15.10 | 15.08 | 15.17 |
| | | Power | 2,034 | 2,032 | 2,028 | 2,048 | 2,299 | 2,297 | 2,293 | 2,313 | 2,595 | 2,593 | 2,589 | 2,609 | 2,915 | 2,913 | 2,909 | 2,929 | 3,273 | 3,271 | 3,267 | 3,287 | 3,693 | 3,691 | 3,686 | 3,707 |
| | 1260 | MBh | 34,830 | 35,313 | 36,334 | 37,894 | 34,524 | 35,007 | 36,028 | 37,588 | 33,632 | 34,114 | 35,136 | 36,695 | 32,096 | 32,579 | **33,600** | 35,160 | 30,219 | 30,702 | 31,723 | 33,283 | 28,505 | 28,988 | 30,009 | 31,569 |
| | | S/T | 1.00 | 0.91 | 0.76 | 0.61 | 1.00 | 0.92 | 0.77 | 0.62 | 1.00 | 0.94 | 0.80 | 0.64 | 1.00 | 1.00 | **0.82** | 0.66 | 1.00 | 1.00 | 0.84 | 0.69 | 1.00 | 1.00 | 0.90 | 0.74 |
| | | ΔT | 25.13 | 23.41 | 20.20 | 16.88 | 25.09 | 23.37 | 20.16 | 16.83 | 25.33 | 23.61 | 20.40 | 17.07 | 25.07 | 23.35 | **20.14** | 16.81 | 24.84 | 23.12 | 19.91 | 16.59 | 25.92 | 24.20 | 20.99 | 17.66 |
| | | Pr Suc | 126.58 | 128.11 | 131.28 | 136.56 | 134.14 | 135.67 | 138.83 | 144.12 | 140.75 | 142.29 | 145.45 | 150.74 | 146.35 | 147.88 | **151.04** | 156.33 | 151.84 | 153.37 | 156.53 | 161.82 | 158.71 | 160.25 | 163.41 | 168.70 |
| | | Pr Dis | 276.89 | 278.08 | 280.01 | 284.78 | 320.10 | 321.29 | 323.21 | 327.99 | 365.37 | 366.55 | 368.48 | 373.25 | 414.11 | 415.30 | **417.22** | 422.00 | 466.66 | 467.85 | 469.78 | 474.55 | 522.74 | 523.93 | 525.86 | 530.63 |
| | | Amps | 7.95 | 7.94 | 7.92 | 8.01 | 9.10 | 9.09 | 9.07 | 9.16 | 10.39 | 10.38 | 10.36 | 10.45 | 11.78 | 11.77 | **11.75** | 11.84 | 13.34 | 13.33 | 13.31 | 13.40 | 15.16 | 15.15 | 15.13 | 15.22 |
| | | Power | 2,045 | 2,043 | 2,039 | 2,059 | 2,310 | 2,308 | 2,304 | 2,324 | 2,606 | 2,604 | 2,600 | 2,620 | 2,927 | 2,924 | **2,920** | 2,940 | 3,284 | 3,282 | 3,278 | 3,298 | 3,704 | 3,702 | 3,697 | 3,718 |
| | 1390 | MBh | 35,268 | 35,751 | 36,772 | 38,332 | 34,962 | 35,445 | 36,466 | 38,026 | 34,069 | 34,552 | 35,573 | 37,133 | 32,534 | 33,016 | 34,038 | 35,597 | 30,657 | 31,140 | 32,161 | 33,721 | 28,943 | 29,426 | 30,447 | 32,007 |
| | | S/T | 1.00 | 0.94 | 0.79 | 0.64 | 1.00 | 0.95 | 0.80 | 0.65 | 1.00 | 0.97 | 0.83 | 0.67 | 1.00 | 1.00 | 0.85 | 0.70 | 1.00 | 1.00 | 0.87 | 0.72 | 1.00 | 1.00 | 0.93 | 0.77 |
| | | ΔT | 24.40 | 22.68 | 19.47 | 16.15 | 24.36 | 22.64 | 19.43 | 16.10 | 24.60 | 22.88 | 19.67 | 16.34 | 24.34 | 22.62 | 19.41 | 16.08 | 24.11 | 22.39 | 19.18 | 15.86 | 25.18 | 23.47 | 20.26 | 16.93 |
| | | Pr Suc | 128.23 | 129.77 | 132.93 | 138.22 | 135.79 | 137.32 | 140.48 | 145.77 | 142.40 | 143.94 | 147.10 | 152.39 | 148.00 | 149.53 | 152.69 | 157.98 | 153.49 | 155.02 | 158.18 | 163.47 | 160.36 | 161.90 | 165.06 | 170.35 |
| | | Pr Dis | 278.75 | 279.94 | 281.87 | 286.64 | 321.96 | 323.15 | 325.08 | 329.85 | 367.23 | 368.42 | 370.34 | 375.11 | 415.97 | 417.16 | 419.08 | 423.86 | 468.52 | 469.71 | 471.64 | 476.41 | 524.61 | 525.79 | 527.72 | 532.49 |
| | | Amps | 7.99 | 7.98 | 7.96 | 8.05 | 9.14 | 9.13 | 9.12 | 9.20 | 10.43 | 10.42 | 10.40 | 10.49 | 11.82 | 11.81 | 11.79 | 11.88 | 13.38 | 13.37 | 13.35 | 13.44 | 15.20 | 15.19 | 15.17 | 15.26 |
| | | Power | 2,055 | 2,053 | 2,048 | 2,069 | 2,320 | 2,318 | 2,313 | 2,334 | 2,616 | 2,614 | 2,609 | 2,630 | 2,936 | 2,934 | 2,930 | 2,950 | 3,294 | 3,292 | 3,287 | 3,308 | 3,714 | 3,712 | 3,707 | 3,727 |
| 85 | 1130 | MBh | 35,030 | 35,513 | 36,534 | 38,094 | 34,724 | 35,207 | 36,228 | 37,788 | 33,831 | 34,314 | 35,335 | 36,895 | 32,296 | 32,778 | 33,800 | 35,359 | 30,419 | 30,901 | 31,923 | 33,482 | 28,705 | 29,188 | 30,209 | 31,769 |
| | | S/T | 1.00 | 0.97 | 0.82 | 0.67 | 1.00 | 1.00 | 0.83 | 0.67 | 1.00 | 1.00 | 0.85 | 0.70 | 1.00 | 1.00 | 0.88 | 0.72 | 1.00 | 1.00 | 0.90 | 0.75 | 1.00 | 1.00 | 1.00 | 0.80 |
| | | ΔT | 29.35 | 27.63 | 24.42 | 21.10 | 29.30 | 27.58 | 24.37 | 21.05 | 29.54 | 27.83 | 24.62 | 21.29 | 29.28 | 27.57 | 24.36 | 21.03 | 29.06 | 27.34 | 24.13 | 20.80 | 30.13 | 28.41 | 25.20 | 21.88 |
| | | Pr Suc | 126.92 | 128.46 | 131.62 | 136.91 | 134.48 | 136.01 | 139.18 | 144.46 | 141.10 | 142.63 | 145.79 | 151.08 | 146.69 | 148.22 | 151.39 | 156.67 | 152.18 | 153.72 | 156.88 | 162.17 | 159.06 | 160.59 | 163.75 | 169.04 |
| | | Pr Dis | 276.27 | 277.46 | 279.38 | 284.16 | 319.48 | 320.67 | 322.59 | 327.37 | 364.75 | 365.93 | 367.86 | 372.63 | 413.49 | 414.68 | 416.60 | 421.38 | 466.04 | 467.23 | 469.15 | 473.93 | 522.12 | 523.31 | 525.24 | 530.01 |
| | | Amps | 7.92 | 7.91 | 7.89 | 7.98 | 9.08 | 9.07 | 9.05 | 9.14 | 10.36 | 10.35 | 10.33 | 10.42 | 11.75 | 11.75 | 11.73 | 11.81 | 13.31 | 13.30 | 13.28 | 13.37 | 15.13 | 15.13 | 15.11 | 15.19 |
| | | Power | 2,039 | 2,037 | 2,033 | 2,053 | 2,304 | 2,302 | 2,298 | 2,318 | 2,600 | 2,598 | 2,594 | 2,614 | 2,920 | 2,918 | 2,914 | 2,934 | 3,278 | 3,276 | 3,272 | 3,292 | 3,698 | 3,696 | 3,691 | 3,712 |
| | 1260 | MBh | 35,406 | 35,889 | 36,910 | 38,470 | 35,100 | 35,583 | 36,604 | 38,164 | 34,208 | 34,690 | 35,712 | 37,271 | 32,672 | 33,155 | 34,176 | 35,736 | 30,795 | 31,278 | 32,299 | 33,859 | 29,081 | 29,564 | 30,585 | 32,145 |
| | | S/T | 1.00 | 1.00 | 0.87 | 0.72 | 1.00 | 1.00 | 0.88 | 0.72 | 1.00 | 1.00 | 0.91 | 0.75 | 1.00 | 1.00 | 0.93 | 0.77 | 1.00 | 1.00 | 1.00 | 0.80 | 1.00 | 1.00 | 1.00 | 0.85 |
| | | ΔT | 28.51 | 26.79 | 23.58 | 20.25 | 28.46 | 26.74 | 23.53 | 20.21 | 28.70 | 26.98 | 23.77 | 20.45 | 28.44 | 26.72 | 23.51 | 20.19 | 28.21 | 26.49 | 23.29 | 19.96 | 29.29 | 27.57 | 24.36 | 21.04 |
| | | Pr Suc | 128.44 | 129.98 | 133.14 | 138.43 | 136.00 | 137.53 | 140.69 | 145.98 | 142.61 | 144.15 | 147.31 | 152.60 | 148.21 | 149.74 | 152.90 | 158.19 | 153.70 | 155.23 | 158.39 | 163.68 | 160.57 | 162.11 | 165.27 | 170.56 |
| | | Pr Dis | 278.18 | 279.37 | 281.29 | 286.07 | 321.39 | 322.58 | 324.50 | 329.27 | 366.65 | 367.84 | 369.77 | 374.54 | 415.40 | 416.58 | 418.51 | 423.28 | 467.95 | 469.14 | 471.06 | 475.84 | 524.03 | 525.22 | 527.15 | 531.92 |
| | | Amps | 7.97 | 7.96 | 7.94 | 8.03 | 9.12 | 9.12 | 9.10 | 9.18 | 10.41 | 10.40 | 10.38 | 10.47 | 11.80 | 11.79 | 11.77 | 11.86 | 13.36 | 13.35 | 13.33 | 13.42 | 15.18 | 15.17 | 15.15 | 15.24 |
| | | Power | 2,050 | 2,048 | 2,044 | 2,064 | 2,316 | 2,313 | 2,309 | 2,329 | 2,611 | 2,609 | 2,605 | 2,625 | 2,932 | 2,930 | 2,925 | 2,945 | 3,289 | 3,287 | 3,283 | 3,303 | 3,709 | 3,707 | 3,702 | 3,723 |
| | 1390 | MBh | 35,844 | 36,327 | 37,348 | 38,908 | 35,538 | 36,021 | 37,042 | 38,602 | 34,645 | 35,128 | 36,149 | 37,709 | 33,110 | 33,592 | 34,614 | 36,173 | 31,233 | 31,716 | 32,737 | 34,297 | 29,519 | 30,002 | 31,023 | 32,583 |
| | | S/T | 1.00 | 1.00 | 0.90 | 0.75 | 1.00 | 1.00 | 0.91 | 0.76 | 1.00 | 1.00 | 0.94 | 0.78 | 1.00 | 1.00 | 0.96 | 0.80 | 1.00 | 1.00 | 1.00 | 0.83 | 1.00 | 1.00 | 1.00 | 0.88 |
| | | ΔT | 27.78 | 26.06 | 22.85 | 19.52 | 27.73 | 26.01 | 22.80 | 19.48 | 27.97 | 26.25 | 23.04 | 19.72 | 27.71 | 25.99 | 22.78 | 19.46 | 27.48 | 25.76 | 22.56 | 19.23 | 28.56 | 26.84 | 23.63 | 20.31 |
| | | Pr Suc | 130.09 | 131.63 | 134.79 | 140.08 | 137.65 | 139.18 | 142.34 | 147.63 | 144.26 | 145.80 | 148.96 | 154.25 | 149.86 | 151.39 | 154.56 | 159.84 | 155.35 | 156.88 | 160.05 | 165.33 | 162.22 | 163.76 | 166.92 | 172.21 |
| | | Pr Dis | 280.04 | 281.23 | 283.15 | 287.93 | 323.25 | 324.44 | 326.36 | 331.14 | 368.52 | 369.70 | 371.63 | 376.40 | 417.26 | 418.45 | 420.37 | 425.15 | 469.81 | 471.00 | 472.92 | 477.70 | 525.89 | 527.08 | 529.01 | 533.78 |
| | | Amps | 8.01 | 8.00 | 7.98 | 8.07 | 9.17 | 9.16 | 9.14 | 9.23 | 10.45 | 10.44 | 10.42 | 10.51 | 11.84 | 11.84 | 11.82 | 11.90 | 13.40 | 13.39 | 13.37 | 13.46 | 15.22 | 15.22 | 15.20 | 15.28 |
| | | Power | 2,060 | 2,058 | 2,054 | 2,074 | 2,325 | 2,323 | 2,319 | 2,339 | 2,621 | 2,619 | 2,614 | 2,635 | 2,941 | 2,939 | 2,935 | 2,955 | 3,299 | 3,297 | 3,292 | 3,313 | 3,719 | 3,717 | 3,712 | 3,732 |

IDB*: Entering Indoor Dry Bulb Temperature

Shaded area reflects AHRI conditions.

kW = Total system power

High and low pressures are measured at the liquid and suction service valves.

Amps = outdoor unit amps

# Expanded Cooling Data — DZ18VC0361A* / DV59PECD14A* (Low Stage)

| | | | Outdoor Ambient Temperature | | | | | | | | | | | | | | | | | | | | | | | |
|---|---|---|---|---|---|---|---|---|---|---|---|---|---|---|---|---|---|---|---|---|---|---|---|---|---|---|
| | | | 65 | | | | 75 | | | | 85 | | | | 95 | | | | 105 | | | | 115 | | | |
| | | | Entering Indoor Wet Bulb Temperature | | | | | | | | | | | | | | | | | | | | | | | |
| ID DB | Air | ID WB | 59 | 63 | 67 | 71 | 59 | 63 | 67 | 71 | 59 | 63 | 67 | 71 | 59 | 63 | 67 | 71 | 59 | 63 | 67 | 71 | 59 | 63 | 67 | 71 |
| 70 | 870 | MBh | 24,631 | 24,978 | 25,712 | --- | 24,411 | 24,758 | 25,492 | --- | 23,769 | 24,116 | 24,851 | --- | 22,665 | 23,012 | 23,746 | --- | 21,315 | 21,663 | 22,397 | --- | 20,083 | 20,431 | 21,165 | --- |
| | | S/T | 0.68 | 0.60 | 0.45 | --- | 0.69 | 0.61 | 0.46 | --- | 0.72 | 0.63 | 0.48 | --- | 1.00 | 0.66 | 0.51 | --- | 1.00 | 0.68 | 0.53 | --- | 1.00 | 0.74 | 0.59 | --- |
| | | ΔT | 17.75 | 16.09 | 12.99 | --- | 17.70 | 16.04 | 12.94 | --- | 17.93 | 16.27 | 13.18 | --- | 17.68 | 16.02 | 12.93 | --- | 17.46 | 15.80 | 12.71 | --- | 18.50 | 16.84 | 13.74 | --- |
| | | Pr Suc | 127.97 | 129.55 | 132.80 | --- | 135.74 | 137.32 | 140.57 | --- | 142.54 | 144.12 | 147.37 | --- | 148.29 | 149.87 | 153.12 | --- | 153.94 | 155.51 | 158.76 | --- | 161.00 | 162.58 | 165.83 | --- |
| | | Pr Dis | 262.17 | 263.31 | 265.15 | --- | 303.48 | 304.62 | 306.46 | --- | 346.75 | 347.89 | 349.73 | --- | 393.35 | 394.49 | 396.33 | --- | 443.59 | 444.73 | 446.57 | --- | 497.21 | 498.34 | 500.18 | --- |
| | | Amps | 4.97 | 4.97 | 4.95 | --- | 5.70 | 5.69 | 5.68 | --- | 6.50 | 6.50 | 6.49 | --- | 7.38 | 7.37 | 7.36 | --- | 8.36 | 8.35 | 8.34 | --- | 9.51 | 9.50 | 9.49 | --- |
| | | Power | 1,280 | 1,278 | 1,276 | --- | 1,446 | 1,445 | 1,442 | --- | 1,633 | 1,631 | 1,628 | --- | 1,834 | 1,833 | 1,830 | --- | 2,059 | 2,058 | 2,055 | --- | 2,323 | 2,322 | 2,319 | --- |
| | 970 | MBh | 24,901 | 25,248 | 25,983 | --- | 24,681 | 25,028 | 25,763 | --- | 24,039 | 24,387 | 25,121 | --- | 22,935 | 23,282 | 24,017 | --- | 21,586 | 21,933 | 22,667 | --- | 20,354 | 20,701 | 21,435 | --- |
| | | S/T | 0.74 | 0.65 | 0.50 | --- | 0.74 | 0.66 | 0.51 | --- | 1.00 | 0.69 | 0.54 | --- | 1.00 | 0.71 | 0.56 | --- | 1.00 | 0.73 | 0.58 | --- | 1.00 | 1.00 | 0.64 | --- |
| | | ΔT | 16.93 | 15.28 | 12.18 | --- | 16.89 | 15.23 | 12.13 | --- | 17.12 | 15.46 | 12.37 | --- | 16.87 | 15.21 | 12.12 | --- | 16.65 | 14.99 | 11.89 | --- | 17.69 | 16.03 | 12.93 | --- |
| | | Pr Suc | 129.53 | 131.11 | 134.36 | --- | 137.30 | 138.87 | 142.12 | --- | 144.10 | 145.68 | 148.93 | --- | 149.85 | 151.43 | 154.68 | --- | 155.49 | 157.07 | 160.32 | --- | 162.56 | 164.14 | 167.39 | --- |
| | | Pr Dis | 264.00 | 265.13 | 266.97 | --- | 305.30 | 306.44 | 308.28 | --- | 348.58 | 349.71 | 351.55 | --- | 395.18 | 396.31 | 398.15 | --- | 445.42 | 446.55 | 448.39 | --- | 499.03 | 500.17 | 502.01 | --- |
| | | Amps | 5.00 | 5.00 | 4.98 | --- | 5.73 | 5.72 | 5.71 | --- | 6.54 | 6.53 | 6.52 | --- | 7.41 | 7.41 | 7.39 | --- | 8.39 | 8.38 | 8.37 | --- | 9.54 | 9.53 | 9.52 | --- |
| | | Power | 1,287 | 1,285 | 1,283 | --- | 1,453 | 1,452 | 1,449 | --- | 1,640 | 1,638 | 1,635 | --- | 1,841 | 1,840 | 1,837 | --- | 2,066 | 2,065 | 2,062 | --- | 2,330 | 2,329 | 2,326 | --- |
| | 1070 | MBh | 25,216 | 25,563 | 26,297 | --- | 24,996 | 25,343 | 26,077 | --- | 24,354 | 24,701 | 25,435 | --- | 23,250 | 23,597 | 24,331 | --- | 21,900 | 22,247 | 22,982 | --- | 20,668 | 21,015 | 21,750 | --- |
| | | S/T | 0.77 | 0.68 | 0.53 | --- | 0.78 | 0.69 | 0.54 | --- | 1.00 | 0.72 | 0.57 | --- | 1.00 | 0.74 | 0.59 | --- | 1.00 | 0.77 | 0.62 | --- | 1.00 | 1.00 | 0.67 | --- |
| | | ΔT | 16.23 | 14.57 | 11.47 | --- | 16.18 | 14.53 | 11.43 | --- | 16.42 | 14.76 | 11.66 | --- | 16.17 | 14.51 | 11.41 | --- | 15.95 | 14.29 | 11.19 | --- | 16.98 | 15.33 | 12.23 | --- |
| | | Pr Suc | 131.23 | 132.80 | 136.05 | --- | 138.99 | 140.57 | 143.82 | --- | 145.79 | 147.37 | 150.62 | --- | 151.55 | 153.12 | 156.37 | --- | 157.19 | 158.77 | 162.02 | --- | 164.26 | 165.83 | 169.08 | --- |
| | | Pr Dis | 265.77 | 266.91 | 268.75 | --- | 307.08 | 308.22 | 310.06 | --- | 350.36 | 351.49 | 353.33 | --- | 396.95 | 398.09 | 399.93 | --- | 447.19 | 448.33 | 450.17 | --- | 500.81 | 501.94 | 503.79 | --- |
| | | Amps | 5.03 | 5.02 | 5.01 | --- | 5.75 | 5.75 | 5.73 | --- | 6.56 | 6.56 | 6.54 | --- | 7.44 | 7.43 | 7.42 | --- | 8.42 | 8.41 | 8.40 | --- | 9.56 | 9.56 | 9.55 | --- |
| | | Power | 1,293 | 1,292 | 1,289 | --- | 1,460 | 1,458 | 1,455 | --- | 1,646 | 1,644 | 1,641 | --- | 1,847 | 1,846 | 1,843 | --- | 2,072 | 2,071 | 2,068 | --- | 2,336 | 2,335 | 2,332 | --- |
| 75 | 870 | MBh | 24,645 | 24,992 | 25,727 | 26,848 | 24,425 | 24,772 | 25,507 | 26,628 | 23,783 | 24,131 | 24,865 | 25,986 | 22,679 | 23,026 | 23,761 | 24,882 | 21,330 | 21,677 | 22,411 | 23,533 | 20,098 | 20,445 | 21,179 | 22,301 |
| | | S/T | 0.83 | 0.74 | 0.59 | 0.43 | 1.00 | 0.75 | 0.60 | 0.44 | 1.00 | 0.78 | 0.63 | 0.47 | 1.00 | 0.80 | 0.65 | 0.49 | 1.00 | 1.00 | 0.67 | 0.51 | 1.00 | 1.00 | 0.73 | 0.57 |
| | | ΔT | 21.39 | 19.73 | 16.64 | 13.43 | 21.35 | 19.69 | 16.59 | 13.38 | 21.58 | 19.92 | 16.82 | 13.62 | 21.33 | 19.67 | 16.57 | 13.37 | 21.11 | 19.45 | 16.35 | 13.14 | 22.15 | 20.49 | 17.39 | 14.18 |
| | | Pr Suc | 128.00 | 129.58 | 132.83 | 138.27 | 135.77 | 137.35 | 140.60 | 146.03 | 142.57 | 144.15 | 147.40 | 152.83 | 148.32 | 149.90 | 153.15 | 158.59 | 153.97 | 155.54 | 158.79 | 164.23 | 161.03 | 162.61 | 165.86 | 171.30 |
| | | Pr Dis | 262.40 | 263.54 | 265.38 | 269.94 | 303.71 | 304.85 | 306.69 | 311.25 | 346.99 | 348.12 | 349.96 | 354.53 | 393.58 | 394.72 | 396.56 | 401.12 | 443.82 | 444.96 | 446.80 | 451.36 | 497.44 | 498.58 | 500.42 | 504.98 |
| | | Amps | 4.97 | 4.96 | 4.95 | 5.00 | 5.69 | 5.69 | 5.67 | 5.73 | 6.50 | 6.49 | 6.48 | 6.54 | 7.38 | 7.37 | 7.36 | 7.41 | 8.35 | 8.35 | 8.34 | 8.39 | 9.50 | 9.50 | 9.48 | 9.54 |
| | | Power | 1,279 | 1,277 | 1,275 | 1,287 | 1,445 | 1,444 | 1,441 | 1,454 | 1,632 | 1,630 | 1,627 | 1,640 | 1,833 | 1,832 | 1,829 | 1,842 | 2,058 | 2,057 | 2,054 | 2,067 | 2,322 | 2,321 | 2,318 | 2,331 |
| | 970 | MBh | 24,916 | 25,263 | 25,997 | 27,118 | 24,696 | 25,043 | 25,777 | 26,898 | 24,054 | 24,401 | 25,135 | 26,257 | 22,950 | 23,297 | 24,031 | 25,152 | 21,600 | 21,947 | 22,681 | 23,803 | 20,368 | 20,715 | 21,449 | 22,571 |
| | | S/T | 0.88 | 0.79 | 0.64 | 0.49 | 1.00 | 0.80 | 0.65 | 0.49 | 1.00 | 0.83 | 0.68 | 0.52 | 1.00 | 0.85 | 0.70 | 0.54 | 1.00 | 1.00 | 0.73 | 0.57 | 1.00 | 1.00 | 0.78 | 0.62 |
| | | ΔT | 20.58 | 18.92 | 15.83 | 12.62 | 20.54 | 18.88 | 15.78 | 12.57 | 20.77 | 19.11 | 16.01 | 12.80 | 20.52 | 18.86 | 15.76 | 12.55 | 20.30 | 18.64 | 15.54 | 12.33 | 21.34 | 19.68 | 16.58 | 13.37 |
| | | Pr Suc | 129.56 | 131.14 | 134.39 | 139.82 | 137.33 | 138.90 | 142.15 | 147.59 | 144.13 | 145.71 | 148.96 | 154.39 | 149.88 | 151.46 | 154.71 | 160.14 | 155.52 | 157.10 | 160.35 | 165.79 | 162.59 | 164.17 | 167.42 | 172.86 |
| | | Pr Dis | 264.23 | 265.36 | 267.20 | 271.77 | 305.53 | 306.67 | 308.51 | 313.07 | 348.81 | 349.94 | 351.78 | 356.35 | 395.41 | 396.54 | 398.38 | 402.95 | 445.65 | 446.78 | 448.62 | 453.19 | 499.26 | 500.40 | 502.24 | 506.80 |
| | | Amps | 5.00 | 4.99 | 4.98 | 5.03 | 5.72 | 5.72 | 5.70 | 5.76 | 6.53 | 6.52 | 6.51 | 6.57 | 7.41 | 7.40 | 7.39 | 7.44 | 8.38 | 8.38 | 8.37 | 8.42 | 9.53 | 9.53 | 9.51 | 9.57 |
| | | Power | 1,286 | 1,284 | 1,282 | 1,294 | 1,452 | 1,451 | 1,448 | 1,461 | 1,639 | 1,637 | 1,634 | 1,647 | 1,840 | 1,839 | 1,836 | 1,849 | 2,065 | 2,064 | 2,061 | 2,074 | 2,329 | 2,328 | 2,325 | 2,338 |
| | 1070 | MBh | 25,230 | 25,577 | 26,311 | 27,433 | 25,010 | 25,357 | 26,091 | 27,213 | 24,368 | 24,715 | 25,450 | 26,571 | 23,264 | 23,611 | 24,345 | 25,467 | 21,915 | 22,262 | 22,996 | 24,117 | 20,683 | 21,030 | 21,764 | 22,885 |
| | | S/T | 0.91 | 0.83 | 0.68 | 0.52 | 1.00 | 0.83 | 0.68 | 0.53 | 1.00 | 0.86 | 0.71 | 0.55 | 1.00 | 0.88 | 0.73 | 0.58 | 1.00 | 1.00 | 0.76 | 0.60 | 1.00 | 1.00 | 0.81 | 0.66 |
| | | ΔT | 19.88 | 18.22 | 15.12 | 11.91 | 19.83 | 18.17 | 15.08 | 11.87 | 20.07 | 18.41 | 15.31 | 12.10 | 19.82 | 18.16 | 15.06 | 11.85 | 19.59 | 17.93 | 14.84 | 11.63 | 20.63 | 18.97 | 15.88 | 12.67 |
| | | Pr Suc | 131.26 | 132.83 | 136.08 | 141.52 | 139.02 | 140.60 | 143.85 | 149.29 | 145.83 | 147.40 | 150.65 | 156.09 | 151.58 | 153.15 | 156.40 | 161.84 | 157.22 | 158.80 | 162.05 | 167.48 | 164.29 | 165.86 | 169.12 | 174.55 |
| | | Pr Dis | 266.01 | 267.14 | 268.98 | 273.54 | 307.31 | 308.45 | 310.29 | 314.85 | 350.59 | 351.72 | 353.56 | 358.13 | 397.19 | 398.32 | 400.16 | 404.72 | 447.43 | 448.56 | 450.40 | 454.96 | 501.04 | 502.18 | 504.02 | 508.58 |
| | | Amps | 5.02 | 5.02 | 5.00 | 5.06 | 5.75 | 5.74 | 5.73 | 5.79 | 6.56 | 6.55 | 6.54 | 6.59 | 7.43 | 7.43 | 7.41 | 7.47 | 8.41 | 8.41 | 8.39 | 8.45 | 9.56 | 9.55 | 9.54 | 9.60 |
| | | Power | 1,292 | 1,290 | 1,288 | 1,300 | 1,458 | 1,457 | 1,454 | 1,467 | 1,645 | 1,643 | 1,640 | 1,653 | 1,846 | 1,845 | 1,842 | 1,855 | 2,071 | 2,070 | 2,067 | 2,080 | 2,335 | 2,334 | 2,331 | 2,344 |

IDB*: Entering Indoor Dry Bulb Temperature

Shaded area reflects ACCA (TVA) conditions.

kW = Total system power

High and low pressures are measured at the liquid and suction service valves.

Amps = outdoor unit amps

# Expanded Cooling Data — DZ18VC0361A* / DV59PECD14A* (Low Stage)

| | | | Outdoor Ambient Temperature | | | | | | | | | | | | | | | | | | | | | | | |
|---|---|---|---|---|---|---|---|---|---|---|---|---|---|---|---|---|---|---|---|---|---|---|---|---|---|---|
| | | | 65 | | | | 75 | | | | 85 | | | | 95 | | | | 105 | | | | 115 | | | |
| | | | Entering Indoor Wet Bulb Temperature | | | | | | | | | | | | | | | | | | | | | | | |
| ID DB | Air | ID WB | 59 | 63 | 67 | 71 | 59 | 63 | 67 | 71 | 59 | 63 | 67 | 71 | 59 | 63 | 67 | 71 | 59 | 63 | 67 | 71 | 59 | 63 | 67 | 71 |
| | | MBh | 24,773 | 25,120 | 25,854 | 26,976 | 24,553 | 24,900 | 25,634 | 26,755 | 23,911 | 24,258 | 24,992 | 26,114 | 22,807 | 23,154 | 23,888 | 25,009 | 21,457 | 21,804 | 22,538 | 23,660 | 20,225 | 20,572 | 21,306 | 22,428 |
| | | S/T | 1.00 | 0.88 | 0.73 | 0.57 | 1.00 | 0.89 | 0.74 | 0.58 | 1.00 | 0.92 | 0.77 | 0.61 | 1.00 | 1.00 | 0.79 | 0.63 | 1.00 | 1.00 | 0.81 | 0.65 | 1.00 | 1.00 | 0.87 | 0.71 |
| | | ΔT | 25.06 | 23.41 | 20.31 | 17.10 | 25.02 | 23.36 | 20.26 | 17.05 | 25.25 | 23.59 | 20.50 | 17.29 | 25.00 | 23.34 | 20.25 | 17.04 | 24.78 | 23.12 | 20.02 | 16.82 | 25.82 | 24.16 | 21.06 | 17.85 |
| | **870** | Pr Suc | 128.57 | 130.14 | 133.39 | 138.83 | 136.33 | 137.91 | 141.16 | 146.60 | 143.13 | 144.71 | 147.96 | 153.40 | 148.89 | 150.46 | 153.71 | 159.15 | 154.53 | 156.11 | 159.36 | 164.79 | 161.60 | 163.17 | 166.43 | 171.86 |
| | | Pr Dis | 262.89 | 264.02 | 265.86 | 270.43 | 304.19 | 305.33 | 307.17 | 311.73 | 347.47 | 348.60 | 350.44 | 355.01 | 394.07 | 395.20 | 397.04 | 401.61 | 444.31 | 445.44 | 447.28 | 451.85 | 497.92 | 499.06 | 500.90 | 505.46 |
| | | Amps | 4.97 | 4.96 | 4.95 | 5.01 | 5.69 | 5.69 | 5.68 | 5.73 | 6.50 | 6.50 | 6.49 | 6.54 | 7.38 | 7.37 | 7.36 | 7.42 | 8.36 | 8.35 | 8.34 | 8.40 | 9.51 | 9.50 | 9.49 | 9.54 |
| | | Power | 1,280 | 1,278 | 1,275 | 1,288 | 1,446 | 1,445 | 1,442 | 1,455 | 1,632 | 1,631 | 1,628 | 1,641 | 1,834 | 1,832 | 1,830 | 1,842 | 2,059 | 2,057 | 2,055 | 2,067 | 2,323 | 2,321 | 2,319 | 2,331 |
| | | MBh | 25,043 | 25,390 | 26,124 | 27,246 | 24,823 | 25,170 | 25,904 | 27,026 | 24,181 | 24,528 | 25,262 | 26,384 | 23,077 | 23,424 | **24,158** | 25,280 | 21,727 | 22,075 | 22,809 | 23,930 | 20,495 | 20,843 | 21,577 | 22,698 |
| | | S/T | 1.00 | 0.93 | 0.78 | 0.63 | 1.00 | 0.94 | 0.79 | 0.63 | 1.00 | 1.00 | 0.82 | 0.66 | 1.00 | 1.00 | **0.84** | 0.68 | 1.00 | 1.00 | 0.86 | 0.71 | 1.00 | 1.00 | 1.00 | 0.76 |
| | | ΔT | 24.25 | 22.59 | 19.50 | 16.29 | 24.21 | 22.55 | 19.45 | 16.24 | 24.44 | 22.78 | 19.69 | 16.48 | 24.19 | 22.53 | **19.44** | 16.23 | 23.97 | 22.31 | 19.21 | 16.00 | 25.01 | 23.35 | 20.25 | 17.04 |
| **80** | **970** | Pr Suc | 130.12 | 131.70 | 134.95 | 140.39 | 137.89 | 139.47 | 142.72 | 148.15 | 144.69 | 146.27 | 149.52 | 154.96 | 150.44 | 152.02 | **155.27** | 160.71 | 156.09 | 157.67 | 160.92 | 166.35 | 163.16 | 164.73 | 167.98 | 173.42 |
| | | Pr Dis | 264.71 | 265.84 | 267.68 | 272.25 | 306.02 | 307.15 | 308.99 | 313.55 | 349.29 | 350.43 | 352.27 | 356.83 | 395.89 | 397.02 | **398.86** | 403.43 | 446.13 | 447.26 | 449.11 | 453.67 | 499.74 | 500.88 | 502.72 | 507.28 |
| | | Amps | 5.00 | 4.99 | 4.98 | 5.04 | 5.73 | 5.72 | 5.71 | 5.76 | 6.53 | 6.53 | 6.52 | 6.57 | 7.41 | 7.40 | **7.39** | 7.45 | 8.39 | 8.38 | 8.37 | 8.43 | 9.54 | 9.53 | 9.52 | 9.57 |
| | | Power | 1,287 | 1,285 | 1,282 | 1,295 | 1,453 | 1,452 | 1,449 | 1,462 | 1,639 | 1,638 | 1,635 | 1,648 | 1,841 | 1,839 | **1,837** | 1,849 | 2,066 | 2,064 | 2,062 | 2,074 | 2,330 | 2,328 | 2,326 | 2,338 |
| | | MBh | 25,357 | 25,705 | 26,439 | 27,560 | 25,137 | 25,485 | 26,219 | 27,340 | 24,496 | 24,843 | 25,577 | 26,699 | 23,391 | 23,739 | 24,473 | 25,594 | 22,042 | 22,389 | 23,123 | 24,245 | 20,810 | 21,157 | 21,891 | 23,013 |
| | | S/T | 1.00 | 0.97 | 0.82 | 0.66 | 1.00 | 0.97 | 0.82 | 0.66 | 1.00 | 1.00 | 0.85 | 0.69 | 1.00 | 1.00 | 0.87 | 0.71 | 1.00 | 1.00 | 0.90 | 0.74 | 1.00 | 1.00 | 1.00 | 0.80 |
| | | ΔT | 23.55 | 21.89 | 18.79 | 15.58 | 23.50 | 21.85 | 18.75 | 15.54 | 23.74 | 22.08 | 18.98 | 15.77 | 23.49 | 21.83 | 18.73 | 15.52 | 23.27 | 21.61 | 18.51 | 15.30 | 24.30 | 22.65 | 19.55 | 16.34 |
| | **1070** | Pr Suc | 131.82 | 133.40 | 136.65 | 142.08 | 139.59 | 141.16 | 144.41 | 149.85 | 146.39 | 147.97 | 151.22 | 156.65 | 152.14 | 153.72 | 156.97 | 162.40 | 157.78 | 159.36 | 162.61 | 168.05 | 164.85 | 166.43 | 169.68 | 175.12 |
| | | Pr Dis | 266.49 | 267.62 | 269.46 | 274.03 | 307.79 | 308.93 | 310.77 | 315.33 | 351.07 | 352.20 | 354.05 | 358.61 | 397.67 | 398.80 | 400.64 | 405.21 | 447.91 | 449.04 | 450.88 | 455.45 | 501.52 | 502.66 | 504.50 | 509.06 |
| | | Amps | 5.03 | 5.02 | 5.01 | 5.06 | 5.75 | 5.75 | 5.73 | 5.79 | 6.56 | 6.55 | 6.54 | 6.60 | 7.44 | 7.43 | 7.42 | 7.47 | 8.41 | 8.41 | 8.40 | 8.45 | 9.56 | 9.56 | 9.54 | 9.60 |
| | | Power | 1,293 | 1,291 | 1,288 | 1,301 | 1,459 | 1,458 | 1,455 | 1,468 | 1,645 | 1,644 | 1,641 | 1,654 | 1,847 | 1,846 | 1,843 | 1,855 | 2,072 | 2,071 | 2,068 | 2,080 | 2,336 | 2,335 | 2,332 | 2,344 |
| | | MBh | 25,187 | 25,534 | 26,268 | 27,390 | 24,967 | 25,314 | 26,048 | 27,170 | 24,325 | 24,672 | 25,406 | 26,528 | 23,221 | 23,568 | 24,302 | 25,424 | 21,871 | 22,218 | 22,953 | 24,074 | 20,639 | 20,986 | 21,721 | 22,842 |
| | | S/T | 1.00 | 0.99 | 0.84 | 0.68 | 1.00 | 1.00 | 0.85 | 0.69 | 1.00 | 1.00 | 0.88 | 0.72 | 1.00 | 1.00 | 0.90 | 0.74 | 1.00 | 1.00 | 1.00 | 0.77 | 1.00 | 1.00 | 1.00 | 0.82 |
| | | ΔT | 28.32 | 26.66 | 23.57 | 20.36 | 28.28 | 26.62 | 23.52 | 20.31 | 28.51 | 26.85 | 23.75 | 20.54 | 28.26 | 26.60 | 23.50 | 20.29 | 28.04 | 26.38 | 23.28 | 20.07 | 29.08 | 27.42 | 24.32 | 21.11 |
| | **870** | Pr Suc | 130.48 | 132.06 | 135.31 | 140.74 | 138.25 | 139.82 | 143.07 | 148.51 | 145.05 | 146.63 | 149.88 | 155.31 | 150.80 | 152.38 | 155.63 | 161.06 | 156.44 | 158.02 | 161.27 | 166.71 | 163.51 | 165.09 | 168.34 | 173.77 |
| | | Pr Dis | 264.12 | 265.25 | 267.09 | 271.66 | 305.42 | 306.56 | 308.40 | 312.96 | 348.70 | 349.83 | 351.68 | 356.24 | 395.30 | 396.43 | 398.27 | 402.84 | 445.54 | 446.67 | 448.51 | 453.08 | 499.15 | 500.29 | 502.13 | 506.69 |
| | | Amps | 4.98 | 4.98 | 4.97 | 5.02 | 5.71 | 5.70 | 5.69 | 5.75 | 6.52 | 6.51 | 6.50 | 6.56 | 7.39 | 7.39 | 7.38 | 7.43 | 8.37 | 8.37 | 8.35 | 8.41 | 9.52 | 9.51 | 9.50 | 9.56 |
| | | Power | 1,283 | 1,281 | 1,279 | 1,291 | 1,449 | 1,448 | 1,445 | 1,458 | 1,636 | 1,634 | 1,631 | 1,644 | 1,837 | 1,836 | 1,833 | 1,846 | 2,062 | 2,061 | 2,058 | 2,071 | 2,326 | 2,325 | 2,322 | 2,335 |
| | | MBh | 25,457 | 25,804 | 26,538 | 27,660 | 25,237 | 25,584 | 26,318 | 27,440 | 24,595 | 24,942 | 25,677 | 26,798 | 23,491 | 23,838 | 24,572 | 25,694 | 22,142 | 22,489 | 23,223 | 24,344 | 20,910 | 21,257 | 21,991 | 23,112 |
| | | S/T | 1.00 | 1.00 | 0.90 | 0.74 | 1.00 | 1.00 | 0.90 | 0.74 | 1.00 | 1.00 | 0.93 | 0.77 | 1.00 | 1.00 | 0.95 | 0.79 | 1.00 | 1.00 | 1.00 | 0.82 | 1.00 | 1.00 | 1.00 | 0.87 |
| | | ΔT | 27.51 | 25.85 | 22.75 | 19.55 | 27.46 | 25.81 | 22.71 | 19.50 | 27.70 | 26.04 | 22.94 | 19.73 | 27.45 | 25.79 | 22.69 | 19.48 | 27.23 | 25.57 | 22.47 | 19.26 | 28.26 | 26.61 | 23.51 | 20.30 |
| **85** | **970** | Pr Suc | 132.04 | 133.62 | 136.87 | 142.30 | 139.80 | 141.38 | 144.63 | 150.07 | 146.61 | 148.18 | 151.43 | 156.87 | 152.36 | 153.94 | 157.19 | 162.62 | 158.00 | 159.58 | 162.83 | 168.27 | 165.07 | 166.65 | 169.90 | 175.33 |
| | | Pr Dis | 265.94 | 267.08 | 268.92 | 273.48 | 307.25 | 308.38 | 310.22 | 314.79 | 350.52 | 351.66 | 353.50 | 358.06 | 397.12 | 398.26 | 400.10 | 404.66 | 447.36 | 448.50 | 450.34 | 454.90 | 500.98 | 502.11 | 503.95 | 508.51 |
| | | Amps | 5.01 | 5.01 | 5.00 | 5.05 | 5.74 | 5.73 | 5.72 | 5.78 | 6.55 | 6.54 | 6.53 | 6.59 | 7.42 | 7.42 | 7.41 | 7.46 | 8.40 | 8.40 | 8.38 | 8.44 | 9.55 | 9.54 | 9.53 | 9.59 |
| | | Power | 1,290 | 1,288 | 1,286 | 1,298 | 1,456 | 1,455 | 1,452 | 1,465 | 1,643 | 1,641 | 1,638 | 1,651 | 1,844 | 1,843 | 1,840 | 1,853 | 2,069 | 2,068 | 2,065 | 2,078 | 2,333 | 2,332 | 2,329 | 2,342 |
| | | MBh | 25,772 | 26,119 | 26,853 | 27,974 | 25,552 | 25,899 | 26,633 | 27,754 | 24,910 | 25,257 | 25,991 | 27,113 | 23,806 | 24,153 | 24,887 | 26,008 | 22,456 | 22,803 | 23,537 | 24,659 | 21,224 | 21,571 | 22,305 | 23,427 |
| | | S/T | 1.00 | 1.00 | 0.93 | 0.77 | 1.00 | 1.00 | 0.93 | 0.78 | 1.00 | 1.00 | 0.96 | 0.80 | 1.00 | 1.00 | 1.00 | 0.83 | 1.00 | 1.00 | 1.00 | 0.85 | 1.00 | 1.00 | 1.00 | 0.91 |
| | | ΔT | 26.81 | 25.15 | 22.05 | 18.84 | 26.76 | 25.10 | 22.00 | 18.80 | 26.99 | 25.34 | 22.24 | 19.03 | 26.74 | 25.08 | 21.99 | 18.78 | 26.52 | 24.86 | 21.77 | 18.56 | 27.56 | 25.90 | 22.80 | 19.60 |
| | **1070** | Pr Suc | 133.73 | 135.31 | 138.56 | 144.00 | 141.50 | 143.08 | 146.33 | 151.76 | 148.30 | 149.88 | 153.13 | 158.57 | 154.05 | 155.63 | 158.88 | 164.32 | 159.70 | 161.28 | 164.53 | 169.96 | 166.77 | 168.34 | 171.59 | 177.03 |
| | | Pr Dis | 267.72 | 268.85 | 270.69 | 275.26 | 309.03 | 310.16 | 312.00 | 316.56 | 352.30 | 353.44 | 355.28 | 359.84 | 398.90 | 400.03 | 401.87 | 406.44 | 449.14 | 450.27 | 452.11 | 456.68 | 502.75 | 503.89 | 505.73 | 510.29 |
| | | Amps | 5.04 | 5.03 | 5.02 | 5.08 | 5.77 | 5.76 | 5.75 | 5.80 | 6.57 | 6.57 | 6.56 | 6.61 | 7.45 | 7.44 | 7.43 | 7.49 | 8.43 | 8.42 | 8.41 | 8.47 | 9.58 | 9.57 | 9.56 | 9.61 |
| | | Power | 1,296 | 1,294 | 1,292 | 1,304 | 1,463 | 1,461 | 1,458 | 1,471 | 1,649 | 1,647 | 1,644 | 1,657 | 1,850 | 1,849 | 1,846 | 1,859 | 2,075 | 2,074 | 2,071 | 2,084 | 2,339 | 2,338 | 2,335 | 2,348 |

IDB*: Entering Indoor Dry Bulb Temperature

High and low pressures are measured at the liquid and suction service valves.

Shaded area reflects AHRI conditions.

kW = Total system power

Amps = outdoor unit amps

## Expanded Cooling Data — DZ18VC0481A* / DV61PECD14A* (High Stage)

| | | | Outdoor Ambient Temperature | | | | | | | | | | | | | | | | | | | | | | | |
|---|---|---|---|---|---|---|---|---|---|---|---|---|---|---|---|---|---|---|---|---|---|---|---|---|---|---|
| | | | 65 | | | | 75 | | | | 85 | | | | 95 | | | | 105 | | | | 115 | | | |
| | | | Entering Indoor Wet Bulb Temperature | | | | | | | | | | | | | | | | | | | | | | | |
| ID DB | Air | ID WB | 59 | 63 | 67 | 71 | 59 | 63 | 67 | 71 | 59 | 63 | 67 | 71 | 59 | 63 | 67 | 71 | 59 | 63 | 67 | 71 | 59 | 63 | 67 | 71 |
| 70 | 1240 | MBh | 45,888 | 46,534 | 47,902 | --- | 45,478 | 46,124 | 47,492 | --- | 44,282 | 44,929 | 46,297 | --- | 42,226 | 42,872 | 44,240 | --- | 39,712 | 40,358 | 41,726 | --- | 37,417 | 38,064 | 39,431 | --- |
| | | S/T | 0.61 | 0.53 | 0.40 | --- | 0.61 | 0.54 | 0.41 | --- | 0.64 | 0.56 | 0.43 | --- | 0.66 | 0.58 | 0.45 | --- | 0.68 | 0.60 | 0.47 | --- | 1.00 | 0.66 | 0.52 | --- |
| | | ΔT | 20.25 | 18.36 | 14.82 | --- | 20.20 | 18.31 | 14.77 | --- | 20.47 | 18.57 | 15.04 | --- | 20.18 | 18.29 | 14.75 | --- | 19.93 | 18.03 | 14.50 | --- | 21.12 | 19.22 | 15.68 | --- |
| | | Pr Suc | 118.07 | 119.52 | 122.52 | --- | 125.23 | 126.69 | 129.68 | --- | 131.50 | 132.96 | 135.96 | --- | 136.81 | 138.26 | 141.26 | --- | 142.02 | 143.47 | 146.47 | --- | 148.54 | 149.99 | 152.99 | --- |
| | | Pr Dis | 271.56 | 272.73 | 274.64 | --- | 314.34 | 315.51 | 317.42 | --- | 359.16 | 360.33 | 362.24 | --- | 407.42 | 408.59 | 410.50 | --- | 459.45 | 460.63 | 462.53 | --- | 514.98 | 516.15 | 518.06 | --- |
| | | Amps | 10.51 | 10.50 | 10.47 | --- | 12.09 | 12.08 | 12.05 | --- | 13.86 | 13.85 | 13.82 | --- | 15.78 | 15.76 | 15.74 | --- | 17.91 | 17.90 | 17.87 | --- | 20.42 | 20.41 | 20.38 | --- |
| | | Power | 2,682 | 2,679 | 2,673 | --- | 3,046 | 3,043 | 3,037 | --- | 3,453 | 3,450 | 3,444 | --- | 3,893 | 3,891 | 3,884 | --- | 4,385 | 4,382 | 4,376 | --- | 4,962 | 4,960 | 4,953 | --- |
| | 1380 | MBh | 46,384 | 47,030 | 48,398 | --- | 45,974 | 46,621 | 47,988 | --- | 44,778 | 45,425 | 46,793 | --- | 42,722 | 43,368 | 44,736 | --- | 40,208 | 40,855 | 42,222 | --- | 37,913 | 38,560 | 39,927 | --- |
| | | S/T | 0.65 | 0.58 | 0.45 | --- | 0.66 | 0.58 | 0.45 | --- | 0.68 | 0.61 | 0.48 | --- | 0.70 | 0.63 | 0.50 | --- | 1.00 | 0.65 | 0.52 | --- | 1.00 | 0.70 | 0.57 | --- |
| | | ΔT | 19.34 | 17.45 | 13.91 | --- | 19.29 | 17.40 | 13.86 | --- | 19.56 | 17.66 | 14.12 | --- | 19.27 | 17.38 | 13.84 | --- | 19.02 | 17.12 | 13.59 | --- | 20.20 | 18.31 | 14.77 | --- |
| | | Pr Suc | 119.48 | 120.94 | 123.93 | --- | 126.65 | 128.10 | 131.10 | --- | 132.92 | 134.38 | 137.37 | --- | 138.22 | 139.68 | 142.68 | --- | 143.43 | 144.89 | 147.88 | --- | 149.95 | 151.41 | 154.40 | --- |
| | | Pr Dis | 273.41 | 274.59 | 276.50 | --- | 316.19 | 317.37 | 319.28 | --- | 361.01 | 362.19 | 364.10 | --- | 409.27 | 410.45 | 412.36 | --- | 461.31 | 462.48 | 464.39 | --- | 516.83 | 518.01 | 519.92 | --- |
| | | Amps | 10.57 | 10.56 | 10.53 | --- | 12.16 | 12.15 | 12.12 | --- | 13.93 | 13.91 | 13.89 | --- | 15.84 | 15.83 | 15.80 | --- | 17.98 | 17.97 | 17.94 | --- | 20.49 | 20.48 | 20.45 | --- |
| | | Power | 2,697 | 2,694 | 2,688 | --- | 3,061 | 3,058 | 3,052 | --- | 3,468 | 3,465 | 3,459 | --- | 3,908 | 3,906 | 3,899 | --- | 4,400 | 4,397 | 4,391 | --- | 4,977 | 4,975 | 4,968 | --- |
| | 1520 | MBh | 46,960 | 47,606 | 48,974 | --- | 46,550 | 47,196 | 48,564 | --- | 45,354 | 46,001 | 47,369 | --- | 43,297 | 43,944 | 45,312 | --- | 40,784 | 41,430 | 42,798 | --- | 38,489 | 39,135 | 40,503 | --- |
| | | S/T | 0.68 | 0.61 | 0.47 | --- | 0.69 | 0.61 | 0.48 | --- | 0.71 | 0.64 | 0.51 | --- | 0.73 | 0.66 | 0.52 | --- | 1.00 | 0.68 | 0.55 | --- | 1.00 | 0.73 | 0.60 | --- |
| | | ΔT | 18.55 | 16.66 | 13.12 | --- | 18.50 | 16.60 | 13.07 | --- | 18.77 | 16.87 | 13.33 | --- | 18.48 | 16.58 | 13.05 | --- | 18.23 | 16.33 | 12.79 | --- | 19.41 | 17.52 | 13.98 | --- |
| | | Pr Suc | 121.02 | 122.47 | 125.47 | --- | 128.18 | 129.64 | 132.64 | --- | 134.46 | 135.91 | 138.91 | --- | 139.76 | 141.22 | 144.22 | --- | 144.97 | 146.42 | 149.42 | --- | 151.49 | 152.94 | 155.94 | --- |
| | | Pr Dis | 275.23 | 276.40 | 278.31 | --- | 318.01 | 319.18 | 321.09 | --- | 362.83 | 364.00 | 365.91 | --- | 411.09 | 412.26 | 414.17 | --- | 463.12 | 464.29 | 466.20 | --- | 518.65 | 519.82 | 521.73 | --- |
| | | Amps | 10.63 | 10.62 | 10.59 | --- | 12.21 | 12.20 | 12.18 | --- | 13.98 | 13.97 | 13.94 | --- | 15.90 | 15.89 | 15.86 | --- | 18.04 | 18.02 | 18.00 | --- | 20.55 | 20.53 | 20.51 | --- |
| | | Power | 2,710 | 2,707 | 2,701 | --- | 3,074 | 3,072 | 3,065 | --- | 3,481 | 3,478 | 3,472 | --- | 3,921 | 3,919 | 3,912 | --- | 4,413 | 4,410 | 4,404 | --- | 4,990 | 4,988 | 4,981 | --- |
| 75 | 1240 | MBh | 45,914 | 46,561 | 47,929 | 50,018 | 45,505 | 46,151 | 47,519 | 49,608 | 44,309 | 44,956 | 46,323 | 48,412 | 42,252 | 42,899 | 44,266 | 46,356 | 39,738 | 40,385 | 41,753 | 43,842 | 37,444 | 38,090 | 39,458 | 41,547 |
| | | S/T | 0.73 | 0.66 | 0.53 | 0.39 | 0.74 | 0.67 | 0.53 | 0.39 | 0.77 | 0.69 | 0.56 | 0.42 | 1.00 | 0.71 | 0.58 | 0.44 | 1.00 | 0.73 | 0.60 | 0.46 | 1.00 | 0.78 | 0.65 | 0.51 |
| | | ΔT | 24.42 | 22.52 | 18.99 | 15.32 | 24.37 | 22.47 | 18.94 | 15.27 | 24.63 | 22.74 | 19.20 | 15.54 | 24.35 | 22.45 | 18.92 | 15.25 | 24.09 | 22.20 | 18.66 | 15.00 | 25.28 | 23.39 | 19.85 | 16.18 |
| | | Pr Suc | 118.09 | 119.55 | 122.55 | 127.56 | 125.26 | 126.71 | 129.71 | 134.73 | 131.53 | 132.99 | 135.99 | 141.00 | 136.84 | 138.29 | 141.29 | 146.31 | 142.04 | 143.50 | 146.50 | 151.51 | 148.56 | 150.02 | 153.02 | 158.03 |
| | | Pr Dis | 271.80 | 272.97 | 274.88 | 279.60 | 314.58 | 315.75 | 317.66 | 322.39 | 359.40 | 360.57 | 362.48 | 367.20 | 407.66 | 408.83 | 410.74 | 415.46 | 459.69 | 460.86 | 462.77 | 467.50 | 515.22 | 516.39 | 518.30 | 523.03 |
| | | Amps | 10.50 | 10.49 | 10.46 | 10.58 | 12.08 | 12.07 | 12.04 | 12.16 | 13.85 | 13.84 | 13.81 | 13.93 | 15.77 | 15.75 | 15.73 | 15.85 | 17.90 | 17.89 | 17.86 | 17.99 | 20.41 | 20.40 | 20.37 | 20.49 |
| | | Power | 2,679 | 2,677 | 2,670 | 2,698 | 3,044 | 3,041 | 3,035 | 3,063 | 3,451 | 3,448 | 3,442 | 3,470 | 3,891 | 3,888 | 3,882 | 3,910 | 4,383 | 4,380 | 4,374 | 4,402 | 4,960 | 4,957 | 4,951 | 4,979 |
| | 1380 | MBh | 46,410 | 47,057 | 48,425 | 50,514 | 46,001 | 46,647 | 48,015 | 50,104 | 44,805 | 45,452 | 46,819 | 48,908 | 42,748 | **43,395** | 44,763 | 46,852 | 40,235 | 40,881 | 42,249 | 44,338 | 37,940 | 38,586 | 39,954 | 42,043 |
| | | S/T | 0.78 | 0.71 | 0.57 | 0.43 | 0.79 | 0.71 | 0.58 | 0.44 | 0.81 | 0.74 | 0.60 | 0.46 | 1.00 | **0.76** | 0.62 | 0.48 | 1.00 | 0.78 | 0.64 | 0.50 | 1.00 | 0.83 | 0.69 | 0.55 |
| | | ΔT | 23.51 | 21.61 | 18.08 | 14.41 | 23.46 | 21.56 | 18.02 | 14.36 | 23.72 | 21.83 | 18.29 | 14.63 | 23.44 | **21.54** | 18.01 | 14.34 | 23.18 | 21.29 | 17.75 | 14.09 | 24.37 | 22.48 | 18.94 | 15.27 |
| | | Pr Suc | 119.51 | 120.96 | 123.96 | 128.98 | 126.67 | 128.13 | 131.13 | 136.14 | 132.95 | 134.40 | 137.40 | 142.42 | 138.25 | **139.71** | 142.71 | 147.72 | 143.46 | 144.91 | 147.91 | 152.93 | 149.98 | 151.43 | 154.43 | 159.45 |
| | | Pr Dis | 273.65 | 274.83 | 276.74 | 281.46 | 316.43 | 317.61 | 319.52 | 324.24 | 361.25 | 362.43 | 364.34 | 369.06 | 409.51 | **410.69** | 412.60 | 417.32 | 461.55 | 462.72 | 464.63 | 469.35 | 517.07 | 518.25 | 520.16 | 524.88 |
| | | Amps | 10.56 | 10.55 | 10.52 | 10.64 | 12.15 | 12.14 | 12.11 | 12.23 | 13.92 | 13.90 | 13.88 | 14.00 | 15.83 | **15.82** | 15.79 | 15.91 | 17.97 | 17.96 | 17.93 | 18.05 | 20.48 | 20.47 | 20.44 | 20.56 |
| | | Power | 2,695 | 2,692 | 2,685 | 2,713 | 3,059 | 3,056 | 3,050 | 3,078 | 3,466 | 3,463 | 3,457 | 3,485 | 3,906 | **3,903** | 3,897 | 3,925 | 4,398 | 4,395 | 4,389 | 4,417 | 4,975 | 4,972 | 4,966 | 4,994 |
| | 1520 | MBh | 46,986 | 47,633 | 49,001 | 51,090 | 46,576 | 47,223 | 48,591 | 50,680 | 45,381 | 46,028 | 47,395 | 49,484 | 43,324 | 43,971 | 45,338 | 47,427 | 40,810 | 41,457 | 42,825 | 44,914 | 38,516 | 39,162 | 40,530 | 42,619 |
| | | S/T | 0.81 | 0.73 | 0.60 | 0.46 | 0.82 | 0.74 | 0.61 | 0.47 | 1.00 | 0.76 | 0.63 | 0.49 | 1.00 | 0.78 | 0.65 | 0.51 | 1.00 | 0.81 | 0.67 | 0.53 | 1.00 | 0.86 | 0.72 | 0.58 |
| | | ΔT | 22.72 | 20.82 | 17.28 | 13.62 | 22.66 | 20.77 | 17.23 | 13.57 | 22.93 | 21.04 | 17.50 | 13.83 | 22.65 | 20.75 | 17.21 | 13.55 | 22.39 | 20.50 | 16.96 | 13.29 | 23.58 | 21.68 | 18.15 | 14.48 |
| | | Pr Suc | 121.05 | 122.50 | 125.50 | 130.52 | 128.21 | 129.67 | 132.67 | 137.68 | 134.49 | 135.94 | 138.94 | 143.95 | 139.79 | 141.25 | 144.24 | 149.26 | 145.00 | 146.45 | 149.45 | 154.47 | 151.52 | 152.97 | 155.97 | 160.98 |
| | | Pr Dis | 275.47 | 276.64 | 278.55 | 283.27 | 318.25 | 319.42 | 321.33 | 326.05 | 363.07 | 364.24 | 366.15 | 370.87 | 411.33 | 412.50 | 414.41 | 419.13 | 463.36 | 464.53 | 466.44 | 471.17 | 518.89 | 520.06 | 521.97 | 526.69 |
| | | Amps | 10.62 | 10.61 | 10.58 | 10.70 | 12.20 | 12.19 | 12.16 | 12.29 | 13.97 | 13.96 | 13.93 | 14.05 | 15.89 | 15.87 | 15.85 | 15.97 | 18.03 | 18.01 | 17.99 | 18.11 | 20.54 | 20.52 | 20.50 | 20.62 |
| | | Power | 2,708 | 2,705 | 2,698 | 2,726 | 3,072 | 3,069 | 3,063 | 3,091 | 3,479 | 3,476 | 3,470 | 3,498 | 3,919 | 3,916 | 3,910 | 3,938 | 4,411 | 4,408 | 4,402 | 4,430 | 4,988 | 4,985 | 4,979 | 5,007 |

IDB*: Entering Indoor Dry Bulb Temperature

High and low pressures are measured at the liquid and suction service valves.

Shaded area reflects ACCA (TVA) conditions.

kW = Total system power

Amps = outdoor unit amps

# Expanded Cooling Data — DZ18VC0481A* / DV61PECD14A* (High Stage)

| | | | Outdoor Ambient Temperature | | | | | | | | | | | | | | | | | | | | | | | |
|---|---|---|---|---|---|---|---|---|---|---|---|---|---|---|---|---|---|---|---|---|---|---|---|---|---|---|
| | | | 65 | | | | 75 | | | | 85 | | | | 95 | | | | 105 | | | | 115 | | | |
| | | | Entering Indoor Wet Bulb Temperature | | | | | | | | | | | | | | | | | | | | | | | |
| ID DB | Air | ID WB | 59 | 63 | 67 | 71 | 59 | 63 | 67 | 71 | 59 | 63 | 67 | 71 | 59 | 63 | 67 | 71 | 59 | 63 | 67 | 71 | 59 | 63 | 67 | 71 |
| 80 | 1240 | MBh | 46,152 | 46,798 | 48,166 | 50,255 | 45,742 | 46,388 | 47,756 | 49,845 | 44,546 | 45,193 | 46,561 | 48,650 | 42,489 | 43,136 | 44,504 | 46,593 | 39,976 | 40,622 | 41,990 | 44,079 | 37,681 | 38,327 | 39,695 | 41,784 |
| | | S/T | 0.86 | 0.78 | 0.65 | 0.51 | 1.00 | 0.79 | 0.66 | 0.52 | 1.00 | 0.81 | 0.68 | 0.54 | 1.00 | 0.83 | 0.70 | 0.56 | 1.00 | 0.85 | 0.72 | 0.58 | 1.00 | 1.00 | 0.77 | 0.63 |
| | | ΔT | 28.61 | 26.72 | 23.18 | 19.52 | 28.56 | 26.67 | 23.13 | 19.46 | 28.83 | 26.93 | 23.40 | 19.73 | 28.54 | 26.65 | 23.11 | 19.44 | 28.29 | 26.39 | 22.86 | 19.19 | 29.48 | 27.58 | 24.04 | 20.38 |
| | | Pr Suc | 118.61 | 120.07 | 123.07 | 128.08 | 125.78 | 127.23 | 130.23 | 135.25 | 132.05 | 133.51 | 136.51 | 141.52 | 137.36 | 138.81 | 141.81 | 146.83 | 142.56 | 144.02 | 147.02 | 152.03 | 149.08 | 150.54 | 153.54 | 158.55 |
| | | Pr Dis | 272.30 | 273.47 | 275.38 | 280.10 | 315.08 | 316.25 | 318.16 | 322.88 | 359.90 | 361.07 | 362.98 | 367.70 | 408.16 | 409.33 | 411.24 | 415.96 | 460.19 | 461.36 | 463.27 | 468.00 | 515.72 | 516.89 | 518.80 | 523.52 |
| | | Amps | 10.51 | 10.49 | 10.47 | 10.59 | 12.09 | 12.08 | 12.05 | 12.17 | 13.86 | 13.85 | 13.82 | 13.94 | 15.77 | 15.76 | 15.73 | 15.86 | 17.91 | 17.90 | 17.87 | 17.99 | 20.42 | 20.41 | 20.38 | 20.50 |
| | | Power | 2,681 | 2,679 | 2,672 | 2,700 | 3,046 | 3,043 | 3,037 | 3,065 | 3,453 | 3,450 | 3,444 | 3,471 | 3,893 | 3,890 | 3,884 | 3,912 | 4,385 | 4,382 | 4,376 | 4,404 | 4,962 | 4,959 | 4,953 | 4,981 |
| | 1380 | MBh | 46,648 | 47,294 | 48,662 | 50,751 | 46,238 | 46,884 | 48,252 | 50,341 | 45,042 | 45,689 | 47,057 | 49,146 | 42,985 | 43,632 | **45,000** | 47,089 | 40,472 | 41,118 | 42,486 | 44,575 | 38,177 | 38,824 | 40,191 | 42,280 |
| | | S/T | 0.90 | 0.83 | 0.70 | 0.56 | 1.00 | 0.83 | 0.70 | 0.56 | 1.00 | 0.86 | 0.73 | 0.59 | 1.00 | 0.88 | **0.75** | 0.60 | 1.00 | 1.00 | 0.77 | 0.63 | 1.00 | 1.00 | 0.82 | 0.68 |
| | | ΔT | 27.70 | 25.81 | 22.27 | 18.61 | 27.65 | 25.76 | 22.22 | 18.55 | 27.92 | 26.02 | 22.49 | 18.82 | 27.63 | 25.74 | **22.20** | 18.53 | 27.38 | 25.48 | 21.95 | 18.28 | 28.56 | 26.67 | 23.13 | 19.47 |
| | | Pr Suc | 120.03 | 121.48 | 124.48 | 129.50 | 127.19 | 128.65 | 131.65 | 136.66 | 133.47 | 134.92 | 137.92 | 142.94 | 138.77 | 140.23 | **143.23** | 148.24 | 143.98 | 145.43 | 148.43 | 153.45 | 150.50 | 151.95 | 154.95 | 159.97 |
| | | Pr Dis | 274.15 | 275.33 | 277.23 | 281.96 | 316.93 | 318.11 | 320.02 | 324.74 | 361.75 | 362.93 | 364.83 | 369.56 | 410.01 | 411.19 | **413.09** | 417.82 | 462.04 | 463.22 | 465.13 | 469.85 | 517.57 | 518.75 | 520.66 | 525.38 |
| | | Amps | 10.57 | 10.56 | 10.53 | 10.65 | 12.16 | 12.14 | 12.12 | 12.24 | 13.92 | 13.91 | 13.89 | 14.01 | 15.84 | 15.83 | **15.80** | 15.92 | 17.98 | 17.97 | 17.94 | 18.06 | 20.49 | 20.47 | 20.45 | 20.57 |
| | | Power | 2,696 | 2,694 | 2,687 | 2,715 | 3,061 | 3,058 | 3,052 | 3,080 | 3,468 | 3,465 | 3,459 | 3,487 | 3,908 | 3,905 | **3,899** | 3,927 | 4,400 | 4,397 | 4,391 | 4,419 | 4,977 | 4,974 | 4,968 | 4,996 |
| | 1520 | MBh | 47,223 | 47,870 | 49,238 | 51,327 | 46,814 | 47,460 | 48,828 | 50,917 | 45,618 | 46,265 | 47,632 | 49,721 | 43,561 | 44,208 | 45,576 | 47,665 | 41,048 | 41,694 | 43,062 | 45,151 | 38,753 | 39,399 | 40,767 | 42,856 |
| | | S/T | 0.93 | 0.86 | 0.72 | 0.58 | 1.00 | 0.86 | 0.73 | 0.59 | 1.00 | 0.89 | 0.75 | 0.61 | 1.00 | 0.91 | 0.77 | 0.63 | 1.00 | 1.00 | 0.80 | 0.66 | 1.00 | 1.00 | 0.85 | 0.71 |
| | | ΔT | 26.91 | 25.02 | 21.48 | 17.81 | 26.86 | 24.96 | 21.43 | 17.76 | 27.13 | 25.23 | 21.69 | 18.03 | 26.84 | 24.94 | 21.41 | 17.74 | 26.59 | 24.69 | 21.15 | 17.49 | 27.77 | 25.88 | 22.34 | 18.68 |
| | | Pr Suc | 121.57 | 123.02 | 126.02 | 131.04 | 128.73 | 130.19 | 133.19 | 138.20 | 135.01 | 136.46 | 139.46 | 144.47 | 140.31 | 141.77 | 144.76 | 149.78 | 145.52 | 146.97 | 149.97 | 154.99 | 152.04 | 153.49 | 156.49 | 161.50 |
| | | Pr Dis | 275.96 | 277.14 | 279.05 | 283.77 | 318.75 | 319.92 | 321.83 | 326.55 | 363.56 | 364.74 | 366.65 | 371.37 | 411.82 | 413.00 | 414.91 | 419.63 | 463.86 | 465.03 | 466.94 | 471.67 | 519.39 | 520.56 | 522.47 | 527.19 |
| | | Amps | 10.63 | 10.62 | 10.59 | 10.71 | 12.21 | 12.20 | 12.17 | 12.29 | 13.98 | 13.97 | 13.94 | 14.06 | 15.90 | 15.88 | 15.86 | 15.98 | 18.03 | 18.02 | 17.99 | 18.12 | 20.54 | 20.53 | 20.50 | 20.63 |
| | | Power | 2,709 | 2,707 | 2,700 | 2,728 | 3,074 | 3,071 | 3,065 | 3,093 | 3,481 | 3,478 | 3,472 | 3,500 | 3,921 | 3,918 | 3,912 | 3,940 | 4,413 | 4,410 | 4,404 | 4,432 | 4,990 | 4,987 | 4,981 | 5,009 |
| 85 | 1240 | MBh | 46,923 | 47,570 | 48,937 | 51,026 | 46,513 | 47,160 | 48,527 | 50,616 | 45,318 | 45,964 | 47,332 | 49,421 | 43,261 | 43,907 | 45,275 | 47,364 | 40,747 | 41,394 | 42,761 | 44,850 | 38,452 | 39,099 | 40,467 | 42,556 |
| | | S/T | 1.00 | 0.88 | 0.75 | 0.61 | 1.00 | 0.89 | 0.76 | 0.62 | 1.00 | 0.91 | 0.78 | 0.64 | 1.00 | 1.00 | 0.80 | 0.66 | 1.00 | 1.00 | 0.82 | 0.68 | 1.00 | 1.00 | 0.87 | 0.73 |
| | | ΔT | 32.33 | 30.44 | 26.90 | 23.24 | 32.28 | 30.39 | 26.85 | 23.18 | 32.55 | 30.65 | 27.12 | 23.45 | 32.26 | 30.37 | 26.83 | 23.16 | 32.01 | 30.11 | 26.58 | 22.91 | 33.20 | 31.30 | 27.76 | 24.10 |
| | | Pr Suc | 120.38 | 121.83 | 124.83 | 129.85 | 127.54 | 129.00 | 132.00 | 137.01 | 133.82 | 135.27 | 138.27 | 143.29 | 139.12 | 140.58 | 143.58 | 148.59 | 144.33 | 145.78 | 148.78 | 153.80 | 150.85 | 152.30 | 155.30 | 160.32 |
| | | Pr Dis | 273.57 | 274.75 | 276.65 | 281.38 | 316.35 | 317.53 | 319.43 | 324.16 | 361.17 | 362.35 | 364.25 | 368.98 | 409.43 | 410.61 | 412.51 | 417.24 | 461.46 | 462.64 | 464.55 | 469.27 | 516.99 | 518.17 | 520.07 | 524.80 |
| | | Amps | 10.54 | 10.52 | 10.50 | 10.62 | 12.12 | 12.11 | 12.08 | 12.20 | 13.89 | 13.88 | 13.85 | 13.97 | 15.80 | 15.79 | 15.76 | 15.89 | 17.94 | 17.93 | 17.90 | 18.02 | 20.45 | 20.44 | 20.41 | 20.53 |
| | | Power | 2,688 | 2,686 | 2,679 | 2,707 | 3,053 | 3,050 | 3,044 | 3,072 | 3,460 | 3,457 | 3,451 | 3,478 | 3,900 | 3,897 | 3,891 | 3,919 | 4,392 | 4,389 | 4,383 | 4,411 | 4,969 | 4,966 | 4,960 | 4,988 |
| | 1380 | MBh | 47,419 | 48,066 | 49,433 | 51,522 | 47,009 | 47,656 | 49,023 | 51,113 | 45,814 | 46,460 | 47,828 | 49,917 | 43,757 | 44,404 | 45,771 | 47,860 | 41,243 | 41,890 | 43,257 | 45,347 | 38,948 | 39,595 | 40,963 | 43,052 |
| | | S/T | 1.00 | 0.93 | 0.79 | 0.65 | 1.00 | 0.93 | 0.80 | 0.66 | 1.00 | 1.00 | 0.83 | 0.69 | 1.00 | 1.00 | 0.84 | 0.70 | 1.00 | 1.00 | 0.87 | 0.73 | 1.00 | 1.00 | 0.92 | 0.78 |
| | | ΔT | 31.42 | 29.53 | 25.99 | 22.33 | 31.37 | 29.48 | 25.94 | 22.27 | 31.64 | 29.74 | 26.20 | 22.54 | 31.35 | 29.46 | 25.92 | 22.25 | 31.10 | 29.20 | 25.67 | 22.00 | 32.28 | 30.39 | 26.85 | 23.19 |
| | | Pr Suc | 121.80 | 123.25 | 126.25 | 131.26 | 128.96 | 130.41 | 133.41 | 138.43 | 135.23 | 136.69 | 139.69 | 144.70 | 140.54 | 141.99 | 144.99 | 150.01 | 145.75 | 147.20 | 150.20 | 155.21 | 152.26 | 153.72 | 156.72 | 161.73 |
| | | Pr Dis | 275.43 | 276.60 | 278.51 | 283.24 | 318.21 | 319.38 | 321.29 | 326.02 | 363.03 | 364.20 | 366.11 | 370.84 | 411.29 | 412.46 | 414.37 | 419.10 | 463.32 | 464.50 | 466.40 | 471.13 | 518.85 | 520.02 | 521.93 | 526.66 |
| | | Amps | 10.60 | 10.59 | 10.56 | 10.68 | 12.19 | 12.17 | 12.15 | 12.27 | 13.96 | 13.94 | 13.92 | 14.04 | 15.87 | 15.86 | 15.83 | 15.95 | 18.01 | 18.00 | 17.97 | 18.09 | 20.52 | 20.50 | 20.48 | 20.60 |
| | | Power | 2,703 | 2,701 | 2,694 | 2,722 | 3,068 | 3,065 | 3,059 | 3,087 | 3,475 | 3,472 | 3,466 | 3,493 | 3,915 | 3,912 | 3,906 | 3,934 | 4,407 | 4,404 | 4,398 | 4,426 | 4,984 | 4,981 | 4,975 | 5,003 |
| | 1520 | MBh | 47,995 | 48,641 | 50,009 | 52,098 | 47,585 | 48,232 | 49,599 | 51,688 | 46,390 | 47,036 | 48,404 | 50,493 | 44,333 | 44,979 | 46,347 | 48,436 | 41,819 | 42,466 | 43,833 | 45,922 | 39,524 | 40,171 | 41,538 | 43,627 |
| | | S/T | 1.00 | 0.96 | 0.82 | 0.68 | 1.00 | 0.96 | 0.83 | 0.69 | 1.00 | 1.00 | 0.85 | 0.71 | 1.00 | 1.00 | 0.87 | 0.73 | 1.00 | 1.00 | 0.90 | 0.75 | 1.00 | 1.00 | 0.95 | 0.81 |
| | | ΔT | 30.63 | 28.74 | 25.20 | 21.53 | 30.58 | 28.68 | 25.15 | 21.48 | 30.85 | 28.95 | 25.41 | 21.75 | 30.56 | 28.66 | 25.13 | 21.46 | 30.31 | 28.41 | 24.87 | 21.21 | 31.49 | 29.60 | 26.06 | 22.39 |
| | | Pr Suc | 123.33 | 124.79 | 127.79 | 132.80 | 130.50 | 131.95 | 134.95 | 139.97 | 136.77 | 138.23 | 141.23 | 146.24 | 142.08 | 143.53 | 146.53 | 151.54 | 147.28 | 148.74 | 151.74 | 156.75 | 153.80 | 155.26 | 158.26 | 163.27 |
| | | Pr Dis | 277.24 | 278.42 | 280.32 | 285.05 | 320.02 | 321.20 | 323.10 | 327.83 | 364.84 | 366.02 | 367.92 | 372.65 | 413.10 | 414.28 | 416.18 | 420.91 | 465.13 | 466.31 | 468.21 | 472.94 | 520.66 | 521.84 | 523.74 | 528.47 |
| | | Amps | 10.66 | 10.65 | 10.62 | 10.74 | 12.24 | 12.23 | 12.20 | 12.32 | 14.01 | 14.00 | 13.97 | 14.09 | 15.93 | 15.91 | 15.89 | 16.01 | 18.06 | 18.05 | 18.03 | 18.15 | 20.57 | 20.56 | 20.53 | 20.66 |
| | | Power | 2,716 | 2,714 | 2,707 | 2,735 | 3,081 | 3,078 | 3,072 | 3,100 | 3,488 | 3,485 | 3,479 | 3,507 | 3,928 | 3,925 | 3,919 | 3,947 | 4,420 | 4,417 | 4,411 | 4,439 | 4,997 | 4,994 | 4,988 | 5,016 |

IDB*: Entering Indoor Dry Bulb Temperature

Shaded area reflects AHRI conditions.

kW = Total system power

High and low pressures are measured at the liquid and suction service valves.

Amps = outdoor unit amps

# Expanded Cooling Data — DZ18VC0481A* / DV61PECD14A* (Low Stage)

| | | | Outdoor Ambient Temperature | | | | | | | | | | | | | | | | | | | | | | | |
|---|---|---|---|---|---|---|---|---|---|---|---|---|---|---|---|---|---|---|---|---|---|---|---|---|---|---|
| | | | 65 | | | | 75 | | | | 85 | | | | 95 | | | | 105 | | | | 115 | | | |
| | | | Entering Indoor Wet Bulb Temperature | | | | | | | | | | | | | | | | | | | | | | | |
| ID DB | Air | ID WB | 59 | 63 | 67 | 71 | 59 | 63 | 67 | 71 | 59 | 63 | 67 | 71 | 59 | 63 | 67 | 71 | 59 | 63 | 67 | 71 | 59 | 63 | 67 | 71 |
| 70 | 970 | MBh | 32,992 | 33,457 | 34,440 | --- | 32,697 | 33,162 | 34,146 | --- | 31,838 | 32,303 | 33,286 | --- | 30,359 | 30,824 | 31,807 | --- | 28,551 | 29,016 | 30,000 | --- | 26,901 | 27,366 | 28,350 | --- |
| | | S/T | 0.62 | 0.55 | 0.41 | --- | 0.63 | 0.55 | 0.42 | --- | 0.66 | 0.58 | 0.44 | --- | 0.68 | 0.60 | 0.46 | --- | 1.00 | 0.62 | 0.48 | --- | 1.00 | 0.67 | 0.54 | --- |
| | | ΔT | 19.55 | 17.72 | 14.31 | --- | 19.50 | 17.67 | 14.26 | --- | 19.76 | 17.93 | 14.51 | --- | 19.48 | 17.65 | 14.24 | --- | 19.24 | 17.41 | 13.99 | --- | 20.38 | 18.55 | 15.14 | --- |
| | | Pr Suc | 121.37 | 122.86 | 125.94 | --- | 128.73 | 130.23 | 133.31 | --- | 135.18 | 136.68 | 139.76 | --- | 140.63 | 142.13 | 145.21 | --- | 145.99 | 147.48 | 150.56 | --- | 152.69 | 154.18 | 157.27 | --- |
| | | Pr Dis | 259.60 | 260.73 | 262.55 | --- | 300.50 | 301.62 | 303.45 | --- | 343.35 | 344.47 | 346.29 | --- | 389.48 | 390.61 | 392.43 | --- | 439.23 | 440.35 | 442.17 | --- | 492.31 | 493.44 | 495.26 | --- |
| | | Amps | 6.61 | 6.60 | 6.58 | --- | 7.61 | 7.60 | 7.58 | --- | 8.72 | 8.71 | 8.69 | --- | 9.92 | 9.91 | 9.90 | --- | 11.27 | 11.26 | 11.24 | --- | 12.85 | 12.84 | 12.82 | --- |
| | | Power | 1,687 | 1,685 | 1,681 | --- | 1,916 | 1,914 | 1,910 | --- | 2,172 | 2,170 | 2,166 | --- | 2,449 | 2,447 | 2,443 | --- | 2,758 | 2,757 | 2,753 | --- | 3,121 | 3,120 | 3,116 | --- |
| | 1080 | MBh | 33,350 | 33,815 | 34,798 | --- | 33,055 | 33,520 | 34,504 | --- | 32,196 | 32,661 | 33,644 | --- | 30,717 | 31,182 | 32,165 | --- | 28,909 | 29,374 | 30,358 | --- | 27,259 | 27,724 | 28,708 | --- |
| | | S/T | 0.67 | 0.59 | 0.46 | --- | 0.68 | 0.60 | 0.46 | --- | 0.70 | 0.63 | 0.49 | --- | 0.72 | 0.65 | 0.51 | --- | 1.00 | 0.67 | 0.53 | --- | 1.00 | 0.72 | 0.58 | --- |
| | | ΔT | 18.67 | 16.84 | 13.42 | --- | 18.62 | 16.79 | 13.37 | --- | 18.87 | 17.04 | 13.63 | --- | 18.60 | 16.77 | 13.35 | --- | 18.35 | 16.52 | 13.11 | --- | 19.50 | 17.67 | 14.26 | --- |
| | | Pr Suc | 122.83 | 124.32 | 127.40 | --- | 130.19 | 131.69 | 134.77 | --- | 136.64 | 138.14 | 141.22 | --- | 142.10 | 143.59 | 146.67 | --- | 147.45 | 148.94 | 152.03 | --- | 154.15 | 155.64 | 158.73 | --- |
| | | Pr Dis | 261.38 | 262.51 | 264.33 | --- | 302.28 | 303.41 | 305.23 | --- | 345.13 | 346.25 | 348.08 | --- | 391.27 | 392.39 | 394.21 | --- | 441.01 | 442.13 | 443.96 | --- | 494.09 | 495.22 | 497.04 | --- |
| | | Amps | 6.65 | 6.64 | 6.63 | --- | 7.65 | 7.64 | 7.62 | --- | 8.76 | 8.75 | 8.74 | --- | 9.96 | 9.96 | 9.94 | --- | 11.31 | 11.30 | 11.28 | --- | 12.89 | 12.88 | 12.86 | --- |
| | | Power | 1,696 | 1,695 | 1,691 | --- | 1,926 | 1,924 | 1,920 | --- | 2,181 | 2,180 | 2,176 | --- | 2,458 | 2,457 | 2,453 | --- | 2,768 | 2,766 | 2,762 | --- | 3,131 | 3,129 | 3,125 | --- |
| | 1190 | MBh | 33,766 | 34,231 | 35,214 | --- | 33,471 | 33,936 | 34,919 | --- | 32,611 | 33,076 | 34,060 | --- | 31,133 | 31,598 | 32,581 | --- | 29,325 | 29,790 | 30,774 | --- | 27,675 | 28,140 | 29,124 | --- |
| | | S/T | 0.70 | 0.62 | 0.49 | --- | 0.71 | 0.63 | 0.49 | --- | 0.73 | 0.66 | 0.52 | --- | 1.00 | 0.68 | 0.54 | --- | 1.00 | 0.70 | 0.56 | --- | 1.00 | 0.75 | 0.61 | --- |
| | | ΔT | 17.90 | 16.07 | 12.66 | --- | 17.85 | 16.02 | 12.61 | --- | 18.11 | 16.28 | 12.86 | --- | 17.83 | 16.00 | 12.59 | --- | 17.59 | 15.76 | 12.34 | --- | 18.73 | 16.90 | 13.49 | --- |
| | | Pr Suc | 124.41 | 125.91 | 128.99 | --- | 131.78 | 133.28 | 136.36 | --- | 138.23 | 139.73 | 142.81 | --- | 143.68 | 145.18 | 148.26 | --- | 149.04 | 150.53 | 153.61 | --- | 155.74 | 157.23 | 160.31 | --- |
| | | Pr Dis | 263.12 | 264.25 | 266.07 | --- | 304.02 | 305.15 | 306.97 | --- | 346.87 | 347.99 | 349.81 | --- | 393.01 | 394.13 | 395.95 | --- | 442.75 | 443.87 | 445.70 | --- | 495.83 | 496.96 | 498.78 | --- |
| | | Amps | 6.69 | 6.68 | 6.66 | --- | 7.68 | 7.68 | 7.66 | --- | 8.80 | 8.79 | 8.77 | --- | 10.00 | 9.99 | 9.97 | --- | 11.35 | 11.34 | 11.32 | --- | 12.92 | 12.92 | 12.90 | --- |
| | | Power | 1,705 | 1,703 | 1,699 | --- | 1,934 | 1,932 | 1,928 | --- | 2,190 | 2,188 | 2,184 | --- | 2,467 | 2,465 | 2,461 | --- | 2,776 | 2,774 | 2,770 | --- | 3,139 | 3,137 | 3,133 | --- |
| 75 | 970 | MBh | 33,011 | 33,476 | 34,459 | 35,961 | 32,716 | 33,181 | 34,165 | 35,667 | 31,857 | 32,322 | 33,305 | 34,807 | 30,378 | 30,843 | 31,826 | 33,328 | 28,571 | 29,036 | 30,019 | 31,521 | 26,921 | 27,386 | 28,369 | 29,871 |
| | | S/T | 0.75 | 0.68 | 0.54 | 0.40 | 0.76 | 0.68 | 0.55 | 0.40 | 1.00 | 0.71 | 0.57 | 0.43 | 1.00 | 0.73 | 0.59 | 0.45 | 1.00 | 0.75 | 0.61 | 0.47 | 1.00 | 0.80 | 0.67 | 0.52 |
| | | ΔT | 23.57 | 21.74 | 18.33 | 14.79 | 23.52 | 21.69 | 18.28 | 14.74 | 23.78 | 21.95 | 18.53 | 15.00 | 23.50 | 21.67 | 18.26 | 14.72 | 23.26 | 21.43 | 18.01 | 14.48 | 24.40 | 22.57 | 19.16 | 15.62 |
| | | Pr Suc | 121.40 | 122.89 | 125.97 | 131.13 | 128.76 | 130.26 | 133.34 | 138.49 | 135.21 | 136.71 | 139.79 | 144.94 | 140.66 | 142.16 | 145.24 | 150.40 | 146.02 | 147.51 | 150.59 | 155.75 | 152.72 | 154.21 | 157.30 | 162.45 |
| | | Pr Dis | 259.83 | 260.95 | 262.78 | 267.29 | 300.73 | 301.85 | 303.68 | 308.19 | 343.58 | 344.70 | 346.52 | 351.04 | 389.71 | 390.84 | 392.66 | 397.18 | 439.46 | 440.58 | 442.40 | 446.92 | 492.54 | 493.66 | 495.49 | 500.00 |
| | | Amps | 6.60 | 6.60 | 6.58 | 6.65 | 7.60 | 7.59 | 7.57 | 7.65 | 8.71 | 8.70 | 8.69 | 8.76 | 9.92 | 9.91 | 9.89 | 9.97 | 11.26 | 11.25 | 11.24 | 11.31 | 12.84 | 12.83 | 12.81 | 12.89 |
| | | Power | 1,685 | 1,684 | 1,680 | 1,697 | 1,915 | 1,913 | 1,909 | 1,926 | 2,170 | 2,169 | 2,165 | 2,182 | 2,447 | 2,446 | 2,442 | 2,459 | 2,757 | 2,755 | 2,751 | 2,769 | 3,120 | 3,118 | 3,114 | 3,132 |
| | 1080 | MBh | 33,369 | 33,834 | 34,817 | 36,319 | 33,074 | 33,539 | 34,523 | 36,025 | 32,215 | 32,680 | 33,663 | 35,165 | 30,736 | **31,201** | 32,184 | 33,686 | 28,929 | 29,394 | 30,377 | 31,879 | 27,279 | 27,744 | 28,727 | 30,229 |
| | | S/T | 0.80 | 0.72 | 0.59 | 0.44 | 0.81 | 0.73 | 0.59 | 0.45 | 1.00 | 0.76 | 0.62 | 0.48 | 1.00 | **0.78** | 0.64 | 0.49 | 1.00 | 0.80 | 0.66 | 0.52 | 1.00 | 1.00 | 0.71 | 0.57 |
| | | ΔT | 22.69 | 20.86 | 17.44 | 13.91 | 22.64 | 20.81 | 17.39 | 13.86 | 22.89 | 21.06 | 17.65 | 14.11 | 22.62 | **20.79** | 17.37 | 13.84 | 22.37 | 20.54 | 17.13 | 13.59 | 23.52 | 21.69 | 18.28 | 14.74 |
| | | Pr Suc | 122.86 | 124.35 | 127.43 | 132.59 | 130.22 | 131.72 | 134.80 | 139.95 | 136.67 | 138.17 | 141.25 | 146.40 | 142.12 | **143.62** | 146.70 | 151.86 | 147.48 | 148.97 | 152.05 | 157.21 | 154.18 | 155.67 | 158.76 | 163.91 |
| | | Pr Dis | 261.61 | 262.74 | 264.56 | 269.08 | 302.51 | 303.64 | 305.46 | 309.98 | 345.36 | 346.48 | 348.30 | 352.82 | 391.49 | **392.62** | 394.44 | 398.96 | 441.24 | 442.36 | 444.18 | 448.70 | 494.32 | 495.45 | 497.27 | 501.79 |
| | | Amps | 6.64 | 6.64 | 6.62 | 6.70 | 7.64 | 7.63 | 7.62 | 7.69 | 8.75 | 8.75 | 8.73 | 8.80 | 9.96 | **9.95** | 9.93 | 10.01 | 11.30 | 11.29 | 11.28 | 11.35 | 12.88 | 12.87 | 12.86 | 12.93 |
| | | Power | 1,695 | 1,693 | 1,689 | 1,707 | 1,924 | 1,922 | 1,918 | 1,936 | 2,180 | 2,178 | 2,174 | 2,192 | 2,457 | **2,455** | 2,451 | 2,469 | 2,766 | 2,765 | 2,761 | 2,778 | 3,129 | 3,128 | 3,124 | 3,141 |
| | 1190 | MBh | 33,785 | 34,250 | 35,233 | 36,735 | 33,490 | 33,955 | 34,938 | 36,441 | 32,631 | 33,096 | 34,079 | 35,581 | 31,152 | 31,617 | 32,600 | 34,102 | 29,344 | 29,809 | 30,793 | 32,295 | 27,694 | 28,159 | 29,143 | 30,645 |
| | | S/T | 0.83 | 0.75 | 0.62 | 0.47 | 0.84 | 0.76 | 0.62 | 0.48 | 1.00 | 0.79 | 0.65 | 0.50 | 1.00 | 0.81 | 0.67 | 0.52 | 1.00 | 0.83 | 0.69 | 0.55 | 1.00 | 1.00 | 0.74 | 0.60 |
| | | ΔT | 21.92 | 20.09 | 16.68 | 13.14 | 21.87 | 20.04 | 16.63 | 13.09 | 22.13 | 20.30 | 16.88 | 13.35 | 21.85 | 20.02 | 16.61 | 13.07 | 21.61 | 19.78 | 16.36 | 12.83 | 22.75 | 20.92 | 17.51 | 13.97 |
| | | Pr Suc | 124.44 | 125.94 | 129.02 | 134.18 | 131.81 | 133.30 | 136.39 | 141.54 | 138.26 | 139.75 | 142.84 | 147.99 | 143.71 | 145.21 | 148.29 | 153.44 | 149.06 | 150.56 | 153.64 | 158.80 | 155.77 | 157.26 | 160.34 | 165.50 |
| | | Pr Dis | 263.35 | 264.48 | 266.30 | 270.82 | 304.25 | 305.37 | 307.20 | 311.72 | 347.10 | 348.22 | 350.04 | 354.56 | 393.23 | 394.36 | 396.18 | 400.70 | 442.98 | 444.10 | 445.92 | 450.44 | 496.06 | 497.19 | 499.01 | 503.53 |
| | | Amps | 6.68 | 6.67 | 6.66 | 6.73 | 7.68 | 7.67 | 7.65 | 7.73 | 8.79 | 8.78 | 8.76 | 8.84 | 9.99 | 9.99 | 9.97 | 10.04 | 11.34 | 11.33 | 11.31 | 11.39 | 12.92 | 12.91 | 12.89 | 12.97 |
| | | Power | 1,703 | 1,701 | 1,697 | 1,715 | 1,932 | 1,931 | 1,927 | 1,944 | 2,188 | 2,186 | 2,183 | 2,200 | 2,465 | 2,463 | 2,459 | 2,477 | 2,775 | 2,773 | 2,769 | 2,786 | 3,138 | 3,136 | 3,132 | 3,149 |

IDB*: Entering Indoor Dry Bulb Temperature

High and low pressures are measured at the liquid and suction service valves.

Shaded area reflects ACCA (TVA) conditions.

kW = Total system power

Amps = outdoor unit amps

## Expanded Cooling Data — DZ18VC0481A* / DV61PECD14A* (Low Stage)

| | | | Outdoor Ambient Temperature | | | | | | | | | | | | | | | | | | | | | | | |
|---|---|---|---|---|---|---|---|---|---|---|---|---|---|---|---|---|---|---|---|---|---|---|---|---|---|---|
| | | | 65 | | | | 75 | | | | 85 | | | | 95 | | | | 105 | | | | 115 | | | |
| | | | Entering Indoor Wet Bulb Temperature | | | | | | | | | | | | | | | | | | | | | | | |
| ID DB | Air | ID WB | 59 | 63 | 67 | 71 | 59 | 63 | 67 | 71 | 59 | 63 | 67 | 71 | 59 | 63 | 67 | 71 | 59 | 63 | 67 | 71 | 59 | 63 | 67 | 71 |
| 80 | 970 | MBh | 33,182 | 33,647 | 34,630 | 36,132 | 32,887 | 33,352 | 34,335 | 35,837 | 32,027 | 32,492 | 33,476 | 34,978 | 30,549 | 31,013 | 31,997 | 33,499 | 28,741 | 29,206 | 30,189 | 31,692 | 27,091 | 27,556 | 28,539 | 30,042 |
| | | S/T | 0.88 | 0.80 | 0.67 | 0.52 | 1.00 | 0.81 | 0.67 | 0.53 | 1.00 | 0.84 | 0.70 | 0.55 | 1.00 | 0.85 | 0.72 | 0.57 | 1.00 | 1.00 | 0.74 | 0.60 | 1.00 | 1.00 | 0.79 | 0.65 |
| | | ΔT | 27.62 | 25.79 | 22.37 | 18.84 | 27.57 | 25.74 | 22.32 | 18.79 | 27.82 | 25.99 | 22.58 | 19.04 | 27.55 | 25.72 | 22.30 | 18.77 | 27.30 | 25.47 | 22.06 | 18.52 | 28.45 | 26.62 | 23.21 | 19.67 |
| | | Pr Suc | 121.93 | 123.43 | 126.51 | 131.66 | 129.29 | 130.79 | 133.87 | 139.03 | 135.75 | 137.24 | 140.32 | 145.48 | 141.20 | 142.69 | 145.78 | 150.93 | 146.55 | 148.05 | 151.13 | 156.28 | 153.25 | 154.75 | 157.83 | 162.99 |
| | | Pr Dis | 260.31 | 261.43 | 263.25 | 267.77 | 301.21 | 302.33 | 304.15 | 308.67 | 344.05 | 345.18 | 347.00 | 351.52 | 390.19 | 391.31 | 393.14 | 397.65 | 439.93 | 441.06 | 442.88 | 447.40 | 493.02 | 494.14 | 495.96 | 500.48 |
| | | Amps | 6.61 | 6.60 | 6.58 | 6.66 | 7.60 | 7.60 | 7.58 | 7.66 | 8.72 | 8.71 | 8.69 | 8.77 | 9.92 | 9.91 | 9.90 | 9.97 | 11.27 | 11.26 | 11.24 | 11.32 | 12.84 | 12.84 | 12.82 | 12.90 |
| | | Power | 1,687 | 1,685 | 1,681 | 1,698 | 1,916 | 1,914 | 1,910 | 1,928 | 2,172 | 2,170 | 2,166 | 2,184 | 2,449 | 2,447 | 2,443 | 2,460 | 2,758 | 2,756 | 2,752 | 2,770 | 3,121 | 3,119 | 3,115 | 3,133 |
| | 1080 | MBh | 33,540 | 34,005 | 34,988 | 36,490 | 33,245 | 33,710 | 34,693 | 36,195 | 32,385 | 32,850 | 33,834 | 35,336 | 30,907 | 31,371 | **32,355** | 33,857 | 29,099 | 29,564 | 30,547 | 32,049 | 27,449 | 27,914 | 28,897 | 30,400 |
| | | S/T | 1.00 | 0.85 | 0.71 | 0.57 | 1.00 | 0.86 | 0.72 | 0.58 | 1.00 | 0.88 | 0.75 | 0.60 | 1.00 | 0.90 | **0.77** | 0.62 | 1.00 | 1.00 | 0.79 | 0.64 | 1.00 | 1.00 | 0.84 | 0.70 |
| | | ΔT | 26.73 | 24.90 | 21.49 | 17.95 | 26.68 | 24.85 | 21.44 | 17.90 | 26.94 | 25.11 | 21.70 | 18.16 | 26.66 | 24.84 | **21.42** | 17.89 | 26.42 | 24.59 | 21.18 | 17.64 | 27.57 | 25.74 | 22.32 | 18.79 |
| | | Pr Suc | 123.39 | 124.89 | 127.97 | 133.12 | 130.76 | 132.25 | 135.33 | 140.49 | 137.21 | 138.70 | 141.78 | 146.94 | 142.66 | 144.15 | **147.24** | 152.39 | 148.01 | 149.51 | 152.59 | 157.74 | 154.71 | 156.21 | 159.29 | 164.45 |
| | | Pr Dis | 262.09 | 263.21 | 265.04 | 269.55 | 302.99 | 304.11 | 305.93 | 310.45 | 345.83 | 346.96 | 348.78 | 353.30 | 391.97 | 393.10 | **394.92** | 399.44 | 441.71 | 442.84 | 444.66 | 449.18 | 494.80 | 495.92 | 497.75 | 502.26 |
| | | Amps | 6.65 | 6.64 | 6.62 | 6.70 | 7.65 | 7.64 | 7.62 | 7.70 | 8.76 | 8.75 | 8.73 | 8.81 | 9.96 | 9.95 | **9.94** | 10.01 | 11.31 | 11.30 | 11.28 | 11.36 | 12.89 | 12.88 | 12.86 | 12.94 |
| | | Power | 1,696 | 1,694 | 1,690 | 1,708 | 1,925 | 1,924 | 1,920 | 1,937 | 2,181 | 2,179 | 2,175 | 2,193 | 2,458 | 2,456 | **2,452** | 2,470 | 2,768 | 2,766 | 2,762 | 2,779 | 3,131 | 3,129 | 3,125 | 3,142 |
| | 1190 | MBh | 33,955 | 34,420 | 35,404 | 36,906 | 33,661 | 34,126 | 35,109 | 36,611 | 32,801 | 33,266 | 34,249 | 35,751 | 31,322 | 31,787 | 32,771 | 34,273 | 29,515 | 29,980 | 30,963 | 32,465 | 27,865 | 28,330 | 29,313 | 30,815 |
| | | S/T | 1.00 | 0.88 | 0.74 | 0.60 | 1.00 | 0.89 | 0.75 | 0.61 | 1.00 | 0.91 | 0.78 | 0.63 | 1.00 | 1.00 | 0.80 | 0.65 | 1.00 | 1.00 | 0.82 | 0.67 | 1.00 | 1.00 | 0.87 | 0.73 |
| | | ΔT | 25.97 | 24.14 | 20.72 | 17.19 | 25.92 | 24.09 | 20.67 | 17.14 | 26.17 | 24.34 | 20.93 | 17.39 | 25.90 | 24.07 | 20.65 | 17.12 | 25.65 | 23.82 | 20.41 | 16.87 | 26.80 | 24.97 | 21.56 | 18.02 |
| | | Pr Suc | 124.98 | 126.47 | 129.56 | 134.71 | 132.34 | 133.84 | 136.92 | 142.08 | 138.79 | 140.29 | 143.37 | 148.53 | 144.25 | 145.74 | 148.82 | 153.98 | 149.60 | 151.09 | 154.18 | 159.33 | 156.30 | 157.80 | 160.88 | 166.03 |
| | | Pr Dis | 263.83 | 264.95 | 266.78 | 271.29 | 304.73 | 305.85 | 307.67 | 312.19 | 347.57 | 348.70 | 350.52 | 355.04 | 393.71 | 394.84 | 396.66 | 401.18 | 443.45 | 444.58 | 446.40 | 450.92 | 496.54 | 497.66 | 499.49 | 504.00 |
| | | Amps | 6.69 | 6.68 | 6.66 | 6.74 | 7.68 | 7.67 | 7.66 | 7.73 | 8.79 | 8.79 | 8.77 | 8.85 | 10.00 | 9.99 | 9.97 | 10.05 | 11.34 | 11.34 | 11.32 | 11.40 | 12.92 | 12.91 | 12.90 | 12.97 |
| | | Power | 1,704 | 1,702 | 1,699 | 1,716 | 1,934 | 1,932 | 1,928 | 1,945 | 2,189 | 2,188 | 2,184 | 2,201 | 2,466 | 2,465 | 2,461 | 2,478 | 2,776 | 2,774 | 2,770 | 2,788 | 3,139 | 3,137 | 3,133 | 3,151 |
| 85 | 970 | MBh | 33,736 | 34,201 | 35,185 | 36,687 | 33,442 | 33,907 | 34,890 | 36,392 | 32,582 | 33,047 | 34,030 | 35,532 | 31,103 | 31,568 | 32,551 | 34,054 | 29,296 | 29,761 | 30,744 | 32,246 | 27,646 | 28,111 | 29,094 | 30,596 |
| | | S/T | 1.00 | 0.91 | 0.77 | 0.63 | 1.00 | 0.91 | 0.78 | 0.63 | 1.00 | 1.00 | 0.80 | 0.66 | 1.00 | 1.00 | 0.82 | 0.68 | 1.00 | 1.00 | 0.84 | 0.70 | 1.00 | 1.00 | 1.00 | 0.75 |
| | | ΔT | 31.21 | 29.38 | 25.96 | 22.43 | 31.16 | 29.33 | 25.91 | 22.38 | 31.41 | 29.58 | 26.17 | 22.63 | 31.14 | 29.31 | 25.89 | 22.36 | 30.89 | 29.06 | 25.65 | 22.11 | 32.04 | 30.21 | 26.79 | 23.26 |
| | | Pr Suc | 123.74 | 125.24 | 128.32 | 133.48 | 131.11 | 132.61 | 135.69 | 140.84 | 137.56 | 139.06 | 142.14 | 147.29 | 143.01 | 144.51 | 147.59 | 152.75 | 148.37 | 149.86 | 152.94 | 158.10 | 155.07 | 156.56 | 159.64 | 164.80 |
| | | Pr Dis | 261.53 | 262.65 | 264.47 | 268.99 | 302.42 | 303.55 | 305.37 | 309.89 | 345.27 | 346.40 | 348.22 | 352.74 | 391.41 | 392.53 | 394.36 | 398.87 | 441.15 | 442.28 | 444.10 | 448.62 | 494.24 | 495.36 | 497.18 | 501.70 |
| | | Amps | 6.63 | 6.62 | 6.60 | 6.68 | 7.62 | 7.62 | 7.60 | 7.68 | 8.74 | 8.73 | 8.71 | 8.79 | 9.94 | 9.93 | 9.92 | 9.99 | 11.29 | 11.28 | 11.26 | 11.34 | 12.86 | 12.86 | 12.84 | 12.92 |
| | | Power | 1,691 | 1,689 | 1,685 | 1,703 | 1,920 | 1,918 | 1,914 | 1,932 | 2,176 | 2,174 | 2,170 | 2,188 | 2,453 | 2,451 | 2,447 | 2,465 | 2,762 | 2,761 | 2,757 | 2,774 | 3,125 | 3,124 | 3,120 | 3,137 |
| | 1080 | MBh | 34,094 | 34,559 | 35,543 | 37,045 | 33,800 | 34,265 | 35,248 | 36,750 | 32,940 | 33,405 | 34,388 | 35,890 | 31,461 | 31,926 | 32,909 | 34,412 | 29,654 | 30,119 | 31,102 | 32,604 | 28,004 | 28,469 | 29,452 | 30,954 |
| | | S/T | 1.00 | 0.95 | 0.82 | 0.67 | 1.00 | 0.96 | 0.82 | 0.68 | 1.00 | 1.00 | 0.85 | 0.70 | 1.00 | 1.00 | 0.87 | 0.72 | 1.00 | 1.00 | 0.89 | 0.75 | 1.00 | 1.00 | 1.00 | 0.80 |
| | | ΔT | 30.32 | 28.49 | 25.08 | 21.54 | 30.27 | 28.44 | 25.03 | 21.49 | 30.53 | 28.70 | 25.29 | 21.75 | 30.25 | 28.43 | 25.01 | 21.48 | 30.01 | 28.18 | 24.77 | 21.23 | 31.15 | 29.33 | 25.91 | 22.38 |
| | | Pr Suc | 125.21 | 126.70 | 129.78 | 134.94 | 132.57 | 134.07 | 137.15 | 142.30 | 139.02 | 140.52 | 143.60 | 148.75 | 144.47 | 145.97 | 149.05 | 154.21 | 149.83 | 151.32 | 154.40 | 159.56 | 156.53 | 158.02 | 161.11 | 166.26 |
| | | Pr Dis | 263.31 | 264.43 | 266.26 | 270.77 | 304.21 | 305.33 | 307.15 | 311.67 | 347.05 | 348.18 | 350.00 | 354.52 | 393.19 | 394.31 | 396.14 | 400.66 | 442.93 | 444.06 | 445.88 | 450.40 | 496.02 | 497.14 | 498.97 | 503.48 |
| | | Amps | 6.67 | 6.66 | 6.64 | 6.72 | 7.67 | 7.66 | 7.64 | 7.72 | 8.78 | 8.77 | 8.75 | 8.83 | 9.98 | 9.97 | 9.96 | 10.03 | 11.33 | 11.32 | 11.30 | 11.38 | 12.91 | 12.90 | 12.88 | 12.96 |
| | | Power | 1,700 | 1,699 | 1,695 | 1,712 | 1,930 | 1,928 | 1,924 | 1,942 | 2,186 | 2,184 | 2,180 | 2,197 | 2,463 | 2,461 | 2,457 | 2,474 | 2,772 | 2,770 | 2,766 | 2,784 | 3,135 | 3,133 | 3,129 | 3,147 |
| | 1190 | MBh | 34,510 | 34,975 | 35,958 | 37,460 | 34,215 | 34,680 | 35,664 | 37,166 | 33,356 | 33,821 | 34,804 | 36,306 | 31,877 | 32,342 | 33,325 | 34,827 | 30,070 | 30,535 | 31,518 | 33,020 | 28,420 | 28,885 | 29,868 | 31,370 |
| | | S/T | 1.00 | 0.98 | 0.85 | 0.70 | 1.00 | 1.00 | 0.85 | 0.71 | 1.00 | 1.00 | 0.88 | 0.73 | 1.00 | 1.00 | 0.90 | 0.75 | 1.00 | 1.00 | 0.92 | 0.78 | 1.00 | 1.00 | 1.00 | 0.83 |
| | | ΔT | 29.56 | 27.73 | 24.31 | 20.78 | 29.51 | 27.68 | 24.26 | 20.73 | 29.76 | 27.93 | 24.52 | 20.98 | 29.49 | 27.66 | 24.24 | 20.71 | 29.24 | 27.41 | 24.00 | 20.46 | 30.39 | 28.56 | 25.15 | 21.61 |
| | | Pr Suc | 126.79 | 128.29 | 131.37 | 136.53 | 134.16 | 135.65 | 138.74 | 143.89 | 140.61 | 142.10 | 145.19 | 150.34 | 146.06 | 147.56 | 150.64 | 155.79 | 151.41 | 152.91 | 155.99 | 161.15 | 158.12 | 159.61 | 162.69 | 167.85 |
| | | Pr Dis | 265.05 | 266.17 | 268.00 | 272.51 | 305.95 | 307.07 | 308.89 | 313.41 | 348.79 | 349.92 | 351.74 | 356.26 | 394.93 | 396.05 | 397.88 | 402.39 | 444.67 | 445.80 | 447.62 | 452.14 | 497.76 | 498.88 | 500.71 | 505.22 |
| | | Amps | 6.70 | 6.70 | 6.68 | 6.76 | 7.70 | 7.69 | 7.68 | 7.75 | 8.81 | 8.81 | 8.79 | 8.86 | 10.02 | 10.01 | 9.99 | 10.07 | 11.36 | 11.36 | 11.34 | 11.41 | 12.94 | 12.93 | 12.92 | 12.99 |
| | | Power | 1,709 | 1,707 | 1,703 | 1,720 | 1,938 | 1,936 | 1,932 | 1,950 | 2,194 | 2,192 | 2,188 | 2,206 | 2,471 | 2,469 | 2,465 | 2,483 | 2,780 | 2,778 | 2,774 | 2,792 | 3,143 | 3,141 | 3,137 | 3,155 |

IDB*: Entering Indoor Dry Bulb Temperature

Shaded area reflects AHRI conditions.

kW = Total system power

High and low pressures are measured at the liquid and suction service valves.

Amps = outdoor unit amps

## Expanded Cooling Data — DZ18VC0601A* / DV61PECD14A* (High Stage)

| | | | Outdoor Ambient Temperature | | | | | | | | | | | | | | | | | | | | | | | |
|---|---|---|---|---|---|---|---|---|---|---|---|---|---|---|---|---|---|---|---|---|---|---|---|---|---|---|
| | | | 65 | | | | 75 | | | | 85 | | | | 95 | | | | 105 | | | | 115 | | | |
| | | | Entering Indoor Wet Bulb Temperature | | | | | | | | | | | | | | | | | | | | | | | |
| ID DB | Air | ID WB | 59 | 63 | 67 | 71 | 59 | 63 | 67 | 71 | 59 | 63 | 67 | 71 | 59 | 63 | 67 | 71 | 59 | 63 | 67 | 71 | 59 | 63 | 67 | 71 |
| 70 | 1470 | MBh | 54,034 | 54,795 | 56,406 | --- | 53,551 | 54,313 | 55,923 | --- | 52,143 | 52,905 | 54,515 | --- | 49,720 | 50,482 | 52,093 | --- | 46,760 | 47,521 | 49,132 | --- | 44,057 | 44,819 | 46,429 | --- |
| | | S/T | 0.60 | 0.53 | 0.40 | --- | 0.61 | 0.54 | 0.40 | --- | 0.63 | 0.56 | 0.43 | --- | 0.65 | 0.58 | 0.45 | --- | 0.68 | 0.60 | 0.47 | --- | 1.00 | 0.65 | 0.52 | --- |
| | | ΔT | 20.0 | 18.2 | 14.7 | --- | 20.0 | 18.1 | 14.6 | --- | 20.2 | 18.4 | 14.9 | --- | 20.0 | 18.1 | 14.6 | --- | 19.7 | 17.8 | 14.3 | --- | 20.9 | 19.0 | 15.5 | --- |
| | | Pr Suc | 114.3 | 115.7 | 118.6 | --- | 121.2 | 122.6 | 125.5 | --- | 127.3 | 128.7 | 131.6 | --- | 132.4 | 133.8 | 136.7 | --- | 137.5 | 138.9 | 141.8 | --- | 143.8 | 145.2 | 148.1 | --- |
| | | Pr Dis | 255.4 | 256.5 | 258.3 | --- | 295.7 | 296.8 | 298.6 | --- | 337.8 | 339.0 | 340.7 | --- | 383.2 | 384.4 | 386.1 | --- | 432.2 | 433.3 | 435.1 | --- | 484.4 | 485.5 | 487.3 | --- |
| | | Amps | 12.5 | 12.4 | 12.4 | --- | 14.2 | 14.2 | 14.2 | --- | 16.2 | 16.2 | 16.2 | --- | 18.4 | 18.4 | 18.4 | --- | 20.8 | 20.8 | 20.8 | --- | 23.7 | 23.7 | 23.6 | --- |
| | | Power | 3,254 | 3,251 | 3,244 | --- | 3,666 | 3,663 | 3,656 | --- | 4,127 | 4,123 | 4,116 | --- | 4,625 | 4,621 | 4,614 | --- | 5,181 | 5,178 | 5,171 | --- | 5,834 | 5,830 | 5,823 | --- |
| | 1640 | MBh | 54,630 | 55,391 | 57,002 | --- | 54,147 | 54,909 | 56,519 | --- | 52,739 | 53,501 | 55,111 | --- | 50,317 | 51,078 | 52,689 | --- | 47,356 | 48,118 | 49,728 | --- | 44,653 | 45,415 | 47,026 | --- |
| | | S/T | 0.65 | 0.58 | 0.44 | --- | 0.66 | 0.58 | 0.45 | --- | 0.68 | 0.61 | 0.47 | --- | 0.70 | 0.63 | 0.49 | --- | 0.72 | 0.65 | 0.52 | --- | 1.00 | 0.70 | 0.57 | --- |
| | | ΔT | 19.1 | 17.2 | 13.7 | --- | 19.1 | 17.2 | 13.7 | --- | 19.3 | 17.4 | 14.0 | --- | 19.0 | 17.2 | 13.7 | --- | 18.8 | 16.9 | 13.4 | --- | 20.0 | 18.1 | 14.6 | --- |
| | | Pr Suc | 115.7 | 117.1 | 120.0 | --- | 122.6 | 124.0 | 126.9 | --- | 128.7 | 130.1 | 133.0 | --- | 133.8 | 135.2 | 138.1 | --- | 138.9 | 140.3 | 143.2 | --- | 145.2 | 146.6 | 149.5 | --- |
| | | Pr Dis | 257.2 | 258.3 | 260.1 | --- | 297.5 | 298.6 | 300.4 | --- | 339.6 | 340.7 | 342.5 | --- | 385.0 | 386.1 | 387.9 | --- | 434.0 | 435.1 | 436.9 | --- | 486.2 | 487.3 | 489.1 | --- |
| | | Amps | 12.5 | 12.5 | 12.5 | --- | 14.3 | 14.3 | 14.3 | --- | 16.3 | 16.3 | 16.3 | --- | 18.5 | 18.5 | 18.4 | --- | 20.9 | 20.9 | 20.9 | --- | 23.7 | 23.7 | 23.7 | --- |
| | | Power | 3,272 | 3,268 | 3,261 | --- | 3,684 | 3,681 | 3,674 | --- | 4,144 | 4,141 | 4,134 | --- | 4,642 | 4,639 | 4,632 | --- | 5,198 | 5,195 | 5,188 | --- | 5,851 | 5,848 | 5,841 | --- |
| | 1790 | MBh | 55,237 | 55,998 | 57,609 | --- | 54,754 | 55,515 | 57,126 | --- | 53,346 | 54,107 | 55,718 | --- | 50,923 | 51,685 | 53,296 | --- | 47,963 | 48,724 | 50,335 | --- | 45,260 | 46,022 | 47,632 | --- |
| | | S/T | 0.68 | 0.60 | 0.47 | --- | 0.68 | 0.61 | 0.48 | --- | 0.71 | 0.63 | 0.50 | --- | 0.73 | 0.65 | 0.52 | --- | 0.75 | 0.67 | 0.54 | --- | 1.00 | 0.72 | 0.59 | --- |
| | | ΔT | 18.4 | 16.5 | 13.0 | --- | 18.3 | 16.5 | 13.0 | --- | 18.6 | 16.7 | 13.2 | --- | 18.3 | 16.5 | 13.0 | --- | 18.1 | 16.2 | 12.7 | --- | 19.2 | 17.4 | 13.9 | --- |
| | | Pr Suc | 117.0 | 118.4 | 121.3 | --- | 123.9 | 125.4 | 128.3 | --- | 130.0 | 131.4 | 134.3 | --- | 135.2 | 136.6 | 139.5 | --- | 140.2 | 141.6 | 144.5 | --- | 146.5 | 147.9 | 150.8 | --- |
| | | Pr Dis | 258.8 | 259.9 | 261.7 | --- | 299.0 | 300.1 | 301.9 | --- | 341.2 | 342.3 | 344.1 | --- | 386.6 | 387.7 | 389.5 | --- | 435.5 | 436.6 | 438.4 | --- | 487.8 | 488.9 | 490.7 | --- |
| | | Amps | 12.6 | 12.6 | 12.5 | --- | 14.4 | 14.4 | 14.3 | --- | 16.4 | 16.4 | 16.3 | --- | 18.5 | 18.5 | 18.5 | --- | 21.0 | 21.0 | 20.9 | --- | 23.8 | 23.8 | 23.8 | --- |
| | | Power | 3,285 | 3,282 | 3,275 | --- | 3,697 | 3,694 | 3,687 | --- | 4,157 | 4,154 | 4,147 | --- | 4,655 | 4,652 | 4,645 | --- | 5,212 | 5,209 | 5,201 | --- | 5,864 | 5,861 | 5,854 | --- |
| 75 | 1470 | MBh | 54,065 | 54,827 | 56,437 | 58,898 | 53,582 | 54,344 | 55,955 | 58,415 | 52,174 | 52,936 | 54,547 | 57,007 | 49,752 | 50,514 | 52,124 | 54,585 | 46,791 | 47,553 | 49,164 | 51,624 | 44,089 | 44,850 | 46,461 | 48,921 |
| | | S/T | 0.73 | 0.66 | 0.52 | 0.38 | 0.74 | 0.66 | 0.53 | 0.39 | 0.76 | 0.69 | 0.55 | 0.41 | 0.78 | 0.71 | 0.57 | 0.43 | 1.00 | 0.73 | 0.59 | 0.45 | 1.00 | 0.78 | 0.64 | 0.51 |
| | | ΔT | 24.1 | 22.3 | 18.8 | 15.2 | 24.1 | 22.2 | 18.7 | 15.1 | 24.4 | 22.5 | 19.0 | 15.4 | 24.1 | 22.2 | 18.7 | 15.1 | 23.8 | 22.0 | 18.5 | 14.8 | 25.0 | 23.1 | 19.6 | 16.01 |
| | | Pr Suc | 114.3 | 115.7 | 118.6 | 123.5 | 121.2 | 122.6 | 125.5 | 130.4 | 127.3 | 128.7 | 131.6 | 136.5 | 132.4 | 133.9 | 136.8 | 141.6 | 137.5 | 138.9 | 141.8 | 146.7 | 143.8 | 145.2 | 148.1 | 152.96 |
| | | Pr Dis | 255.7 | 256.8 | 258.6 | 263.0 | 295.9 | 297.0 | 298.8 | 303.3 | 338.1 | 339.2 | 341.0 | 345.4 | 383.5 | 384.6 | 386.4 | 390.8 | 432.4 | 433.5 | 435.3 | 439.8 | 484.7 | 485.8 | 487.6 | 492.01 |
| | | Amps | 12.4 | 12.4 | 12.4 | 12.5 | 14.2 | 14.2 | 14.2 | 14.3 | 16.2 | 16.2 | 16.2 | 16.3 | 18.4 | 18.4 | 18.4 | 18.5 | 20.8 | 20.8 | 20.8 | 20.9 | 23.7 | 23.6 | 23.6 | 23.75 |
| | | Power | 3,252 | 3,248 | 3,241 | 3,273 | 3,664 | 3,661 | 3,653 | 3,685 | 4,124 | 4,121 | 4,114 | 4,145 | 4,622 | 4,619 | 4,612 | 4,643 | 5,178 | 5,175 | 5,168 | 5,200 | 5,831 | 5,828 | 5,821 | 5,852 |
| | 1640 | MBh | 54,661 | 55,423 | 57,034 | 59,494 | 54,179 | 54,940 | 56,551 | 59,011 | 52,770 | 53,532 | 55,143 | 57,603 | 50,348 | **51,110** | 52,720 | 55,181 | 47,387 | 48,149 | 49,760 | 52,220 | 44,685 | 45,446 | 47,057 | 49,517 |
| | | S/T | 0.78 | 0.70 | 0.57 | 0.43 | 0.78 | 0.71 | 0.58 | 0.44 | 0.81 | 0.73 | 0.60 | 0.46 | 1.00 | **0.75** | 0.62 | 0.48 | 1.00 | 0.77 | 0.64 | 0.50 | 1.00 | 0.82 | 0.69 | 0.55 |
| | | ΔT | 23.2 | 21.3 | 17.9 | 14.2 | 23.2 | 21.3 | 17.8 | 14.2 | 23.4 | 21.6 | 18.1 | 14.4 | 23.2 | **21.3** | 17.8 | 14.2 | 22.9 | 21.0 | 17.5 | 13.9 | 24.1 | 22.2 | 18.7 | 15.09 |
| | | Pr Suc | 115.7 | 117.1 | 120.0 | 124.9 | 122.6 | 124.0 | 126.9 | 131.8 | 128.7 | 130.1 | 133.0 | 137.9 | 133.8 | **135.3** | 138.2 | 143.0 | 138.9 | 140.3 | 143.2 | 148.1 | 145.2 | 146.6 | 149.5 | 154.36 |
| | | Pr Dis | 257.4 | 258.6 | 260.3 | 264.8 | 297.7 | 298.8 | 300.6 | 305.0 | 339.9 | 341.0 | 342.8 | 347.2 | 385.3 | **386.4** | 388.2 | 392.6 | 434.2 | 435.3 | 437.1 | 441.6 | 486.5 | 487.6 | 489.3 | 493.80 |
| | | Amps | 12.5 | 12.5 | 12.5 | 12.6 | 14.3 | 14.3 | 14.3 | 14.4 | 16.3 | 16.3 | 16.3 | 16.4 | 18.5 | **18.5** | 18.4 | 18.6 | 20.9 | 20.9 | 20.8 | 21.0 | 23.7 | 23.7 | 23.7 | 23.82 |
| | | Power | 3,269 | 3,266 | 3,259 | 3,290 | 3,681 | 3,678 | 3,671 | 3,702 | 4,141 | 4,138 | 4,131 | 4,163 | 4,639 | **4,636** | 4,629 | 4,661 | 5,196 | 5,192 | 5,185 | 5,217 | 5,848 | 5,845 | 5,838 | 5,870 |
| | 1790 | MBh | 55,268 | 56,030 | 57,640 | 60,101 | 54,785 | 55,547 | 57,158 | 59,618 | 53,377 | 54,139 | 55,750 | 58,210 | 50,955 | 51,716 | 53,327 | 55,788 | 47,994 | 48,756 | 50,367 | 52,827 | 45,291 | 46,053 | 47,664 | 50,124 |
| | | S/T | 0.80 | 0.73 | 0.60 | 0.46 | 0.81 | 0.74 | 0.60 | 0.46 | 0.83 | 0.76 | 0.63 | 0.49 | 1.00 | 0.78 | 0.65 | 0.51 | 1.00 | 0.80 | 0.67 | 0.53 | 1.00 | 0.85 | 0.72 | 0.58 |
| | | ΔT | 22.5 | 20.6 | 17.1 | 13.5 | 22.5 | 20.6 | 17.1 | 13.5 | 22.7 | 20.9 | 17.4 | 13.7 | 22.4 | 20.6 | 17.1 | 13.5 | 22.2 | 20.3 | 16.8 | 13.2 | 23.4 | 21.5 | 18.0 | 14.38 |
| | | Pr Suc | 117.0 | 118.4 | 121.3 | 126.2 | 124.0 | 125.4 | 128.3 | 133.1 | 130.0 | 131.5 | 134.4 | 139.2 | 135.2 | 136.6 | 139.5 | 144.3 | 140.2 | 141.6 | 144.5 | 149.4 | 146.5 | 147.9 | 150.8 | 155.70 |
| | | Pr Dis | 259.0 | 260.1 | 261.9 | 266.3 | 299.2 | 300.3 | 302.1 | 306.6 | 341.4 | 342.5 | 344.3 | 348.7 | 386.8 | 387.9 | 389.7 | 394.1 | 435.7 | 436.9 | 438.6 | 443.1 | 488.0 | 489.1 | 490.9 | 495.33 |
| | | Amps | 12.6 | 12.6 | 12.5 | 12.7 | 14.4 | 14.4 | 14.3 | 14.5 | 16.4 | 16.4 | 16.3 | 16.5 | 18.5 | 18.5 | 18.5 | 18.6 | 21.0 | 20.9 | 20.9 | 21.0 | 23.8 | 23.8 | 23.7 | 23.88 |
| | | Power | 3,282 | 3,279 | 3,272 | 3,304 | 3,695 | 3,691 | 3,684 | 3,716 | 4,155 | 4,151 | 4,144 | 4,176 | 4,653 | 4,649 | 4,642 | 4,674 | 5,209 | 5,206 | 5,199 | 5,230 | 5,862 | 5,859 | 5,852 | 5,883 |

IDB*: Entering Indoor Dry Bulb Temperature

Shaded area reflects ACCA (TVA) conditions.

kW = Total system power

High and low pressures are measured at the liquid and suction service valves.

Amps = outdoor unit amps

## Expanded Cooling Data — DZ18VC0601A* / DV61PECD14A* (High Stage)

| | | | Outdoor Ambient Temperature | | | | | | | | | | | | | | | | | | | | | | | |
|---|---|---|---|---|---|---|---|---|---|---|---|---|---|---|---|---|---|---|---|---|---|---|---|---|---|---|
| | | | 65 | | | | 75 | | | | 85 | | | | 95 | | | | 105 | | | | 115 | | | |
| | | | Entering Indoor Wet Bulb Temperature | | | | | | | | | | | | | | | | | | | | | | | |
| ID DB | Air | ID WB | 59 | 63 | 67 | 71 | 59 | 63 | 67 | 71 | 59 | 63 | 67 | 71 | 59 | 63 | 67 | 71 | 59 | 63 | 67 | 71 | 59 | 63 | 67 | 71 |
| 80 | 1470 | MBh | 54,344 | 55,106 | 56,717 | 59,177 | 53,862 | 54,623 | 56,234 | 58,695 | 52,454 | 53,215 | 54,826 | 57,287 | 50,031 | 50,793 | 52,404 | 54,864 | 47,071 | 47,832 | 49,443 | 51,903 | 44,368 | 45,129 | 46,740 | 49,201 |
| | | S/T | 0.85 | 0.78 | 0.65 | 0.51 | 0.86 | 0.78 | 0.65 | 0.51 | 1.00 | 0.81 | 0.68 | 0.54 | 1.00 | 0.83 | 0.70 | 0.56 | 1.00 | 0.85 | 0.72 | 0.58 | 1.00 | 1.00 | 0.77 | 0.63 |
| | | ΔT | 28.3 | 26.4 | 22.9 | 19.3 | 28.2 | 26.4 | 22.9 | 19.2 | 28.5 | 26.6 | 23.1 | 19.5 | 28.2 | 26.3 | 22.8 | 19.2 | 28.0 | 26.1 | 22.6 | 19.0 | 29.1 | 27.3 | 23.8 | 20.2 |
| | | Pr Suc | 114.8 | 116.2 | 119.1 | 124.0 | 121.7 | 123.1 | 126.0 | 130.9 | 127.8 | 129.2 | 132.1 | 137.0 | 132.9 | 134.4 | 137.3 | 142.1 | 138.0 | 139.4 | 142.3 | 147.2 | 144.3 | 145.7 | 148.6 | 153.5 |
| | | Pr Dis | 256.1 | 257.2 | 259.0 | 263.5 | 296.4 | 297.5 | 299.3 | 303.7 | 338.5 | 339.6 | 341.4 | 345.9 | 383.9 | 385.0 | 386.8 | 391.3 | 432.9 | 434.0 | 435.8 | 440.2 | 485.1 | 486.2 | 488.0 | 492.5 |
| | | Amps | 12.5 | 12.4 | 12.4 | 12.5 | 14.2 | 14.2 | 14.2 | 14.3 | 16.2 | 16.2 | 16.2 | 16.3 | 18.4 | 18.4 | 18.4 | 18.5 | 20.8 | 20.8 | 20.8 | 20.9 | 23.7 | 23.7 | 23.6 | 23.8 |
| | | Power | 3,254 | 3,250 | 3,243 | 3,275 | 3,666 | 3,663 | 3,656 | 3,687 | 4,126 | 4,123 | 4,116 | 4,147 | 4,624 | 4,621 | 4,614 | 4,645 | 5,180 | 5,177 | 5,170 | 5,202 | 5,833 | 5,830 | 5,823 | 5,854 |
| | 1640 | MBh | 54,941 | 55,702 | 57,313 | 59,773 | 54,458 | 55,219 | **56,830** | 59,291 | 53,050 | 53,811 | **55,422** | 57,883 | 50,627 | 51,389 | **53,000** | 55,460 | 47,667 | 48,428 | **50,039** | 52,500 | 44,964 | 45,726 | 47,336 | 49,797 |
| | | S/T | 0.90 | 0.83 | 0.69 | 0.55 | 1.00 | 0.83 | **0.70** | 0.56 | 1.00 | 0.86 | **0.72** | 0.58 | 1.00 | 0.87 | **0.74** | 0.60 | 1.00 | 0.90 | **0.76** | 0.62 | 1.00 | 1.00 | 0.81 | 0.67 |
| | | ΔT | 27.4 | 25.5 | 22.0 | 18.4 | 27.3 | 25.4 | **21.9** | 18.3 | 27.6 | 25.7 | **22.2** | 18.6 | 27.3 | 25.4 | **21.9** | 18.3 | 27.0 | 25.2 | **21.7** | 18.1 | 28.2 | 26.3 | 22.8 | 19.2 |
| | | Pr Suc | 116.2 | 117.6 | 120.5 | 125.4 | 123.1 | 124.5 | **127.4** | 132.3 | 129.2 | 130.6 | **133.5** | 138.4 | 134.3 | 135.8 | **138.7** | 143.5 | 139.4 | 140.8 | **143.7** | 148.6 | 145.7 | 147.1 | 150.0 | 154.9 |
| | | Pr Dis | 257.9 | 259.0 | 260.8 | 265.3 | 298.2 | 299.3 | **301.1** | 305.5 | 340.3 | 341.4 | **343.2** | 347.7 | 385.7 | 386.8 | **388.6** | 393.1 | 434.7 | 435.8 | **437.6** | 442.0 | 486.9 | 488.0 | 489.8 | 494.3 |
| | | Amps | 12.5 | 12.5 | 12.5 | 12.6 | 14.3 | 14.3 | **14.3** | 14.4 | 16.3 | 16.3 | **16.3** | 16.4 | 18.5 | 18.5 | **18.4** | 18.6 | 20.9 | 20.9 | **20.9** | 21.0 | 23.7 | 23.7 | 23.7 | 23.8 |
| | | Power | 3,271 | 3,268 | 3,261 | 3,292 | 3,683 | 3,680 | **3,673** | 3,705 | 4,144 | 4,140 | **4,133** | 4,165 | 4,641 | 4,638 | **4,631** | 4,663 | 5,198 | 5,195 | **5,188** | 5,219 | 5,851 | 5,847 | 5,840 | 5,872 |
| | 1790 | MBh | 55,547 | 56,309 | 57,920 | 60,380 | 55,065 | 55,826 | 57,437 | 59,897 | 53,657 | 54,418 | 56,029 | 58,489 | 51,234 | 51,996 | 53,606 | 56,067 | 48,274 | 49,035 | 50,646 | 53,106 | 45,571 | 46,332 | 47,943 | 50,404 |
| | | S/T | 0.93 | 0.85 | 0.72 | 0.58 | 1.00 | 0.86 | 0.73 | 0.59 | 1.00 | 0.88 | 0.75 | 0.61 | 1.00 | 0.90 | 0.77 | 0.63 | 1.00 | 0.92 | 0.79 | 0.65 | 1.00 | 1.00 | 0.84 | 0.70 |
| | | ΔT | 26.7 | 24.8 | 21.3 | 17.7 | 26.6 | 24.7 | 21.2 | 17.6 | 26.9 | 25.0 | 21.5 | 17.9 | 26.6 | 24.7 | 21.2 | 17.6 | 26.3 | 24.5 | 21.0 | 17.3 | 27.5 | 25.6 | 22.1 | 18.5 |
| | | Pr Suc | 117.5 | 118.9 | 121.8 | 126.7 | 124.5 | 125.9 | 128.8 | 133.6 | 130.5 | 132.0 | 134.9 | 139.7 | 135.7 | 137.1 | 140.0 | 144.8 | 140.7 | 142.1 | 145.0 | 149.9 | 147.0 | 148.4 | 151.3 | 156.2 |
| | | Pr Dis | 259.5 | 260.6 | 262.4 | 266.8 | 299.7 | 300.8 | 302.6 | 307.0 | 341.9 | 343.0 | 344.8 | 349.2 | 387.3 | 388.4 | 390.2 | 394.6 | 436.2 | 437.3 | 439.1 | 443.6 | 488.5 | 489.6 | 491.4 | 495.8 |
| | | Amps | 12.6 | 12.6 | 12.5 | 12.7 | 14.4 | 14.4 | 14.3 | 14.5 | 16.4 | 16.4 | 16.3 | 16.5 | 18.5 | 18.5 | 18.5 | 18.6 | 21.0 | 20.9 | 20.9 | 21.1 | 23.8 | 23.8 | 23.8 | 23.9 |
| | | Power | 3,285 | 3,281 | 3,274 | 3,306 | 3,697 | 3,693 | 3,686 | 3,718 | 4,157 | 4,154 | 4,147 | 4,178 | 4,655 | 4,652 | 4,645 | 4,676 | 5,211 | 5,208 | 5,201 | 5,232 | 5,864 | 5,861 | 5,854 | 5,885 |
| 85 | 1470 | MBh | 55,253 | 56,015 | 57,625 | 60,086 | 54,770 | 55,532 | 57,143 | 59,603 | 53,362 | 54,124 | 55,735 | 58,195 | 50,940 | 51,701 | 53,312 | 55,773 | 47,979 | 48,741 | 50,352 | 52,812 | 45,276 | 46,038 | 47,649 | 50,109 |
| | | S/T | 1.00 | 0.88 | 0.75 | 0.61 | 1.00 | 0.88 | 0.75 | 0.61 | 1.00 | 0.91 | 0.78 | 0.64 | 1.00 | 1.00 | 0.79 | 0.65 | 1.00 | 1.00 | 0.82 | 0.68 | 1.00 | 1.00 | 0.87 | 0.73 |
| | | ΔT | 32.0 | 30.1 | 26.6 | 23.0 | 31.9 | 30.0 | 26.5 | 22.9 | 32.2 | 30.3 | 26.8 | 23.2 | 31.9 | 30.0 | 26.5 | 22.9 | 31.6 | 29.8 | 26.3 | 22.7 | 32.8 | 30.9 | 27.4 | 23.8 |
| | | Pr Suc | 116.5 | 117.9 | 120.8 | 125.7 | 123.4 | 124.9 | 127.8 | 132.6 | 129.5 | 130.9 | 133.8 | 138.7 | 134.7 | 136.1 | 139.0 | 143.8 | 139.7 | 141.1 | 144.0 | 148.9 | 146.0 | 147.4 | 150.3 | 155.2 |
| | | Pr Dis | 257.3 | 258.4 | 260.2 | 264.7 | 297.6 | 298.7 | 300.5 | 304.9 | 339.7 | 340.8 | 342.6 | 347.1 | 385.1 | 386.2 | 388.0 | 392.5 | 434.1 | 435.2 | 437.0 | 441.4 | 486.3 | 487.4 | 489.2 | 493.7 |
| | | Amps | 12.5 | 12.5 | 12.4 | 12.6 | 14.3 | 14.3 | 14.2 | 14.4 | 16.3 | 16.3 | 16.2 | 16.4 | 18.4 | 18.4 | 18.4 | 18.5 | 20.9 | 20.8 | 20.8 | 21.0 | 23.7 | 23.7 | 23.7 | 23.8 |
| | | Power | 3,262 | 3,258 | 3,251 | 3,283 | 3,674 | 3,671 | 3,664 | 3,695 | 4,134 | 4,131 | 4,124 | 4,155 | 4,632 | 4,629 | 4,622 | 4,653 | 5,188 | 5,185 | 5,178 | 5,210 | 5,841 | 5,838 | 5,831 | 5,862 |
| | 1640 | MBh | 55,849 | 56,611 | 58,221 | 60,682 | 55,366 | 56,128 | 57,739 | 60,199 | 53,958 | 54,720 | 56,331 | 58,791 | 51,536 | 52,297 | 53,908 | 56,369 | 48,575 | 49,337 | 50,948 | 53,408 | 45,872 | 46,634 | 48,245 | 50,705 |
| | | S/T | 1.00 | 0.92 | 0.79 | 0.65 | 1.00 | 0.93 | 0.80 | 0.66 | 1.00 | 0.95 | 0.82 | 0.68 | 1.00 | 1.00 | 0.84 | 0.70 | 1.00 | 1.00 | 0.86 | 0.72 | 1.00 | 1.00 | 0.91 | 0.77 |
| | | ΔT | 31.0 | 29.2 | 25.7 | 22.1 | 31.0 | 29.1 | 25.6 | 22.0 | 31.3 | 29.4 | 25.9 | 22.3 | 31.0 | 29.1 | 25.6 | 22.0 | 30.7 | 28.8 | 25.4 | 21.7 | 31.9 | 30.0 | 26.5 | 22.9 |
| | | Pr Suc | 117.9 | 119.3 | 122.2 | 127.1 | 124.8 | 126.3 | 129.2 | 134.0 | 130.9 | 132.3 | 135.2 | 140.1 | 136.1 | 137.5 | 140.4 | 145.2 | 141.1 | 142.5 | 145.4 | 150.3 | 147.4 | 148.8 | 151.7 | 156.6 |
| | | Pr Dis | 259.1 | 260.2 | 262.0 | 266.5 | 299.4 | 300.5 | 302.3 | 306.7 | 341.5 | 342.6 | 344.4 | 348.9 | 386.9 | 388.0 | 389.8 | 394.3 | 435.9 | 437.0 | 438.8 | 443.2 | 488.1 | 489.2 | 491.0 | 495.5 |
| | | Amps | 12.6 | 12.5 | 12.5 | 12.7 | 14.4 | 14.3 | 14.3 | 14.4 | 16.4 | 16.3 | 16.3 | 16.4 | 18.5 | 18.5 | 18.5 | 18.6 | 20.9 | 20.9 | 20.9 | 21.0 | 23.8 | 23.8 | 23.7 | 23.9 |
| | | Power | 3,279 | 3,276 | 3,269 | 3,300 | 3,691 | 3,688 | 3,681 | 3,712 | 4,151 | 4,148 | 4,141 | 4,173 | 4,649 | 4,646 | 4,639 | 4,671 | 5,206 | 5,203 | 5,195 | 5,227 | 5,858 | 5,855 | 5,848 | 5,880 |
| | 1790 | MBh | 56,456 | 57,217 | 58,828 | 61,289 | 55,973 | 56,735 | 58,346 | 60,806 | 54,565 | 55,327 | 56,938 | 59,398 | 52,143 | 52,904 | 54,515 | 56,976 | 49,182 | 49,944 | 51,554 | 54,015 | 46,479 | 47,241 | 48,852 | 51,312 |
| | | S/T | 1.00 | 0.95 | 0.82 | 0.68 | 1.00 | 0.96 | 0.82 | 0.68 | 1.00 | 0.98 | 0.85 | 0.71 | 1.00 | 1.00 | 0.87 | 0.73 | 1.00 | 1.00 | 0.89 | 0.75 | 1.00 | 1.00 | 0.94 | 0.80 |
| | | ΔT | 30.3 | 28.5 | 25.0 | 21.3 | 30.3 | 28.4 | 24.9 | 21.3 | 30.5 | 28.7 | 25.2 | 21.6 | 30.3 | 28.4 | 24.9 | 21.3 | 30.0 | 28.1 | 24.6 | 21.0 | 31.2 | 29.3 | 25.8 | 22.2 |
| | | Pr Suc | 119.2 | 120.7 | 123.6 | 128.4 | 126.2 | 127.6 | 130.5 | 135.3 | 132.3 | 133.7 | 136.6 | 141.4 | 137.4 | 138.8 | 141.7 | 146.6 | 142.4 | 143.8 | 146.7 | 151.6 | 148.7 | 150.2 | 153.1 | 157.9 |
| | | Pr Dis | 260.7 | 261.8 | 263.6 | 268.0 | 300.9 | 302.0 | 303.8 | 308.2 | 343.1 | 344.2 | 346.0 | 350.4 | 388.5 | 389.6 | 391.4 | 395.8 | 437.4 | 438.5 | 440.3 | 444.8 | 489.7 | 490.8 | 492.6 | 497.0 |
| | | Amps | 12.6 | 12.6 | 12.6 | 12.7 | 14.4 | 14.4 | 14.4 | 14.5 | 16.4 | 16.4 | 16.4 | 16.5 | 18.6 | 18.6 | 18.5 | 18.7 | 21.0 | 21.0 | 21.0 | 21.1 | 23.8 | 23.8 | 23.8 | 23.9 |
| | | Power | 3,292 | 3,289 | 3,282 | 3,314 | 3,705 | 3,701 | 3,694 | 3,726 | 4,165 | 4,162 | 4,154 | 4,186 | 4,663 | 4,660 | 4,652 | 4,684 | 5,219 | 5,216 | 5,209 | 5,240 | 5,872 | 5,869 | 5,862 | 5,893 |

IDB*: Entering Indoor Dry Bulb Temperature

Shaded area reflects AHRI conditions.

kW = Total system power

High and low pressures are measured at the liquid and suction service valves.

Amps = outdoor unit amps

## Expanded Cooling Data — DZ18VC0601A* / DV61PECD14A* (Low Stage)

| | | | Outdoor Ambient Temperature | | | | | | | | | | | | | | | | | | | | | | | |
|---|---|---|---|---|---|---|---|---|---|---|---|---|---|---|---|---|---|---|---|---|---|---|---|---|---|---|
| | | | 65 | | | | 75 | | | | 85 | | | | 95 | | | | 105 | | | | 115 | | | |
| | | | Entering Indoor Wet Bulb Temperature | | | | | | | | | | | | | | | | | | | | | | | |
| ID DB | Air | ID WB | 59 | 63 | 67 | 71 | 59 | 63 | 67 | 71 | 59 | 63 | 67 | 71 | 59 | 63 | 67 | 71 | 59 | 63 | 67 | 71 | 59 | 63 | 67 | 71 |
| 70 | 1130 | MBh | 38,852 | 39,400 | 40,558 | --- | 38,505 | 39,053 | 40,211 | --- | 37,493 | 38,040 | 39,198 | --- | 35,751 | 36,298 | 37,457 | --- | 33,622 | 34,170 | 35,328 | --- | 31,679 | 32,226 | 33,385 | --- |
| | | S/T | 0.62 | 0.54 | 0.41 | --- | 0.63 | 0.55 | 0.41 | --- | 0.65 | 0.58 | 0.44 | --- | 0.67 | 0.60 | 0.46 | --- | 0.69 | 0.62 | 0.48 | --- | 1.00 | 0.67 | 0.53 | --- |
| | | ΔT | 19.3 | 17.5 | 14.1 | --- | 19.3 | 17.5 | 14.1 | --- | 19.5 | 17.7 | 14.3 | --- | 19.3 | 17.4 | 14.1 | --- | 19.0 | 17.2 | 13.8 | --- | 20.1 | 18.3 | 15.0 | --- |
| | | Pr Suc | 117.5 | 118.9 | 121.9 | --- | 124.6 | 126.1 | 129.0 | --- | 130.9 | 132.3 | 135.3 | --- | 136.1 | 137.6 | 140.6 | --- | 141.3 | 142.8 | 145.7 | --- | 147.8 | 149.2 | 152.2 | --- |
| | | Pr Dis | 244.2 | 245.3 | 247.0 | --- | 282.7 | 283.7 | 285.5 | --- | 323.0 | 324.0 | 325.8 | --- | 366.4 | 367.5 | 369.2 | --- | 413.2 | 414.2 | 416.0 | --- | 463.1 | 464.2 | 465.9 | --- |
| | | Amps | 7.8 | 7.8 | 7.8 | --- | 9.0 | 9.0 | 8.9 | --- | 10.2 | 10.2 | 10.2 | --- | 11.6 | 11.6 | 11.6 | --- | 13.1 | 13.1 | 13.1 | --- | 14.9 | 14.9 | 14.9 | --- |
| | | Power | 2,047 | 2,045 | 2,040 | --- | 2,306 | 2,304 | 2,300 | --- | 2,596 | 2,594 | 2,589 | --- | 2,909 | 2,907 | 2,902 | --- | 3,259 | 3,257 | 3,252 | --- | 3,669 | 3,667 | 3,663 | --- |
| | 1260 | MBh | 39,279 | 39,826 | 40,985 | --- | 38,932 | 39,479 | 40,637 | --- | 37,919 | 38,467 | 39,625 | --- | 36,178 | 36,725 | 37,883 | --- | 34,049 | 34,597 | 35,755 | --- | 32,106 | 32,653 | 33,811 | --- |
| | | S/T | 0.67 | 0.59 | 0.46 | --- | 0.67 | 0.60 | 0.46 | --- | 0.70 | 0.62 | 0.49 | --- | 0.72 | 0.64 | 0.51 | --- | 0.74 | 0.67 | 0.53 | --- | 1.00 | 0.72 | 0.58 | --- |
| | | ΔT | 18.4 | 16.6 | 13.3 | --- | 18.4 | 16.6 | 13.2 | --- | 18.6 | 16.8 | 13.5 | --- | 18.4 | 16.6 | 13.2 | --- | 18.1 | 16.3 | 13.0 | --- | 19.3 | 17.5 | 14.1 | --- |
| | | Pr Suc | 118.9 | 120.4 | 123.3 | --- | 126.0 | 127.5 | 130.5 | --- | 132.3 | 133.7 | 136.7 | --- | 137.6 | 139.0 | 142.0 | --- | 142.7 | 144.2 | 147.2 | --- | 149.2 | 150.7 | 153.7 | --- |
| | | Pr Dis | 245.9 | 247.0 | 248.7 | --- | 284.4 | 285.4 | 287.2 | --- | 324.7 | 325.7 | 327.5 | --- | 368.1 | 369.2 | 370.9 | --- | 414.9 | 415.9 | 417.7 | --- | 464.8 | 465.9 | 467.6 | --- |
| | | Amps | 7.9 | 7.9 | 7.9 | --- | 9.0 | 9.0 | 9.0 | --- | 10.3 | 10.3 | 10.2 | --- | 11.6 | 11.6 | 11.6 | --- | 13.1 | 13.1 | 13.1 | --- | 14.9 | 14.9 | 14.9 | --- |
| | | Power | 2,058 | 2,056 | 2,051 | --- | 2,317 | 2,315 | 2,311 | --- | 2,607 | 2,605 | 2,600 | --- | 2,920 | 2,918 | 2,913 | --- | 3,270 | 3,268 | 3,263 | --- | 3,680 | 3,678 | 3,674 | --- |
| | 1390 | MBh | 39,775 | 40,323 | 41,481 | --- | 39,428 | 39,976 | 41,134 | --- | 38,416 | 38,964 | 40,122 | --- | 36,674 | 37,222 | 38,380 | --- | 34,545 | 35,093 | 36,251 | --- | 32,602 | 33,150 | 34,308 | --- |
| | | S/T | 0.70 | 0.62 | 0.49 | --- | 0.70 | 0.63 | 0.49 | --- | 0.73 | 0.65 | 0.52 | --- | 0.75 | 0.67 | 0.54 | --- | 1.00 | 0.69 | 0.56 | --- | 1.00 | 0.75 | 0.61 | --- |
| | | ΔT | 17.7 | 15.9 | 12.5 | --- | 17.6 | 15.8 | 12.4 | --- | 17.9 | 16.1 | 12.7 | --- | 17.6 | 15.8 | 12.4 | --- | 17.4 | 15.6 | 12.2 | --- | 18.5 | 16.7 | 13.3 | --- |
| | | Pr Suc | 120.5 | 121.9 | 124.9 | --- | 127.6 | 129.0 | 132.0 | --- | 133.8 | 135.3 | 138.3 | --- | 139.1 | 140.6 | 143.6 | --- | 144.3 | 145.8 | 148.7 | --- | 150.8 | 152.2 | 155.2 | --- |
| | | Pr Dis | 247.6 | 248.6 | 250.3 | --- | 286.0 | 287.1 | 288.8 | --- | 326.3 | 327.4 | 329.1 | --- | 369.8 | 370.8 | 372.5 | --- | 416.5 | 417.6 | 419.3 | --- | 466.5 | 467.5 | 469.3 | --- |
| | | Amps | 7.9 | 7.9 | 7.9 | --- | 9.0 | 9.0 | 9.0 | --- | 10.3 | 10.3 | 10.3 | --- | 11.7 | 11.7 | 11.6 | --- | 13.2 | 13.2 | 13.2 | --- | 15.0 | 15.0 | 14.9 | --- |
| | | Power | 2,067 | 2,065 | 2,061 | --- | 2,327 | 2,325 | 2,320 | --- | 2,616 | 2,614 | 2,610 | --- | 2,929 | 2,927 | 2,923 | --- | 3,279 | 3,277 | 3,273 | --- | 3,690 | 3,688 | 3,683 | --- |
| 75 | 1130 | MBh | 38,875 | 39,422 | 40,580 | 42,349 | 38,528 | 39,075 | 40,233 | 42,002 | 37,515 | 38,063 | 39,221 | 40,990 | 35,773 | 36,321 | 37,479 | 39,248 | 33,645 | 34,192 | 35,351 | 37,120 | 31,701 | 32,249 | 33,407 | 35,176 |
| | | S/T | 0.75 | 0.67 | 0.54 | 0.39 | 0.76 | 0.68 | 0.54 | 0.40 | 0.78 | 0.71 | 0.57 | 0.43 | 1.00 | 0.72 | 0.59 | 0.45 | 1.00 | 0.75 | 0.61 | 0.47 | 1.00 | 0.80 | 0.66 | 0.52 |
| | | ΔT | 23.3 | 21.5 | 18.1 | 14.6 | 23.2 | 21.4 | 18.1 | 14.6 | 23.5 | 21.7 | 18.3 | 14.8 | 23.2 | 21.4 | 18.0 | 14.6 | 23.0 | 21.2 | 17.8 | 14.3 | 24.1 | 22.3 | 18.9 | 15.4 |
| | | Pr Suc | 117.5 | 119.0 | 121.9 | 126.9 | 124.6 | 126.1 | 129.1 | 134.1 | 130.9 | 132.3 | 135.3 | 140.3 | 136.2 | 137.6 | 140.6 | 145.6 | 141.3 | 142.8 | 145.8 | 150.8 | 147.8 | 149.3 | 152.3 | 157.3 |
| | | Pr Dis | 244.4 | 245.5 | 247.2 | 251.4 | 282.9 | 284.0 | 285.7 | 289.9 | 323.2 | 324.3 | 326.0 | 330.2 | 366.6 | 367.7 | 369.4 | 373.6 | 413.4 | 414.5 | 416.2 | 420.4 | 463.3 | 464.4 | 466.1 | 470.4 |
| | | Amps | 7.8 | 7.8 | 7.8 | 7.9 | 9.0 | 8.9 | 8.9 | 9.0 | 10.2 | 10.2 | 10.2 | 10.3 | 11.6 | 11.6 | 11.5 | 11.6 | 13.1 | 13.1 | 13.1 | 13.2 | 14.9 | 14.9 | 14.9 | 14.9 |
| | | Power | 2,045 | 2,043 | 2,039 | 2,059 | 2,305 | 2,303 | 2,298 | 2,318 | 2,594 | 2,592 | 2,588 | 2,607 | 2,907 | 2,905 | 2,901 | 2,921 | 3,257 | 3,255 | 3,251 | 3,271 | 3,668 | 3,666 | 3,661 | 3,681 |
| | 1260 | MBh | 39,301 | 39,849 | 41,007 | 42,776 | 38,954 | 39,502 | 40,660 | 42,429 | 37,942 | 38,490 | 39,648 | 41,417 | 36,200 | 36,748 | 37,906 | 39,675 | 34,072 | 34,619 | 35,777 | 37,546 | 32,128 | 32,676 | 33,834 | 35,603 |
| | | S/T | 0.80 | 0.72 | 0.59 | 0.44 | 0.80 | 0.73 | 0.59 | 0.45 | 0.83 | 0.75 | 0.62 | 0.47 | 1.00 | 0.77 | 0.64 | 0.49 | 1.00 | 0.79 | 0.66 | 0.52 | 1.00 | 0.85 | 0.71 | 0.57 |
| | | ΔT | 22.4 | 20.6 | 17.2 | 13.7 | 22.4 | 20.6 | 17.2 | 13.7 | 22.6 | 20.8 | 17.4 | 13.9 | 22.3 | 20.5 | 17.2 | 13.7 | 22.1 | 20.3 | 16.9 | 13.4 | 23.2 | 21.4 | 18.1 | 14.6 |
| | | Pr Suc | 118.9 | 120.4 | 123.4 | 128.4 | 126.1 | 127.5 | 130.5 | 135.5 | 132.3 | 133.8 | 136.7 | 141.7 | 137.6 | 139.0 | 142.0 | 147.0 | 142.8 | 144.2 | 147.2 | 152.2 | 149.3 | 150.7 | 153.7 | 158.7 |
| | | Pr Dis | 246.1 | 247.2 | 248.9 | 253.1 | 284.6 | 285.7 | 287.4 | 291.6 | 324.9 | 326.0 | 327.7 | 331.9 | 368.3 | 369.4 | 371.1 | 375.3 | 415.1 | 416.2 | 417.9 | 422.1 | 465.0 | 466.1 | 467.8 | 472.1 |
| | | Amps | 7.9 | 7.9 | 7.8 | 7.9 | 9.0 | 9.0 | 9.0 | 9.1 | 10.3 | 10.3 | 10.2 | 10.3 | 11.6 | 11.6 | 11.6 | 11.7 | 13.1 | 13.1 | 13.1 | 13.2 | 14.9 | 14.9 | 14.9 | 15.0 |
| | | Power | 2,056 | 2,054 | 2,050 | 2,070 | 2,315 | 2,313 | 2,309 | 2,329 | 2,605 | 2,603 | 2,598 | 2,618 | 2,918 | 2,916 | 2,912 | 2,931 | 3,268 | 3,266 | 3,262 | 3,281 | 3,679 | 3,677 | 3,672 | 3,692 |
| | 1390 | MBh | 39,798 | 40,346 | 41,504 | 43,273 | 39,451 | 39,998 | 41,157 | 42,926 | 38,439 | 38,986 | 40,144 | 41,913 | 36,697 | 37,244 | 38,402 | 40,172 | 34,568 | 35,116 | 36,274 | 38,043 | 32,625 | 33,172 | 34,330 | 36,100 |
| | | S/T | 0.83 | 0.75 | 0.62 | 0.47 | 0.83 | 0.76 | 0.62 | 0.48 | 1.00 | 0.78 | 0.65 | 0.50 | 1.00 | 0.80 | 0.67 | 0.52 | 1.00 | 0.82 | 0.69 | 0.54 | 1.00 | 0.88 | 0.74 | 0.60 |
| | | ΔT | 21.6 | 19.8 | 16.5 | 13.0 | 21.6 | 19.8 | 16.4 | 12.9 | 21.8 | 20.0 | 16.7 | 13.2 | 21.6 | 19.8 | 16.4 | 12.9 | 21.3 | 19.5 | 16.2 | 12.7 | 22.5 | 20.7 | 17.3 | 13.8 |
| | | Pr Suc | 120.5 | 121.9 | 124.9 | 129.9 | 127.6 | 129.1 | 132.1 | 137.0 | 133.9 | 135.3 | 138.3 | 143.3 | 139.1 | 140.6 | 143.6 | 148.6 | 144.3 | 145.8 | 148.8 | 153.8 | 150.8 | 152.3 | 155.3 | 160.2 |
| | | Pr Dis | 247.8 | 248.8 | 250.5 | 254.8 | 286.3 | 287.3 | 289.0 | 293.3 | 326.6 | 327.6 | 329.3 | 333.6 | 370.0 | 371.0 | 372.7 | 377.0 | 416.8 | 417.8 | 419.5 | 423.8 | 466.7 | 467.8 | 469.5 | 473.7 |
| | | Amps | 7.9 | 7.9 | 7.9 | 8.0 | 9.0 | 9.0 | 9.0 | 9.1 | 10.3 | 10.3 | 10.3 | 10.4 | 11.7 | 11.7 | 11.6 | 11.7 | 13.2 | 13.2 | 13.2 | 13.2 | 15.0 | 15.0 | 14.9 | 15.0 |
| | | Power | 2,066 | 2,064 | 2,059 | 2,079 | 2,325 | 2,323 | 2,318 | 2,338 | 2,614 | 2,612 | 2,608 | 2,628 | 2,928 | 2,926 | 2,921 | 2,941 | 3,278 | 3,275 | 3,271 | 3,291 | 3,688 | 3,686 | 3,682 | 3,701 |

IDB*: Entering Indoor Dry Bulb Temperature

Shaded area reflects ACCA (TVA) conditions.

kW = Total system power

High and low pressures are measured at the liquid and suction service valves.

Amps = outdoor unit amps

## Expanded Cooling Data — DZ18VC0601A* / DV61PECD14A* (Low Stage)

| | | | Outdoor Ambient Temperature | | | | | | | | | | | | | | | | | | | | | | | |
|---|---|---|---|---|---|---|---|---|---|---|---|---|---|---|---|---|---|---|---|---|---|---|---|---|---|---|
| | | | 65 | | | | 75 | | | | 85 | | | | 95 | | | | 105 | | | | 115 | | | |
| | | | Entering Indoor Wet Bulb Temperature | | | | | | | | | | | | | | | | | | | | | | | |
| ID DB | Air | ID WB | 59 | 63 | 67 | 71 | 59 | 63 | 67 | 71 | 59 | 63 | 67 | 71 | 59 | 63 | 67 | 71 | 59 | 63 | 67 | 71 | 59 | 63 | 67 | 71 |
| 80 | 1130 | MBh | 39,076 | 39,623 | 40,781 | 42,550 | 38,728 | 39,276 | 40,434 | 42,203 | 37,716 | 38,264 | 39,422 | 41,191 | 35,974 | 36,522 | 37,680 | 39,449 | 33,846 | 34,393 | 35,551 | 37,320 | 31,902 | 32,450 | 33,608 | 35,377 |
| | | S/T | 0.88 | 0.80 | 0.66 | 0.52 | 1.00 | 0.81 | 0.67 | 0.53 | 1.00 | 0.83 | 0.70 | 0.55 | 1.00 | 0.85 | 0.71 | 0.57 | 1.00 | 0.87 | 0.74 | 0.59 | 1.00 | 1.00 | 0.79 | 0.65 |
| | | ΔT | 27.3 | 25.5 | 22.1 | 18.6 | 27.2 | 25.4 | 22.1 | 18.6 | 27.5 | 25.7 | 22.3 | 18.8 | 27.2 | 25.4 | 22.0 | 18.6 | 27.0 | 25.2 | 21.8 | 18.3 | 28.1 | 26.3 | 22.9 | 19.4 |
| | | Pr Suc | 118.0 | 119.5 | 122.5 | 127.4 | 125.2 | 126.6 | 129.6 | 134.6 | 131.4 | 132.8 | 135.8 | 140.8 | 136.7 | 138.1 | 141.1 | 146.1 | 141.9 | 143.3 | 146.3 | 151.3 | 148.3 | 149.8 | 152.8 | 157.8 |
| | | Pr Dis | 244.9 | 245.9 | 247.6 | 251.9 | 283.3 | 284.4 | 286.1 | 290.4 | 323.7 | 324.7 | 326.4 | 330.7 | 367.1 | 368.1 | 369.8 | 374.1 | 413.9 | 414.9 | 416.6 | 420.9 | 463.8 | 464.9 | 466.6 | 470.8 |
| | | Amps | 7.8 | 7.8 | 7.8 | 7.9 | 9.0 | 9.0 | 8.9 | 9.0 | 10.2 | 10.2 | 10.2 | 10.3 | 11.6 | 11.6 | 11.6 | 11.6 | 13.1 | 13.1 | 13.1 | 13.2 | 14.9 | 14.9 | 14.9 | 14.9 |
| | | Power | 2,047 | 2,045 | 2,040 | 2,060 | 2,306 | 2,304 | 2,299 | 2,319 | 2,595 | 2,593 | 2,589 | 2,609 | 2,909 | 2,907 | 2,902 | 2,922 | 3,259 | 3,257 | 3,252 | 3,272 | 3,669 | 3,667 | 3,663 | 3,683 |
| | 1260 | MBh | 39,502 | 40,050 | 41,208 | 42,977 | 39,155 | 39,703 | 40,861 | 42,630 | 38,143 | 38,690 | 39,849 | 41,618 | 36,401 | 36,949 | **38,107** | 39,876 | 34,272 | 34,820 | 35,978 | 37,747 | 32,329 | 32,877 | 34,035 | 35,804 |
| | | S/T | 0.92 | 0.85 | 0.71 | 0.57 | 1.00 | 0.85 | 0.72 | 0.57 | 1.00 | 0.88 | 0.74 | 0.60 | 1.00 | 0.90 | **0.76** | 0.62 | 1.00 | 0.92 | 0.78 | 0.64 | 1.00 | 1.00 | 0.84 | 0.69 |
| | | ΔT | 26.4 | 24.6 | 21.2 | 17.7 | 26.4 | 24.6 | 21.2 | 17.7 | 26.6 | 24.8 | 21.4 | 17.9 | 26.3 | 24.5 | **21.2** | 17.7 | 26.1 | 24.3 | 20.9 | 17.4 | 27.2 | 25.4 | 22.1 | 18.6 |
| | | Pr Suc | 119.5 | 120.9 | 123.9 | 128.9 | 126.6 | 128.0 | 131.0 | 136.0 | 132.8 | 134.3 | 137.3 | 142.3 | 138.1 | 139.6 | **142.5** | 147.5 | 143.3 | 144.7 | 147.7 | 152.7 | 149.8 | 151.2 | 154.2 | 159.2 |
| | | Pr Dis | 246.6 | 247.6 | 249.3 | 253.6 | 285.0 | 286.1 | 287.8 | 292.1 | 325.4 | 326.4 | 328.1 | 332.4 | 368.8 | 369.8 | **371.5** | 375.8 | 415.6 | 416.6 | 418.3 | 422.6 | 465.5 | 466.6 | 468.3 | 472.5 |
| | | Amps | 7.9 | 7.9 | 7.9 | 7.9 | 9.0 | 9.0 | 9.0 | 9.1 | 10.3 | 10.3 | 10.2 | 10.3 | 11.6 | 11.6 | **11.6** | 11.7 | 13.1 | 13.1 | 13.1 | 13.2 | 14.9 | 14.9 | 14.9 | 15.0 |
| | | Power | 2,058 | 2,056 | 2,051 | 2,071 | 2,317 | 2,315 | 2,310 | 2,330 | 2,606 | 2,604 | 2,600 | 2,620 | 2,919 | 2,917 | **2,913** | 2,933 | 3,269 | 3,267 | 3,263 | 3,283 | 3,680 | 3,678 | 3,674 | 3,693 |
| | 1390 | MBh | 39,999 | 40,546 | 41,705 | 43,474 | 39,652 | 40,199 | 41,357 | 43,127 | 38,639 | 39,187 | 40,345 | 42,114 | 36,898 | 37,445 | 38,603 | 40,372 | 34,769 | 35,316 | 36,475 | 38,244 | 32,826 | 33,373 | 34,531 | 36,300 |
| | | S/T | 0.95 | 0.88 | 0.74 | 0.60 | 1.00 | 0.88 | 0.75 | 0.60 | 1.00 | 0.91 | 0.77 | 0.63 | 1.00 | 0.93 | 0.79 | 0.65 | 1.00 | 1.00 | 0.81 | 0.67 | 1.00 | 1.00 | 0.87 | 0.72 |
| | | ΔT | 25.6 | 23.8 | 20.5 | 17.0 | 25.6 | 23.8 | 20.4 | 16.9 | 25.8 | 24.0 | 20.7 | 17.2 | 25.6 | 23.8 | 20.4 | 16.9 | 25.3 | 23.5 | 20.2 | 16.7 | 26.5 | 24.7 | 21.3 | 17.8 |
| | | Pr Suc | 121.0 | 122.5 | 125.4 | 130.4 | 128.1 | 129.6 | 132.6 | 137.6 | 134.4 | 135.8 | 138.8 | 143.8 | 139.7 | 141.1 | 144.1 | 149.1 | 144.8 | 146.3 | 149.3 | 154.3 | 151.3 | 152.8 | 155.8 | 160.8 |
| | | Pr Dis | 248.2 | 249.3 | 251.0 | 255.2 | 286.7 | 287.8 | 289.5 | 293.7 | 327.0 | 328.1 | 329.8 | 334.0 | 370.4 | 371.5 | 373.2 | 377.4 | 417.2 | 418.3 | 420.0 | 424.2 | 467.2 | 468.2 | 469.9 | 474.2 |
| | | Amps | 7.9 | 7.9 | 7.9 | 8.0 | 9.0 | 9.0 | 9.0 | 9.1 | 10.3 | 10.3 | 10.3 | 10.4 | 11.7 | 11.7 | 11.6 | 11.7 | 13.2 | 13.2 | 13.2 | 13.2 | 15.0 | 15.0 | 14.9 | 15.0 |
| | | Power | 2,067 | 2,065 | 2,060 | 2,080 | 2,326 | 2,324 | 2,320 | 2,340 | 2,616 | 2,614 | 2,609 | 2,629 | 2,929 | 2,927 | 2,922 | 2,942 | 3,279 | 3,277 | 3,272 | 3,292 | 3,689 | 3,687 | 3,683 | 3,703 |
| 85 | 1130 | MBh | 39,729 | 40,276 | 41,435 | 43,204 | 39,382 | 39,929 | 41,087 | 42,857 | 38,369 | 38,917 | 40,075 | 41,844 | 36,628 | 37,175 | 38,333 | 40,102 | 34,499 | 35,046 | 36,205 | 37,974 | 32,556 | 33,103 | 34,261 | 36,030 |
| | | S/T | 1.00 | 0.90 | 0.77 | 0.62 | 1.00 | 0.91 | 0.77 | 0.63 | 1.00 | 0.93 | 0.80 | 0.65 | 1.00 | 1.00 | 0.82 | 0.67 | 1.00 | 1.00 | 0.84 | 0.70 | 1.00 | 1.00 | 0.89 | 0.75 |
| | | ΔT | 30.8 | 29.0 | 25.7 | 22.2 | 30.8 | 29.0 | 25.6 | 22.1 | 31.0 | 29.2 | 25.9 | 22.4 | 30.8 | 29.0 | 25.6 | 22.1 | 30.5 | 28.7 | 25.3 | 21.9 | 31.7 | 29.9 | 26.5 | 23.0 |
| | | Pr Suc | 119.8 | 121.2 | 124.2 | 129.2 | 126.9 | 128.4 | 131.3 | 136.3 | 133.2 | 134.6 | 137.6 | 142.6 | 138.4 | 139.9 | 142.9 | 147.9 | 143.6 | 145.1 | 148.0 | 153.0 | 150.1 | 151.6 | 154.5 | 159.5 |
| | | Pr Dis | 246.0 | 247.1 | 248.8 | 253.0 | 284.5 | 285.5 | 287.3 | 291.5 | 324.8 | 325.9 | 327.6 | 331.8 | 368.2 | 369.3 | 371.0 | 375.2 | 415.0 | 416.1 | 417.8 | 422.0 | 464.9 | 466.0 | 467.7 | 472.0 |
| | | Amps | 7.9 | 7.8 | 7.8 | 7.9 | 9.0 | 9.0 | 9.0 | 9.0 | 10.2 | 10.2 | 10.2 | 10.3 | 11.6 | 11.6 | 11.6 | 11.7 | 13.1 | 13.1 | 13.1 | 13.2 | 14.9 | 14.9 | 14.9 | 15.0 |
| | | Power | 2,052 | 2,050 | 2,045 | 2,065 | 2,311 | 2,309 | 2,304 | 2,324 | 2,600 | 2,598 | 2,594 | 2,614 | 2,914 | 2,912 | 2,907 | 2,927 | 3,264 | 3,261 | 3,257 | 3,277 | 3,674 | 3,672 | 3,668 | 3,687 |
| | 1260 | MBh | 40,155 | 40,703 | 41,861 | 43,630 | 39,808 | 40,356 | 41,514 | 43,283 | 38,796 | 39,344 | 40,502 | 42,271 | 37,054 | 37,602 | 38,760 | 40,529 | 34,926 | 35,473 | 36,631 | 38,400 | 32,982 | 33,530 | 34,688 | 36,457 |
| | | S/T | 1.00 | 0.95 | 0.81 | 0.67 | 1.00 | 0.96 | 0.82 | 0.68 | 1.00 | 1.00 | 0.84 | 0.70 | 1.00 | 1.00 | 0.86 | 0.72 | 1.00 | 1.00 | 0.89 | 0.74 | 1.00 | 1.00 | 0.94 | 0.79 |
| | | ΔT | 30.0 | 28.1 | 24.8 | 21.3 | 29.9 | 28.1 | 24.7 | 21.2 | 30.2 | 28.4 | 25.0 | 21.5 | 29.9 | 28.1 | 24.7 | 21.2 | 29.6 | 27.8 | 24.5 | 21.0 | 30.8 | 29.0 | 25.6 | 22.1 |
| | | Pr Suc | 121.2 | 122.7 | 125.6 | 130.6 | 128.3 | 129.8 | 132.8 | 137.8 | 134.6 | 136.0 | 139.0 | 144.0 | 139.9 | 141.3 | 144.3 | 149.3 | 145.0 | 146.5 | 149.5 | 154.5 | 151.5 | 153.0 | 156.0 | 161.0 |
| | | Pr Dis | 247.7 | 248.8 | 250.5 | 254.7 | 286.2 | 287.2 | 289.0 | 293.2 | 326.5 | 327.6 | 329.3 | 333.5 | 369.9 | 371.0 | 372.7 | 376.9 | 416.7 | 417.8 | 419.5 | 423.7 | 466.6 | 467.7 | 469.4 | 473.7 |
| | | Amps | 7.9 | 7.9 | 7.9 | 8.0 | 9.0 | 9.0 | 9.0 | 9.1 | 10.3 | 10.3 | 10.3 | 10.3 | 11.6 | 11.6 | 11.6 | 11.7 | 13.2 | 13.2 | 13.1 | 13.2 | 15.0 | 14.9 | 14.9 | 15.0 |
| | | Power | 2,063 | 2,060 | 2,056 | 2,076 | 2,322 | 2,320 | 2,315 | 2,335 | 2,611 | 2,609 | 2,605 | 2,625 | 2,924 | 2,922 | 2,918 | 2,938 | 3,274 | 3,272 | 3,268 | 3,288 | 3,685 | 3,683 | 3,679 | 3,698 |
| | 1390 | MBh | 40,652 | 41,200 | 42,358 | 44,127 | 40,305 | 40,853 | 42,011 | 43,780 | 39,293 | 39,840 | 40,998 | 42,767 | 37,551 | 38,098 | 39,257 | 41,026 | 35,422 | 35,970 | 37,128 | 38,897 | 33,479 | 34,026 | 35,185 | 36,954 |
| | | S/T | 1.00 | 0.98 | 0.84 | 0.70 | 1.00 | 0.99 | 0.85 | 0.71 | 1.00 | 1.00 | 0.87 | 0.73 | 1.00 | 1.00 | 0.89 | 0.75 | 1.00 | 1.00 | 0.92 | 0.77 | 1.00 | 1.00 | 0.97 | 0.82 |
| | | ΔT | 29.2 | 27.4 | 24.0 | 20.5 | 29.1 | 27.3 | 24.0 | 20.5 | 29.4 | 27.6 | 24.2 | 20.7 | 29.1 | 27.3 | 23.9 | 20.4 | 28.9 | 27.1 | 23.7 | 20.2 | 30.0 | 28.2 | 24.8 | 21.3 |
| | | Pr Suc | 122.8 | 124.2 | 127.2 | 132.2 | 129.9 | 131.3 | 134.3 | 139.3 | 136.1 | 137.6 | 140.6 | 145.6 | 141.4 | 142.9 | 145.9 | 150.8 | 146.6 | 148.1 | 151.0 | 156.0 | 153.1 | 154.5 | 157.5 | 162.5 |
| | | Pr Dis | 249.4 | 250.4 | 252.1 | 256.4 | 287.8 | 288.9 | 290.6 | 294.9 | 328.2 | 329.2 | 330.9 | 335.2 | 371.6 | 372.6 | 374.3 | 378.6 | 418.4 | 419.4 | 421.1 | 425.4 | 468.3 | 469.4 | 471.1 | 475.3 |
| | | Amps | 7.9 | 7.9 | 7.9 | 8.0 | 9.1 | 9.1 | 9.0 | 9.1 | 10.3 | 10.3 | 10.3 | 10.4 | 11.7 | 11.7 | 11.7 | 11.7 | 13.2 | 13.2 | 13.2 | 13.3 | 15.0 | 15.0 | 15.0 | 15.1 |
| | | Power | 2,072 | 2,070 | 2,065 | 2,085 | 2,331 | 2,329 | 2,325 | 2,345 | 2,621 | 2,619 | 2,614 | 2,634 | 2,934 | 2,932 | 2,927 | 2,947 | 3,284 | 3,282 | 3,277 | 3,297 | 3,694 | 3,692 | 3,688 | 3,708 |

IDB*: Entering Indoor Dry Bulb Temperature

High and low pressures are measured at the liquid and suction service valves.

Shaded area reflects AHRI conditions.

kW = Total system power

Amps = outdoor unit amps

**DZ18VC0241 + DV37PECC (HIGH STAGE)**

| | Outdoor Ambient Temperature | | | | | | | | | | | | | | | | |
|---|---|---|---|---|---|---|---|---|---|---|---|---|---|---|---|---|---|
| | 65 | 60 | 55 | 50 | 47 | 45 | 40 | 35 | 30 | 25 | 20 | 17 | 15 | 10 | 5 | 0 | -5 |
| MBh | 26.33 | 25.19 | 24.06 | 22.95 | 22.20 | 21.63 | 20.57 | 18.91 | 18.38 | 17.67 | 17.24 | 17.00 | 16.65 | 15.79 | 14.77 | 13.37 | 13.19 |
| T/R | 23.45 | 22.64 | 21.84 | 21.04 | 20.56 | 20.20 | 19.12 | 17.97 | 17.01 | 16.36 | 15.96 | 15.74 | 15.42 | 14.62 | 13.68 | 12.38 | 12.21 |
| KW | 1.55 | 1.58 | 1.61 | 1.63 | 1.65 | 1.66 | 1.68 | 1.71 | 1.74 | 1.76 | 1.79 | 1.81 | 1.82 | 1.84 | 1.87 | 1.89 | 1.92 |
| Amps | 5.5 | 5.6 | 5.7 | 5.8 | 5.9 | 5.9 | 6.1 | 6.2 | 6.3 | 6.4 | 6.5 | 6.6 | 6.6 | 6.7 | 6.9 | 7.0 | 7.1 |
| COP | 4.97 | 4.68 | 4.39 | 4.12 | 3.95 | 3.82 | 3.58 | 3.24 | 3.10 | 2.94 | 2.82 | 2.76 | 2.69 | 2.51 | 2.32 | 2.07 | 2.01 |
| Hi PR | 355 | 343 | 331 | 320 | 313 | 308 | 297 | 285 | 274 | 262 | 251 | 244 | 239 | 228 | 216 | 205 | 193 |
| LO PR | 135 | 127 | 118 | 110 | 105 | 102 | 93 | 85 | 76 | 68 | 60 | 54 | 51 | 43 | 34 | 26 | 17 |

**DZ18VC0361 + DV59PECD (HIGH STAGE)**

| | Outdoor Ambient Temperature | | | | | | | | | | | | | | | | |
|---|---|---|---|---|---|---|---|---|---|---|---|---|---|---|---|---|---|
| | 65 | 60 | 55 | 50 | 47 | 45 | 40 | 35 | 30 | 25 | 20 | 17 | 15 | 10 | 5 | 0 | -5 |
| MBh | 37.98 | 36.55 | 35.14 | 33.75 | 32.80 | 32.06 | 30.73 | 28.50 | 28.19 | 27.34 | 26.86 | 26.60 | 26.19 | 25.15 | 23.44 | 21.33 | 21.40 |
| T/R | 33.82 | 32.86 | 31.90 | 30.95 | 30.37 | 29.99 | 28.75 | 27.31 | 26.10 | 25.31 | 24.87 | 24.63 | 24.25 | 23.29 | 21.71 | 19.75 | 19.81 |
| KW | 2.21 | 2.30 | 2.39 | 2.48 | 2.53 | 2.57 | 2.66 | 2.75 | 2.84 | 2.93 | 3.02 | 3.07 | 3.11 | 3.20 | 3.29 | 3.38 | 3.46 |
| Amps | 7.6 | 8.0 | 8.4 | 8.8 | 9.0 | 9.2 | 9.5 | 9.9 | 10.3 | 10.7 | 11.1 | 11.3 | 11.5 | 11.9 | 12.3 | 12.7 | 13.1 |
| COP | 5.05 | 4.67 | 4.32 | 4.00 | 3.80 | 3.66 | 3.39 | 3.04 | 2.91 | 2.74 | 2.61 | 2.54 | 2.47 | 2.31 | 2.09 | 1.85 | 1.81 |
| Hi PR | 342 | 331 | 319 | 308 | 302 | 297 | 286 | 275 | 264 | 253 | 242 | 235 | 231 | 219 | 208 | 197 | 186 |
| LO PR | 120 | 113 | 105 | 98 | 93 | 90 | 83 | 75 | 68 | 60 | 53 | 48 | 45 | 38 | 30 | 23 | 16 |

**DZ18VC0481 + DV61PECD (HIGH STAGE)**

| | Outdoor Ambient Temperature | | | | | | | | | | | | | | | | |
|---|---|---|---|---|---|---|---|---|---|---|---|---|---|---|---|---|---|
| | 65 | 60 | 55 | 50 | 47 | 45 | 40 | 35 | 30 | 25 | 20 | 17 | 15 | 10 | 5 | 0 | -5 |
| MBh | 50.96 | 49.18 | 47.43 | 45.70 | 44.50 | 43.56 | 41.90 | 39.01 | 38.88 | 37.84 | 37.30 | 37.00 | 36.50 | 35.25 | 32.80 | 29.91 | 30.06 |
| T/R | 45.37 | 44.22 | 43.06 | 41.90 | 41.21 | 40.74 | 39.31 | 37.52 | 36.00 | 35.04 | 34.54 | 34.26 | 33.80 | 32.64 | 30.37 | 27.69 | 27.83 |
| KW | 2.99 | 3.09 | 3.19 | 3.30 | 3.36 | 3.40 | 3.51 | 3.61 | 3.72 | 3.82 | 3.92 | 3.99 | 4.03 | 4.13 | 4.24 | 4.34 | 4.45 |
| Amps | 10.8 | 11.2 | 11.7 | 12.2 | 12.4 | 12.6 | 13.1 | 13.5 | 14.0 | 14.4 | 14.9 | 15.1 | 15.3 | 15.8 | 16.2 | 16.7 | 17.1 |
| COP | 5.00 | 4.66 | 4.35 | 4.06 | 3.88 | 3.75 | 3.50 | 3.17 | 3.07 | 2.90 | 2.79 | 2.72 | 2.66 | 2.50 | 2.27 | 2.02 | 1.98 |
| Hi PR | 375 | 363 | 351 | 339 | 331 | 326 | 314 | 302 | 290 | 278 | 265 | 258 | 253 | 241 | 229 | 217 | 204 |
| LO PR | 122 | 115 | 107 | 99 | 95 | 92 | 84 | 77 | 69 | 61 | 54 | 49 | 46 | 39 | 31 | 23 | 16 |

**DZ18VC0601 + DV61PECD (HIGH STAGE)**

| | Outdoor Ambient Temperature | | | | | | | | | | | | | | | | |
|---|---|---|---|---|---|---|---|---|---|---|---|---|---|---|---|---|---|
| | 65 | 60 | 55 | 50 | 47 | 45 | 40 | 35 | 30 | 25 | 20 | 17 | 15 | 10 | 5 | 0 | -5 |
| MBh | 61.88 | 59.57 | 57.29 | 55.05 | 53.50 | 52.31 | 50.14 | 46.53 | 46.05 | 44.68 | 43.92 | 43.50 | 42.83 | 41.17 | 38.36 | 34.91 | 35.03 |
| T/R | 55.10 | 53.55 | 52.01 | 50.47 | 49.54 | 48.92 | 46.93 | 44.61 | 42.64 | 41.37 | 40.67 | 40.28 | 39.66 | 38.12 | 35.52 | 32.33 | 32.43 |
| KW | 3.65 | 3.76 | 3.87 | 3.98 | 4.04 | 4.08 | 4.19 | 4.30 | 4.41 | 4.51 | 4.62 | 4.69 | 4.73 | 4.84 | 4.95 | 5.05 | 5.16 |
| Amps | 13.3 | 13.8 | 14.2 | 14.7 | 15.0 | 15.2 | 15.6 | 16.1 | 16.6 | 17.0 | 17.5 | 17.8 | 18.0 | 18.4 | 18.9 | 19.4 | 19.8 |
| COP | 4.96 | 4.64 | 4.34 | 4.06 | 3.88 | 3.75 | 3.51 | 3.17 | 3.06 | 2.90 | 2.78 | 2.72 | 2.65 | 2.49 | 2.27 | 2.02 | 1.99 |
| Hi PR | 403 | 390 | 377 | 363 | 356 | 350 | 337 | 324 | 311 | 298 | 285 | 277 | 272 | 259 | 246 | 232 | 219 |
| LO PR | 138 | 129 | 121 | 112 | 107 | 103 | 95 | 86 | 78 | 69 | 61 | 55 | 52 | 43 | 35 | 26 | 18 |

Calculations are based on nominal CFM and 70 °F indoor dry bulb.

Conditions at 47°F outdoor ambient temperature

Amps = Outdoor unit amps (comp.+fan)

kW = Total system power

climaprovectos.com

**DZ18VC0241 + DV37PECC (Low Stage)**

| | Outdoor Ambient Temperature | | | | | | | | | | | | | | | | |
|---|---|---|---|---|---|---|---|---|---|---|---|---|---|---|---|---|---|
| | 65 | 60 | 55 | 50 | 47 | 45 | 40 | 35 | 30 | 25 | 20 | 17 | 15 | 10 | 5 | 0 | -5 |
| MBh | 19.88 | 18.80 | 17.74 | 16.70 | 16.02 | 15.51 | 14.38 | 13.11 | 12.27 | 11.59 | 11.11 | 10.85 | 10.51 | 9.65 | 8.79 | 7.93 | 7.07 |
| T/R | 17.70 | 16.90 | 16.10 | 15.31 | 14.83 | 14.42 | 13.32 | 12.25 | 11.36 | 10.73 | 10.29 | 10.05 | 9.73 | 8.93 | 8.14 | 7.34 | 6.54 |
| KW | 0.97 | 0.96 | 0.96 | 0.95 | 0.95 | 0.95 | 0.94 | 0.94 | 0.93 | 0.93 | 0.92 | 0.92 | 0.92 | 0.92 | 0.91 | 0.91 | 0.90 |
| Amps | 3.2 | 3.2 | 3.2 | 3.2 | 3.2 | 3.1 | 3.1 | 3.1 | 3.1 | 3.1 | 3.0 | 3.0 | 3.0 | 3.0 | 3.0 | 3.0 | 2.9 |
| COP | 6.01 | 5.71 | 5.42 | 5.13 | 4.93 | 4.79 | 4.46 | 4.09 | 3.85 | 3.65 | 3.52 | 3.45 | 3.35 | 3.09 | 2.83 | 2.57 | 2.30 |
| Hi PR | 344 | 332 | 321 | 310 | 303 | 299 | 288 | 277 | 265 | 254 | 243 | 236 | 232 | 221 | 209 | 198 | 187 |
| LO PR | 133 | 125 | 116 | 108 | 103 | 100 | 92 | 83 | 75 | 67 | 58 | 54 | 50 | 42 | 34 | 25 | 17 |

**DZ18VC0361 + DV59PECD (Low Stage)**

| | Outdoor Ambient Temperature | | | | | | | | | | | | | | | | |
|---|---|---|---|---|---|---|---|---|---|---|---|---|---|---|---|---|---|
| | 65 | 60 | 55 | 50 | 47 | 45 | 40 | 35 | 30 | 25 | 20 | 17 | 15 | 10 | 5 | 0 | -5 |
| MBh | 28.78 | 27.35 | 25.95 | 24.57 | 23.66 | 22.98 | 21.60 | 19.73 | 18.79 | 17.90 | 17.30 | 16.98 | 16.54 | 15.42 | 14.31 | 13.05 | 12.08 |
| T/R | 25.62 | 24.59 | 23.56 | 22.53 | 21.91 | 21.41 | 20.00 | 18.58 | 17.40 | 16.57 | 16.02 | 15.72 | 15.31 | 14.28 | 13.25 | 12.08 | 11.19 |
| KW | 1.40 | 1.42 | 1.43 | 1.45 | 1.46 | 1.47 | 1.49 | 1.50 | 1.52 | 1.54 | 1.56 | 1.57 | 1.57 | 1.59 | 1.61 | 1.63 | 1.65 |
| Amps | 4.5 | 4.6 | 4.7 | 4.8 | 4.8 | 4.8 | 4.9 | 5.0 | 5.1 | 5.2 | 5.2 | 5.3 | 5.3 | 5.4 | 5.5 | 5.5 | 5.6 |
| COP | 6.03 | 5.66 | 5.31 | 4.96 | 4.75 | 4.59 | 4.26 | 3.85 | 3.62 | 3.41 | 3.26 | 3.18 | 3.08 | 2.84 | 2.60 | 2.35 | 2.15 |
| Hi PR | 331 | 320 | 310 | 299 | 292 | 288 | 277 | 267 | 256 | 245 | 234 | 228 | 223 | 213 | 202 | 191 | 180 |
| LO PR | 118 | 111 | 104 | 96 | 92 | 89 | 81 | 74 | 67 | 59 | 52 | 48 | 45 | 37 | 30 | 23 | 15 |

**DZ18VC0481 + DV61PECD (Low Stage)**

| | Outdoor Ambient Temperature | | | | | | | | | | | | | | | | |
|---|---|---|---|---|---|---|---|---|---|---|---|---|---|---|---|---|---|
| | 65 | 60 | 55 | 50 | 47 | 45 | 40 | 35 | 30 | 25 | 20 | 17 | 15 | 10 | 5 | 0 | -5 |
| MBh | 38.68 | 36.85 | 35.05 | 33.28 | 32.10 | 31.22 | 29.51 | 26.99 | 25.90 | 24.76 | 24.02 | 23.62 | 23.06 | 21.64 | 20.23 | 18.32 | 17.40 |
| T/R | 34.44 | 33.13 | 31.82 | 30.51 | 29.73 | 29.11 | 27.33 | 25.50 | 23.98 | 22.93 | 22.24 | 21.87 | 21.35 | 20.04 | 18.73 | 16.96 | 16.11 |
| KW | 1.89 | 1.90 | 1.92 | 1.93 | 1.94 | 1.95 | 1.96 | 1.98 | 2.00 | 2.01 | 2.03 | 2.04 | 2.04 | 2.06 | 2.07 | 2.09 | 2.11 |
| Amps | 6.5 | 6.6 | 6.6 | 6.7 | 6.7 | 6.8 | 6.8 | 6.9 | 7.0 | 7.0 | 7.1 | 7.1 | 7.2 | 7.2 | 7.3 | 7.4 | 7.4 |
| COP | 6.01 | 5.68 | 5.36 | 5.05 | 4.85 | 4.70 | 4.40 | 4.00 | 3.80 | 3.61 | 3.47 | 3.40 | 3.31 | 3.08 | 2.86 | 2.57 | 2.42 |
| Hi PR | 364 | 352 | 340 | 328 | 321 | 316 | 304 | 293 | 281 | 269 | 257 | 250 | 245 | 233 | 222 | 210 | 198 |
| LO PR | 120 | 113 | 105 | 98 | 93 | 90 | 83 | 75 | 68 | 60 | 53 | 48 | 45 | 38 | 30 | 23 | 15 |

**DZ18VC0601 + DV61PECD (Low Stage)**

| | Outdoor Ambient Temperature | | | | | | | | | | | | | | | | |
|---|---|---|---|---|---|---|---|---|---|---|---|---|---|---|---|---|---|
| | 65 | 60 | 55 | 50 | 47 | 45 | 40 | 35 | 30 | 25 | 20 | 17 | 15 | 10 | 5 | 0 | -5 |
| MBh | 46.89 | 44.58 | 42.31 | 40.07 | 38.60 | 37.49 | 35.25 | 32.21 | 30.70 | 29.25 | 28.29 | 27.77 | 27.05 | 25.25 | 23.44 | 21.36 | 19.84 |
| T/R | 41.75 | 40.08 | 38.41 | 36.74 | 35.74 | 34.93 | 32.64 | 30.34 | 28.42 | 27.09 | 26.20 | 25.71 | 25.05 | 23.38 | 21.71 | 19.78 | 18.36 |
| KW | 2.30 | 2.31 | 2.32 | 2.33 | 2.33 | 2.34 | 2.35 | 2.36 | 2.37 | 2.38 | 2.39 | 2.39 | 2.40 | 2.41 | 2.42 | 2.43 | 2.44 |
| Amps | 8.0 | 8.0 | 8.1 | 8.1 | 8.2 | 8.2 | 8.2 | 8.3 | 8.3 | 8.3 | 8.4 | 8.4 | 8.4 | 8.5 | 8.5 | 8.6 | 8.6 |
| COP | 5.98 | 5.66 | 5.35 | 5.04 | 4.85 | 4.70 | 4.40 | 4.00 | 3.80 | 3.61 | 3.47 | 3.40 | 3.31 | 3.07 | 2.84 | 2.58 | 2.39 |
| Hi PR | 390 | 378 | 365 | 352 | 345 | 340 | 327 | 314 | 301 | 289 | 276 | 268 | 263 | 251 | 238 | 225 | 213 |
| LO PR | 135 | 127 | 118 | 110 | 105 | 102 | 93 | 85 | 76 | 68 | 60 | 55 | 51 | 43 | 34 | 26 | 17 |

Calculations are based on nominal CFM and 70 °F indoor dry bulb.
Conditions at 47°F outdoor ambient temperature

Amps = Outdoor unit amps (comp.+fan)
kW = Total system power

Climaprovectos.com

**COOLING MODE**

| Tonnage | Speed | Total Unit Sound Rating (dBA) | Octave Band Spectrum Frequency (Hz) Analysis (dB) | | | | | | |
|---|---|---|---|---|---|---|---|---|---|
| | | | 125 | 250 | 500 | 1000 | 2000 | 4000 | 8000 |
| 2 Tons | Minimum | 55.8 | 45.9 | 48.2 | 48.2 | 51.5 | 46.7 | 42.5 | 31.6 |
| | Intermediate | 58.1 | 49.9 | 50.0 | 52.2 | 51.4 | 49.2 | 40.2 | 26.8 |
| | Maximum | 69.5 | 54.9 | 56.4 | 61.5 | 61.9 | 65.9 | 61.1 | 49.2 |
| 3 Tons | Minimum | 60.3 | 50.8 | 49.6 | 50.9 | 55.1 | 54.3 | 50.3 | 37.7 |
| | Intermediate | 61.2 | 52.9 | 50.9 | 53.7 | 54.3 | 54.8 | 49.0 | 38.9 |
| | Maximum | 68.1 | 50.7 | 59.4 | 61.2 | 62.8 | 60.7 | 61.5 | 48.7 |
| 4 Tons | Minimum | 62.9 | 45.8 | 47.8 | 56.7 | 59.6 | 56.2 | 47.8 | 42.9 |
| | Intermediate | 63.9 | 46.4 | 49.8 | 57.7 | 60.2 | 56.7 | 50.6 | 47.2 |
| | Maximum | 71.7 | 49.5 | 58.3 | 65.8 | 67.6 | 65.2 | 60.2 | 50.4 |
| 5-ton | Minimum | 71.3 | 50.5 | 56.9 | 67.1 | 67.2 | 63.0 | 55.0 | 45.6 |
| | Intermediate | 71.3 | 50.0 | 59.4 | 67.0 | 65.9 | 63.1 | 56.2 | 48.5 |
| | Maximum | 77.1 | 54.6 | 65.6 | 71.6 | 72.6 | 70.1 | 65.4 | 54.4 |

**HEATING MODE**

| Tonnage | Speed | Total Unit Sound Rating (dBA) | Octave Band Spectrum Frequency (Hz) Analysis (dB) | | | | | | |
|---|---|---|---|---|---|---|---|---|---|
| | | | 125 | 250 | 500 | 1000 | 2000 | 4000 | 8000 |
| 2 Tons | Minimum | 55.4 | 46.9 | 46.9 | 48.8 | 50.5 | 46.9 | 42.1 | 33.5 |
| | Intermediate | 62.6 | 50.5 | 54.3 | 53.4 | 57.8 | 57.1 | 50.5 | 42.2 |
| | Maximum | 69.1 | 60.9 | 57.7 | 60.8 | 60.5 | 62.3 | 61.5 | 49.0 |
| 3 Tons | Minimum | 56.3 | 46.1 | 44.7 | 50.5 | 51.7 | 48.3 | 42.7 | 34.1 |
| | Intermediate | 62.8 | 48.3 | 52.5 | 54.5 | 58.9 | 55.5 | 55.8 | 49.3 |
| | Maximum | 68.8 | 49.5 | 59.9 | 61.0 | 63.9 | 61.5 | 62.7 | 49.4 |
| 4 Tons | Minimum | 64.1 | 45.6 | 48.9 | 57.7 | 60.8 | 57.5 | 49.8 | 45.4 |
| | Intermediate | 65.9 | 48.3 | 51.8 | 60.1 | 52.2 | 57.8 | 54.4 | 49.8 |
| | Maximum | 73.7 | 50.7 | 59.2 | 68.1 | 69.7 | 66.8 | 62.3 | 53.6 |
| 5-ton | Minimum | 72.8 | 50.1 | 57.5 | 68.9 | 68.5 | 63.8 | 56.0 | 48.0 |
| | Intermediate | 72.8 | 50.3 | 58.2 | 67.5 | 67.3 | 64.2 | 59.1 | 53.5 |
| | Maximum | 78.6 | 55.6 | 67.7 | 73.4 | 74.1 | 71.2 | 67.1 | 58.7 |

## *AHRI Ratings*

| Outdoor Unit | Indoor Units | | Cooling Ratings ^ | | | | TVA Ratings [3] | | Heating Ratings ^ | | | CFM | AHRI # |
|---|---|---|---|---|---|---|---|---|---|---|---|---|---|
| | Coils/Air Handlers | Furnaces | Total | Sens. | SEER [1] | EER [2] | Total | Sens. | Hi [4] | HSPF [5] | Low [6] | | |
| DZ18VC 0241A* | DV25PECB14A* | --- | 22,000 | 17,000 | 18.0 | 12.5 | 21,200 | 16,500 | 22,200 | 9.6 | 17,000 | 800 | 8687729 |
| | DV37PECC14A* | --- | 22,400 | 17,300 | 19.0 | 13.0 | 21,600 | 16,800 | 22,200 | 10.0 | 17,000 | 800 | 8687730 |
| DZ18VC 0361A* | DV37PECC14A* | --- | 33,000 | 27,000 | 16.0 | 10.5 | 31,800 | 26,400 | 32,400 | 9.0 | 26,200 | 1,230 | 8687731 |
| | DV59PECD14A* | --- | 33,600 | 27,400 | 18.0 | 11.0 | 32,400 | 26,800 | 32,800 | 10.0 | 26,600 | 1,260 | 8687732 |
| DZ18VC 0481A* | DV59PECD14A* | --- | 44,000 | 32,200 | 18.0 | 11.0 | 42,500 | 32,200 | 44,000 | 9.6 | 36,600 | 1,380 | 8687733 |
| | DV61PECD14A* | --- | 45,000 | 33,000 | 19.0 | 11.0 | 43,500 | 33,000 | 44,500 | 10.0 | 37,000 | 1,380 | 8687734 |
| DZ18VC 0601A* | DV59PECD14A* | --- | 52,000 | 38,500 | 17.0 | 11.0 | 50,000 | 37,600 | 53,000 | 9.6 | 43,000 | 1,640 | 8930691 |
| | DV61PECD14A* | --- | 53,000 | 39,000 | 18.0 | 11.0 | 51,000 | 38,500 | 53,500 | 10.0 | 43,500 | 1,640 | 8930690 |

^ Rated in accordance with ANSI/AHRI Standard 210/240

[1] Seasonal Energy Efficiency Ratio

[2] Energy Efficiency Ratio @ 80°F/ 67°F/ 95°F

[3] TVA Rating: BTU/h @ 75°F/ 63°F - 95°F

[4] Rated heating capacity at 47°F outdoor per AHRI 210/240

[5] HSPF = Heating Seasonal Performance Factor

[6] Heating capacity at 17°F outdoor

**Notes**

- Always check the S&R plate for electrical data on the unit being installed.
- When matching outdoor unit to indoor unit, use the piston supplied with the outdoor unit or that specified on the piston kit chart supplied with the indoor unit.
- EEP - Order from Service Dept. Part No. B13707-38 or new Solid State Board B13707-35S. Part No. B13707-38 is not interchangeable with B13707-35S. The Daikin brand gas furnace contains the EEP cooling time delay.

| Model # | Dimensions | | |
|---|---|---|---|
| | W” | D” | H” |
| DZ18VC0241A* | 29 | 29 | 38¼ |
| DZ18VC0361A* | 29 | 29 | 38¼ |
| DZ18VC0481A* | 35½ | 35½ | 38¼ |
| DZ18VC0601A* | 35½ | 35½ | 38¼ |

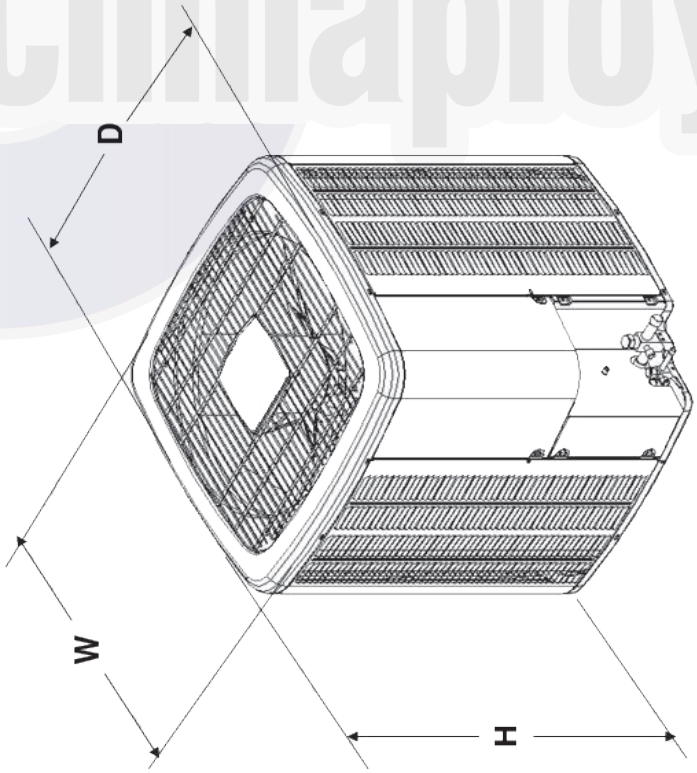


THE GOODMAN MANUFACTURING COMPANY, L.P.

DZ18VC

DRAWING TO BE INTERPRETED IN ACCORDANCE WITH ASME Y14.100

DIMENSIONS ARE IN INCHES UNLESS OTHERWISE NOTED

TOLERANCES
ANGLES ± 1/2°
X ± 1
XX ± 0.03
XXX ± 0.005
HOLE Ø ± 0.005
TUBE CUT LG ± 0.63

DWN BY: CL
CHK BY: PAMELA CYRILEN
ENG:

DO NOT SCALE DRAWING

SHT 1 OF 1

REV A

COMPONENTS AND MATERIALS SPECIFIED HEREIN WILL ALSO CONFORM TO THE APPLICABLE SECTION OF GOODMAN MSP 824.01 WORKMANSHIP STANDARD FOR FIT, FEEL, AND FINISH

CONFIDENTIAL PROPERTY OF THE GOODMAN MANUFACTURING COMPANY, L.P. NOT TO BE DISCLOSED TO OTHERS, COPIED, OR USED FOR ANY PURPOSE EXCEPT AS AUTHORIZED IN WRITING. MUST BE RETURNED UPON DEMAND, ON COMPLETION OF ORDER, OR OTHER PURPOSE FOR WHICH IT WAS LENT.

SPECIAL CHARACTERISTICS

= 6SIGMA

= CRITICAL CHARACTERISTIC

= SIGNIFICANT CHARACTERISTIC

Climaproyectos.com

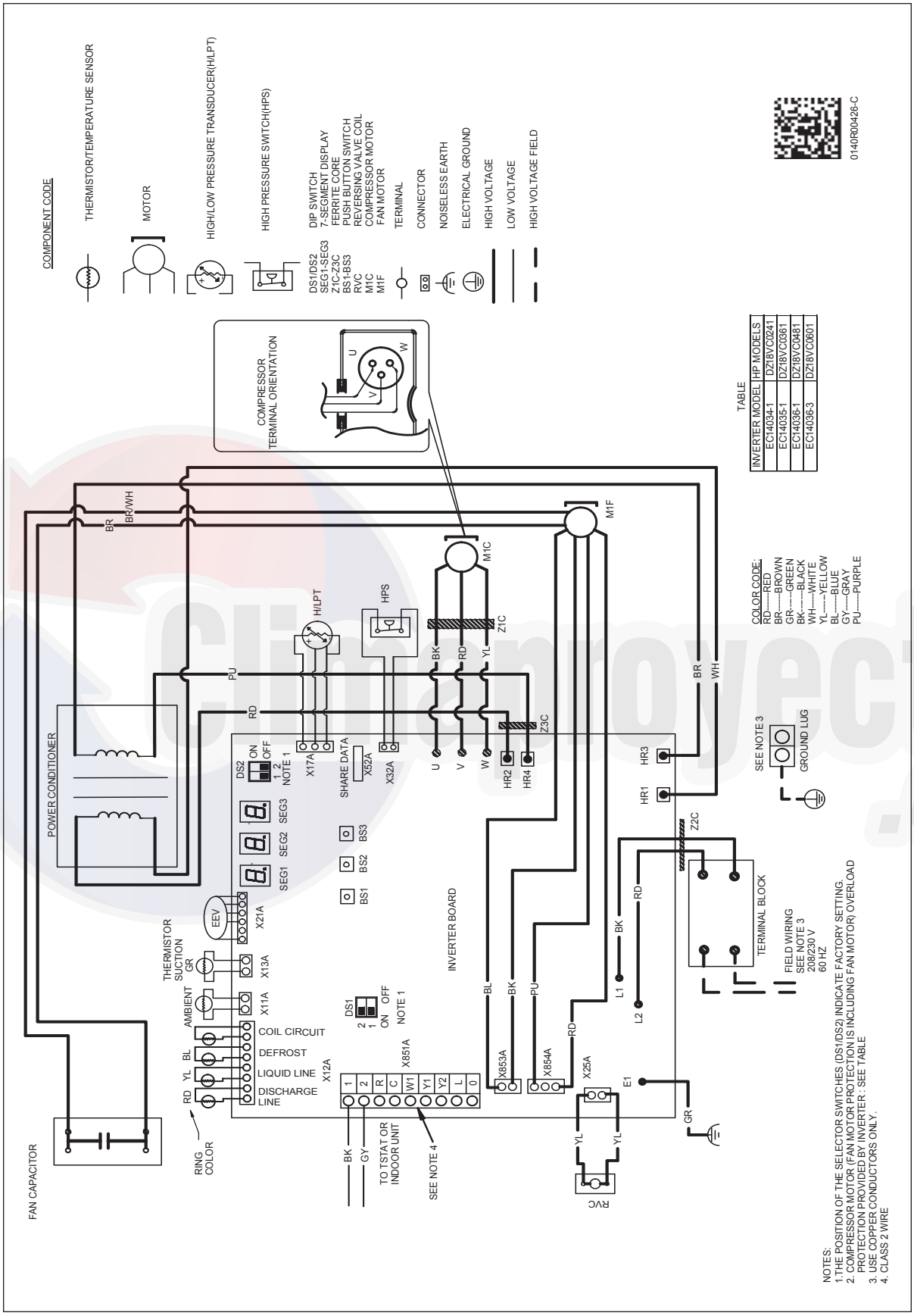


**WARNING** ***High Voltage:*** Disconnect all power before servicing or installing this unit. Multiple power sources may be present. Failure to do so may cause property damage, personal injury, or death.

Wiring is subject to change. Always refer to the wiring diagram or the unit for the most up-to-date wiring.

Our continuing commitment to quality products may mean a change in specifications without notice.
©2016 **DAIKIN MANUFACTURING COMPANY, L.P.** • Houston, Texas • Printed in the USA.